INTRODUCTION

INTRODUCTION

To bring better customer service and better spare parts supply, please note the following four points when refering to this Parts Catalog.

1. HOW TO USE THIS PARTS CATALOG

A. The Publication Number of this Parts Catalog is C–0020. Whenever quoting the Parts Catalog, tell us this Pub. No..

B. All spare parts available for Model G130, 130 series are included here.

C. Alphabetical section Index and Illustration Index appears on page 45 and 51.

D. Brief specifications of Model G130, 130 series appear on page 2.

E. Car Name and abbreviations in the applied model appear on page 14.

F. The Car Numbers, the Engine Numbers or the Dates in the Part Name column indicate the application of the parts which were changed. The location of the car No. and the engine No. appears on page 15.

G. Part Number Index is attached to the end of this Parts Catalog.

H. Alpharbetical Index is attached to the end of this Catalog.

II. HOW TO PLACE YOUR ORDERS FROM THE PARTS CATALOG (FOR DISTRIBUTOR USE ONLY)

A. Typewrite the spare parts which you are going to order on the given Nissan Spare Parts Order Sheet.

B. At least the Part Numbers and the Quantity must be filled in as accurately as possible. Otherwise our computer may reject your order.

C. In the case that you can not find the Part No. which you are going to order we shall be very glad to take care of this problem after verifying its availability. Therefore, place your order on another order sheet as a conditional order, which does not include a Ordinary order, telling us precisely the Part Name, the Place where it is attached and the Quantity - if it is a colored thing or material, attach a sample.

III. HOW TO COMPARE THE CONFIRMATION LIST AND THE PARTS CATALOG (FOR DISTRIBUTOR USE ONLY)

Although all parts contained here are in principle available for supply, if you find some parts hown in the Parts Catalog sorted F/ # U on the confimation list where the availability of your ordered parts are classified by our computer in respect to our stock control system, kindly tell us the Parts Numbers, the Pub. No. of the Parts Catalog (C–0020), and the Page. We shall be glad to inform you of the availability by the revised confirmation list as soon as possible.

IV. HOW TO ADAPT TO OUR PART NUMBER SYSTEM

In our parts supply system, the Part Number plays a key role. Therefore, you may print only the part numbers and the quantity as long as they do not cause mutual misunderstandings.

For this reason, kindly become familiar whith our Part Number System which appears on page 32.

© 1972 NISSAN MOTOR CO., LTD.

Printed in Japan

BRIEF SPECIFICATIONS

Model		'69 Year model	G(L) 130 / P(L) 130 / (L) 130 — SUPER, DELUXE / PERSONAL / STANDARD	WP(L) 130 (WAGON)	VP(L) 130 (VAN)	Q(L) 130 (DIESEL)
		'70 Year model	G(L) 130 / H(L) 130 / (L) 130 — SUPER, CUSTOM / P-DX / STANDARD	WH(L) 130 (WAGON)	VH(L) 130 (VAN-DX)	Q(L) 130 (DIESEL)
Item	Overall length		4,690 mm (184.7 in.)	4,690 mm (184.7 in.)	4,690 mm (184.7 in.)	4,690 mm (184.7 in.)
	Overall width		1,690 mm (66.5 in.)	1,690 mm (66.5 in.)	1,690 mm (66.5 in.)	1,690 mm (66.5 in.)
	Overall height		1,455 mm (57.3 in.)	1,470 mm (57.9 in.)	1,490 mm (58.7 in.)	1,465 mm (57.7 in.)
	Wheel base		2,690 mm (105.9 in.)	2,690 mm (105.9 in.)	2,690 mm (105.9 in.)	2,690 mm (105.9 in.)
	Tread-front		1,375 mm (54.1 in.)	1,375 mm (54.1 in.)	1,375 mm (54.1 in.)	1,375 mm (54.1 in.)
	Tread-rear		1,375 mm (54.1 in.)	1,375 mm (54.1 in.)	1,375 mm (54.1 in.)	1,375 mm (54.1 in.)
	Seating capacity		6	8	6+600 kg	6

B–C

© 1972 NISSAN MOTOR CO., LTD.

ENGINE

Model / Design	'70 year model				'69 year model	
	L24 6cyl. in line 4cycle O.H.C. Gasoline	L20(A) 6cyl. in line 4cycle O.H.C. Gasoline	H20 4cyl. in line 4cycle O.H.V. Gasoline	SD22 4cyl. in line 4cycle O.H.V. Diesel	L23 6cyl. in line 4cycle O.H.C. Gasoline	J20 6cyl. in line 4cycle O.H.V. Gasoline
Bore	83 mm (3.26 in.)	78 mm (3.07 in.)	87.2 mm (3.43 in.)	83 mm (3.35 in.)	83 mm (3.26 in.)	73 mm (2.87 in.)
Stroke	73.7 mm (2.90 in.)	69.7 mm (2.74 in.)	83 mm (3.26 in.)	100 mm (3.94 in.)	69.7 mm (2.74 in.)	78.6 mm (3.09 in.)
Displacement	2,393 cc (146.0 cu. in.)	1,998 cc (120.9 cu. in.)	1,982 cc (121 cu. in.)	2,164 cc (132 cu. in.)	2,262 cc (138 cu. in.)	1,973 cc (120 cu. in.)

FUEL SYSTEM; "HITACHI" dual barrel down draft type carburetor ("NIKKI" 130 (H20) series only); Mechanical type diaphragm pump: Wet paper element type air cleaner; Fuel tank capacity 65ℓ (17.2U.S. gal.) Sedan series and 57ℓ (15.1U.S. gal.) Wagon and Van series.

LUBRICATION SYSTEM; Pressure feed with full-flow cartridge type (paper element type Q130(SD22) series) oil filter; Gear type oil pump (Rotor type oil pump J20 engine only); Oil pan capacity 4.0ℓ(1.06 U.S. gal.) G130 (L23) series, 4.1ℓ (1.08 U.S. gal.) G130 (L24), H130, WH130 & VH130 (L20(A))series, 3.9ℓ(1.03 U.S. gal.) (W) (V) P130 (J20) series, 3.3ℓ (0.87 U.S. gal.) 130 (H20) series and 3.8ℓ (1.08 U.S. gal.) Q130 (SD22) series.

IGNITION SYSTEM; Coil and distributor with mechanical and vacuum control.

COOLING SYSTEM; Corrugated fin and tube type radiator with centrifugal pump; Pellet-type thermostat; Cooling water capacity 8.4ℓ(2.22 U.S. gal.) G130 (L23) series,9.5ℓ (2.1 U.S. gal.) G130 (L24), H130, H130, WH130 & VH130 (L20(A)) series, 8.2ℓ(2.17 U.S. gal.) (W)(V) P130 (J20) series, 7.7ℓ (2.03 U.S. gal.) 130 (H20) series and 9.1ℓ(2.38 U.S. gal.) Q130 (SD22) series for with heater.

ELECTRIC SYSTEM; 12 volt, 50 AH or 60 AH battery; 300W, 500W or 12V-40AH alternator with regulator; 12V-1.4HP magnetic shift starter (negative earth).

CLUTCH; Single, dry disc with diaphragm spring.

TRANSMISSION; 3 or 4 forward speeds and 1 reverse; All synchromeshed on forward gears; 3-speed automatic transmission.

Continued on page 4

© 1972 NISSAN MOTOR CO., LTD.

Printed in Japan

Type and application;

T/M type / Applied date	R3W71A (3 speed)		R4W71A (4 speed)		3N71A (Automatic)	
	'69 year model	'70 year model	'69 year model	'70 year model	'69 year model	'70 year model
T/M control method	Remote control					
Gear ratio 1st.	3.184		3.549		2.458	
Gear ratio 2nd.	1.641		2.197		1.458	
Gear ratio 3rd.	1.000		1.420		1.000	
Gear ratio 4th.	–		1.000		–	
Gear ratio Rev.	2.922		3.164		2.182	
Applied model	G(L)130 ··· (SUPER / P-2300) P(L)130 ··· (DELUXE / P-2000) WP(L)130...(WAGON) (L)130 .....(STD) Q(L)130.....(DIESEL)	G(L)130···(SUPER / P-DX2400) H(L)130···(CUSTOM / P-DX2000)	G130UX..(SUPER for SOUTH AFRICA) op G(L)130..(SUPER / P-2300) op GL130E..(SUPER, P-2300 / High speed area) VP(L)130-(VAN)	G130UX.....(SUPER for SOUTH AFRICA) GL130E.....(SUPER, P-DX2400 / High speed area) HL130E.....(CUSTOM, P-DX2000 / High speed area) (L)130(E).....(STANDARD) Q(L)130(E)....(DIESEL) WH(L)130(E)..(WAGON) VH(L)130(E)..(VAN-DX)	G(L)130A.... (SUPER / P-2300) P(L)130A.... (DELUXE / P-2000) WP(L)130A...(WAGON)	G(L)130A...(SUPER / P-DX2400) H(L)130VA-(CUSTOM) WH(L)130...(WAGON)

Final gear hypoid;

Applied model / Gear ratio	'69 year model	'70 year model
4.111	G(L) 130 V ..... (SUPER) G(L) 130 S ..... (P-2300) P(L) 130 UK ..... (DELUXE) PL 130 SU ..... (P-2000 L DRIVE) WP(L) 130 UK ..... (WAGON) L130 US ..... (STD L DRIVE) Q(L) 130 U ..... (DIESEL) op GL 130 V ..... (SUPER L DRIVE) op GL 130 SU ..... (P-2300 L DRIVE)	G(L) 130 U ..... (SUPER) G130 UX ..... (SUPER for SOUTH AFRICA) G(L) 130 QU ..... (P–DX 2400) H(L) 130 VU ..... (CUSTOM) H(L) 130 QU ..... (P–DX 2000) WH(L) 130 U ..... (WAGON) (L) 130 SU ..... (STD) Q(L) 130 U ..... (DIESEL)
4.375	P 130 SU ..... (P-2000 R DRIVE) 130 SU ..... (STD R DRIVE) VP(L) 130 U ..... (VAN) Q 130 U ..... (DIESEL R DRIVE) L 130 S ..... (STD L DRIVE)	VH(L) 130 U ..... (VAN)
3.889	GL 130 VE ..... (SUPER High speed area) GL 130 SE ..... (P-2300 High speed area) G 130 UX ..... (SUPER for SOUTH AFRICA) op G(L) 130 V ..... (SUPER) op G(L) 130 S ..... (P-2300)	GL 130 E ..... (SUPER High speed area) GL 130 QE ..... (P–DX 2400 High speed area) HL 130 VE ..... (CUSTOM High speed area) HL 130 QE ..... (P–DX 2000 High speed area) WHL 130 E ..... (WAGON High speed area)

B–C

© 1972 NISSAN MOTOR CO., LTD.

REVISED: DECEMBER, 1972

FRONT SUSPENSION; Independent with coil springs and torsion bar type stabilizer.

REAR SUSPENSION; Semi-elliptic spring and telescopic double acting shock absorbers.

STEERING; Right or left hand drive; Recirculating ball type; Ratio 19.8 : 1.

BRAKES; Front disc brake (G130V or G130U–Super–; H130V–CUSTOM–series), front 2 leading (G130S or G130Q–P–DX2400–, P130UK–DELUXE–, P130S–P-2000–, H130Q–P-DX2000–, WP130 or WH130–WAGON–, VP130 or VH130–VAN–, L130–STD– and Q130–DIESEL– series); Rear leading and trailing shoe; Brake drum dia. 241.3 mm (9.5 in.) and 250 mm (9.85 in.) (Disc) front, 241.3 mm (9.5 in.) rear; Parking brake mechanically operated on rear wheels only.

WHEELS AND TIRES; steel disc wheels; Tires (see below)

Applied date	Tire size	Applied model
'69 year model	7.00–13–4PR (WHITE)	G(L) 130V ..... (SUPER) G(L) 130S ..... (P-2300) P(L) 130UK ..... (DELUXE) P(L) 130S ..... (P-2000) WP(L)130 ..... (WAGON)
	7.00–13–4PR (BRACK)	(L) 130S ..... (STD) Q(L) 130 ..... (DIESEL)
	6.00–13–6PRLT & 6.00–13–8PRLT (WHITE)	VP(L) 130 ..... (VAN)
'70 year model	6.95–14–4PR (TUBELESS)	G(L) 130U ..... (SUPER) G(L) 130Q ..... (P-DX2400) H(L) 130V ..... (CUSTOM) H(L) 130Q ..... (P-DX2000)
	6.40–14–4PR	(L) 130S ..... (STD) Q(L) 130 ..... (DIESEL)
	6.00–13–6PRLT & 6.00–13–8PRLT	VH(L) 130 ..... (VAN-DX)

"LT" means light truck tire.

LAMPS; Two dual head lights (sealed beam)with dipping; two parking and turn signal lights; Two combined stop tail and turn signal lights; Room lights; Rear license light; Back-up lights; Side directional lights.

INSTRUMENTS; Speedometer with trip meter; Fuel gauge; Water temperature gauge; Ignition warning light; Oil pressure warning light; Turn signal pilot light; Main beam warning light; Parking brake warning light; Brake safety warning light; On instrument panel, ignition and starter switch, lighting switch, choke control knob, windshield wiper switch, Four-way flasher switch, fresh air control levers and glove box.

BODY WORKS; Four-door sedan; Five-seater with adjustable front semi-separate seat and bench seats; All steel body full upholstered with vinyl leather; Dual self-parking windshield wiper with washer; Room light, door switches on both sides; Turn signal lever with dimmer switch unit; Interior back mirror; Safety glass on all windows and doors; Door window curved glass; Two sunvisors; Ash trays, front and rear; Vinyl floor mat; Safety belt anchorages (front: 2 point and 3 point, rear: lap); Fuel tank filler cap lock; Trunk floor mat; Moulding sill, windshield, back window, drip channel; Rear door pull handle (super, deluxe only); Full flow ventilator.

EQUIPMENT APPLICATION

Applied date / Car name / Equipment (alphabetical order)	'69 year model						'70 year model					
	SUPER	DELUXE	PERSONAL	STD & DIESEL	WAGON	VAN	SUPER	CUSTOM	PERSONAL DELUXE	STD DIESEL	WAGON	VAN-DX
Anti-sun glass	○	○	op	op	○	op	○	○	○	×	○	○
Assist side sunvisor	○	○	op	op	○	op	○	○	op	op	○	op
Assist strup (rear)	○	○	op	op	op	op	○	○	op	op	op	op
Back window moulding	○	○	○	×	○	○	○	○	○	×	○	○
Battery (100 A.H)	×	×	×	op★	×	×	×	×	×	op★	×	×
Cigarette lighter	○	○	op	op	op	op	○	○	op	op	op	op
Coat hanger	○	○	op	op	op	op	○	○	op	op	op	op

© 1972 NISSAN MOTOR CO., LTD.

Printed in Japan

Applied date / car name / Equipment (alphabetical order)	'69 year model						'70 year model					
	SUPER	DELUXE	PERSONAL	STD & DIESEL	WAGON	VAN	SUPER	CUSTOM	PERSONAL DELUXE	STD & DIESEL	WAGON	VAN-DX
Collapsible steering	op	op	op	op	op	op	op	op	op	op	op	op
Drip channel moulding	○	○	○	×	○	×	○	○	○	×	○	×
Floar carpet	○	○	○	×	○	×	○	○	○	×	○	×
Floor vinyl mat	×	×	×	○	×	○	×	×	×	○	×	○
Front disc brake & master vac(9")	op	op	op	×	×	×	○	○	op	×	×	×
G valve	×	×	×	×	×	×	○	×	×	×	×	×
Master vac (6")	○	○	op	op☆	op	op	×	×	op	op☆	op	op
Outside rear view mirror on floor	op *	op *	op *	op *	op *	op *	op *	op *	op *	op *	op *	op *
Outside rear view mirror on fender	op *	op *	op *	op *	op *	op *	op *	op *	op *	op *	op *	op *
Package tray	○	○	op	op	○	op	○	○	op	op	○	op
Power steering	×	×	×	×	×	×	op (RD)	×	×	×	×	×
Spare wheel cover	○	○	op	op	op	op	○	○	op	op	op	op
Steering lock	op	op	op	op	op	op	○	○	○	op(LD) ×(RD)	○	op
Tandem master cylinder	○	op	op	op	op	op	○	○	op	op	op	op
Tire (white sidewall)	○	○	○	op	○	op	○	○	op	op	○	op
Trip recorder	○	○	op	op	op	op	○	○	op	op	op	op
Trunk room mat	○	○	×	×	×	×	○	○	×	×	×	×
Trunk room side trim	○	○	×	×	×	×	○	○	×	×	×	×

○ ..... Standard equipment

× ..... Not available

op ..... Factory optional equipment

* ..... Optional equipment which shold be installed at distributor

op★ ..... Optional equipment for "DIESEL" only

op☆ ..... Optional equipment for "STD DRIVE" only

OPTIONAL PARTS FOR ALL MODELS; Heater; Car cooler; Clock; Radio; Safety seat belt (front and rear); 4 way flasher; Passing light; Steering lock (for '69 year model); Long life coolant 50% (–35°C, –31°F); Tubeless tire (for '69 year model) Anti-lift wiper blade; 60 A.H. battery; Head restraint (front and rear); Safety inside back mirror.

These specifications are subject to change without notice.

B–C

© 1972 NISSAN MOTOR CO., LTD.

EXPLANATION OF EACH COLUMN

PART CATALOG

1. 'S' column (preceding the KEY No. column)
(DISTRIBUTOR USE ONLY)

* ..... Signifies that the part no. has been removed.
If the part no. A is preceded by "*", the part no.A appears in the SUPERSEDED column of the part no. B.
In this case the part no. B is the superseding part of the part no. A.

..... The parts preceded by "#" are conditional order items. Place the order as specified in the Nissan Parts S.O.P..

2. KEY NO. column

A KEY NO. consists of 5 digits.
The first 3 digits play the role of connecting the part no. to the part in the Illustration.
When the first 3 digits are blank, it means the same key number as above. The last 2 digits are merely suffix to show the sequence.
The KEY NOS. may be changed at each revision.

3. PART NO. column

PART NO. is as a rule ten digits.
However, 12-digit PART NO. may rarely appear.
Moreover PART NO. column shows level of the component parts as below;

	PART NO.	
	. . . .	
	—	ASSEMBLY
	—	SUBASSEMBLY-A
	—	COMPONENT-A
	—	COMPONENT-B
	—	COMPONENT-C
	—	SUBASSEMBLY-B

ASSEMBLY includes SUBASSEMBLY-A and SUBASSEMBLY-B.
SUBASSEMBLY-A includes COMPONENT-A.
COMPONENT-A includes COMPONENT-B and COMPONENT-C.

4. DESCRIPTION column

Part name is shown in this column.
"INC" is the abbreviation of "including".

5. Q'TY column

The quantity in this column shows the pieces of the part used in the section.
"AR" is the abbreviation of "as required".

6. UNIT PKG column (DISTRIBUTOR USE ONLY)

UNIT PKG column indicates the pieces which are contained in a packing box.
Place the order for a part multiplying its unit package (ex. UNIT PKG 10---- make your order by 10,20,30,----).
Then you will receive the part in a form easily to be stored into the bin.

7. APPLIED MODEL column

Applied model is described in this column.

8. APPLIED DATE column

In case of the annual model change, the applied date is used as the abbreviation in stead of the actual Car No. or Engine No..
The APPLIED DATE column signifies this applied date. For example, from "10 69" stands for 1970 year model and you can find the actual Car No. by referring to the "Car No. and Engine No." section in the introduction.
On those pages, the applied date and actual Car Nos. are described together with picture of the annual model.
If "NOTE" appears in the APPLIED DATE column, see NOTE column at the foot of the page.
You can find the actual Car No. or Engine No. there.

© 1972 NISSAN MOTOR CO., LTD.

Printed in Japan

9. ICA column

ICA is the abbreviation of Interchangeability.

9-1 N column

The code in the N column signifies whether the part in the PART NO. column is substitutive for the part in the SUPERSEDED column or not.

9-1 F column

The code in the F column signifies whether the part in the SUPERSEDED column is substitutive for the part in the PART NO. column or not.

"Y" is the abbreviation of Yes (i.e. Substitutive)
"N" is the abbreviation of No (i.e. Not Substitutive)
"C" is the abbreviation of Condition (i.e. Substitutive with condition)

In the case of "C", the details of the condition are described in the NOTE column or ILLUSTRATION.

10. SUPERSEDED column

This column signifies the superseded part no. of the part in the PART NO. column.

11. CAR NAME AND ABBREVIATIONS IN THE APPLIED MODEL

The car name and abbreviations used in the applied model column are as follows. These car name are taken by each model type, equipment (i.e. Deluxe and Standard), the position of steering wheel, the transmission system, the displacement of the engine, sedan or wagon and the destinations.

Car name and abbreviations ('69 year model);

Car name	Model	Part type	Style	Handle
SUPER	G130-V	– E17	4 DOOR SEDAN	Right hand drive (R Drive or R D)
SUPER (SOUTH AFRICA)	G130-UX	– E17		
DELUXE	P130-UK	– E02		
P-2300	G130-S	– E17		
P-2000	P130-SU	– E03		
STANDARD (or STD)	130-SU	– E07		
DIESEL	Q130-U	– E09		
WAGON	WP130-UK	– E05	WAGON & VAN	
VAN	VP13-U	– E04		
SUPER	GL130-V	– E18	4 DOOR SEDAN	Left hand drive (L Drive or L D)
SUPER (SOUTH AFRICA)	GL130-VE	– E18		
DELUXE	PL130-UK	– E12		
P-2300	GL130-S	– E18		
P-2000	PL130-SU	– E18		
STANDARD (or STD)	L130-SU	– E13		
DIESEL	QL130-U	– E19		
DIESEL	QL130-UE	– E19		
WAGON	WPL130-UK	– E15	WAGON & VAN	
VAN	VPL130-U	– E14		

E means "USE for HIGH SPEED AREA".

continued on page 9

© 1972 NISSAN MOTOR CO., LTD.

B–C

Car name and abbreviations ('70 year model);

Car name	Model	Part type	Style	Handle
SUPER	G 130-U	– E31	4 DOOR SEDAN	Right hand drive (R Drive or R D)
SUPER (SOUTH AFRICA)	G 130-UX	– E31		
CUSTOM	H 130-VU	– E30		
P-DX 2400	G 130-QU	– E31		
P-DX 2000	H 130-QU	– E30		
STANDARD (or STD)	130-SU	– E34		
DIESEL	Q 130-U	– E34		
WAGON	WH 130U	– E35	WAGON & VAN	
VAN-DX	VH 130-U	– E35		
SUPER	GL 130	– E33	4 DOOR SEDAN	Left hand drive (L Drive or L D)
SUPER	GL 130 E	– E33		
CUSTOM	HL 130-V	– E36		
CUSTOM	HL 130-VE	– E36		
P-DX 2400	GL 130-Q	– E33		
P-DX 2400	GL 130-QE	– E33		
P-DX 2000	HL 130-Q	– E36		
P-DX 2000	HL 130-QE	– E36		
STANDARD (or STD)	L 130-S	– E37		
DIESEL	QL 130	– E37		
WAGON	WHL 130	– E38	WAGON & VAN	
WAGON	WHL 130 E	– E38		
VAN-DX	VHL 130	– E38		

E means "USE for HIGH SPEED AREA"

© 1972 NISSAN MOTOR CO., LTD.

Printed in Japan

Classification of car name in the applied model;

Style group ('69 year model)

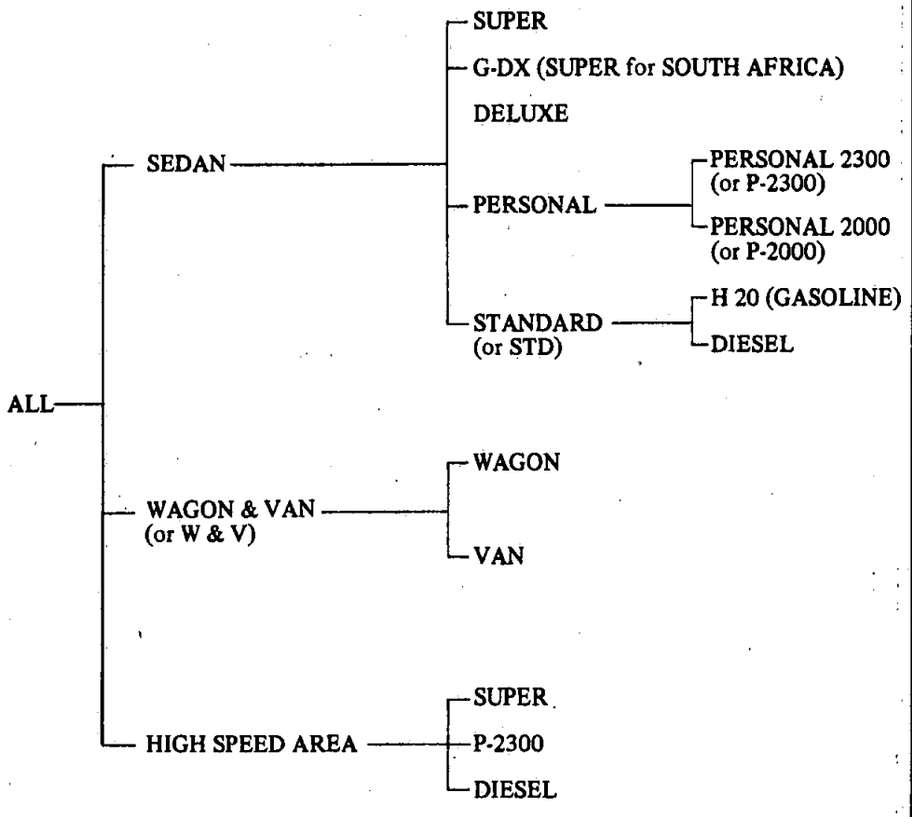

Style group ('70 year model)

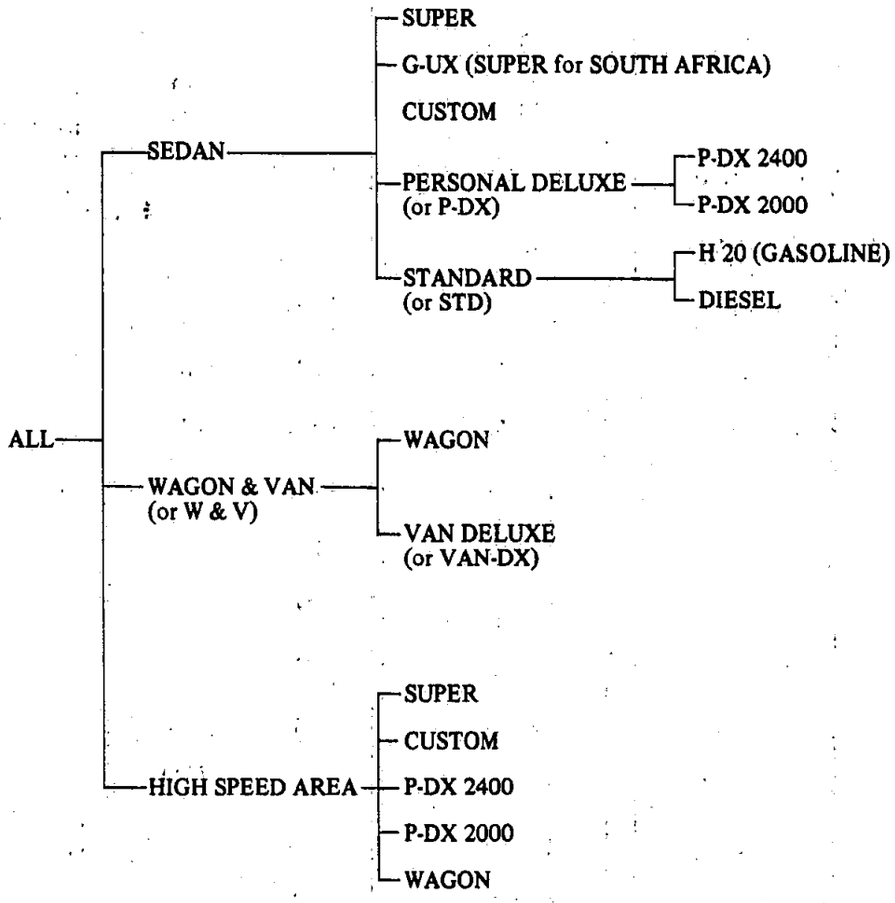

B–C

© 1972 NISSAN MOTOR CO., LTD.

B–C

Handle group ('69 year model)

- ALL
  - R DRIVE or R D
    - SEDAN (R DRIVE)
      - SUPER (R DRIVE)
      - G-UX (SUPER for SOUTH AFRICA) (R DRIVE)
      - DELUXE (R DRIVE)
      - PERSONAL (R DRIVE)
        - PERSONAL 2300 or P-2300 (R DRIVE)
        - PERSONAL 2000 or P-2000 (R DRIVE)
      - STANDARD or STD (R DRIVE)
        - H20 (GASOLINE R DRIVE)
        - DIESEL (R DRIVE)
    - WAGON & VAN or W & V (R DRIVE)
      - WAGON (R DRIVE)
      - VAN (R DRIVE)
  - L DRIVE or L D
    - SEDAN (L DRIVE)
      - SUPER (L DRIVE)
      - DELUXE (L DRIVE)
      - PERSONAL (L DRIVE)
        - PERSONAL 2300 or P-2300 (L DRIVE)
        - PERSONAL 2000 or P-2000 (L DRIVE)
      - STANDARD or STD (L DRIVE)
        - H20 (GASLOINE L DRIVE)
        - DIESEL (L DRIVE)
    - HIGH SPEED AREA
      - SUPER (L DRIVE)
      - P-2300 (L DRIVE)
      - DIESEL (L DRIVE)

Handle group ('70 year model)

- ALL
  - R DRIVE or R D
    - SEDAN (R DRIVE)
      - SUPER (R DRIVE)
      - G-UX (SUPER for SOUTH AFRICA) (R DRIVE)
      - CUSTOM (R DRIVE)
      - PERSONAL DELUXE or P-DX (R DRIVE)
        - P-DX2400 (R DRIVE)
        - P-DX2000 (R DRIVE)
      - STANDARD or STD (R DRIVE)
        - H20 (GASOLINE R DRIVE)
        - DIESEL (R DRIVE)
    - WAGON & VAN or W & V (R DRIVE)
      - WAGON (R DRIVE)
      - VAN DELUXE or VAN–DX ((R DRIVE)
  - L DRIVE or L D
    - SEDAN (L DRIVE)
      - SUPER (L DRIVE)
      - CUSTOM (L DRIVE)
      - PERSONAL DELUXE or P-DX (L DRIVE)
        - P-DX2400 (L DRIVE)
        - P-DX2000 (L DRIVE)
      - STANDARD or STD ((L DRIVE)
    - WAGON & VAN or W & V (L DRIVE)
      - WAGON (L DRIVE)
      - VAN DELUXE or VAN-DX (L DRIVE)
        - H20 (GASOLINE L DRIVE)
        - DIESEL (L DRIVE)
    - HIGH SPEED AREA
      - SUPER (L DRIVE)
      - CUSTOM (L DRIVE)
      - P-DX2400 (L DRIVE)
      - P-DX2000 (L DRIVE)
      - WAGON (L DRIVE)

© 1972 NISSAN MOTOR CO., LTD.

Printed in Japan

Engine group ('69 year model)

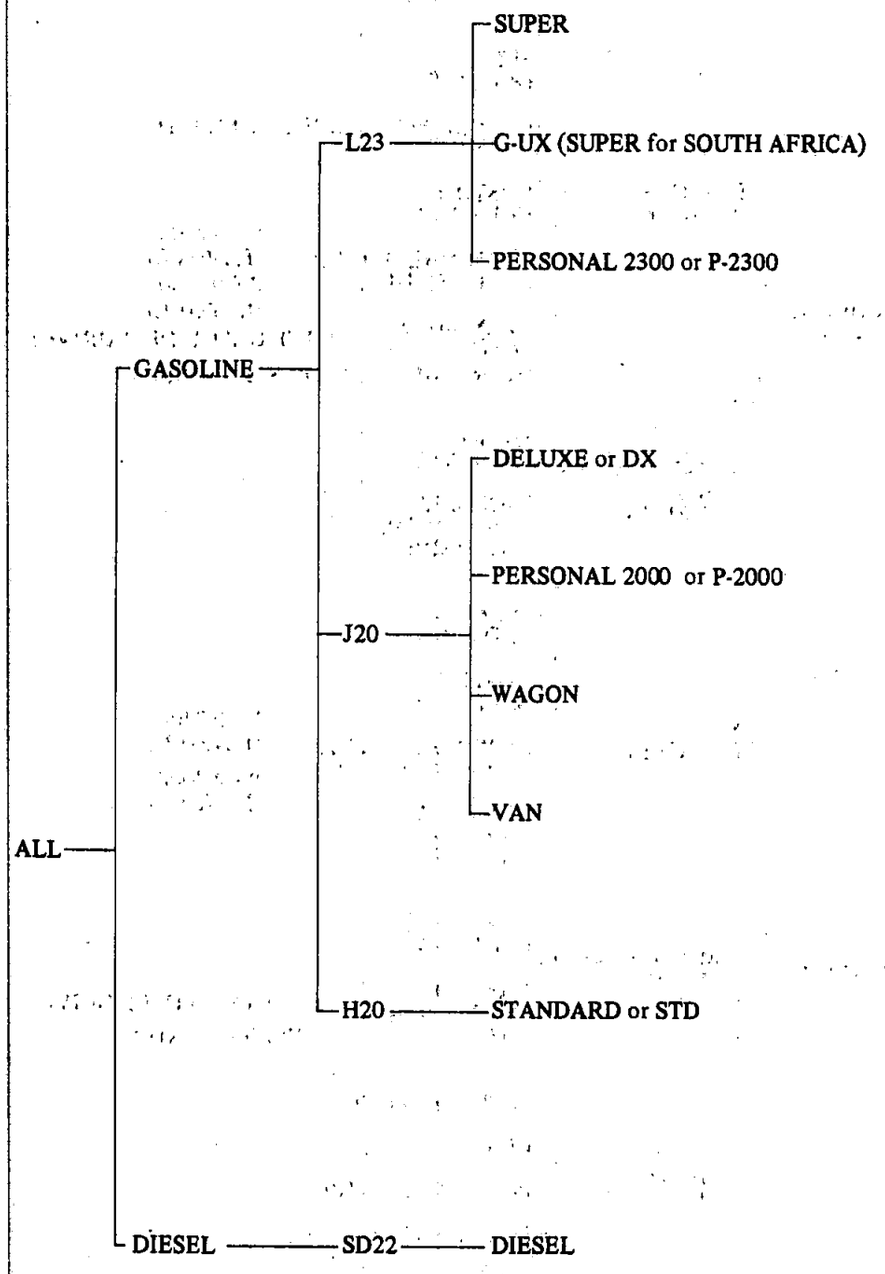

Engine group ('70 year model)

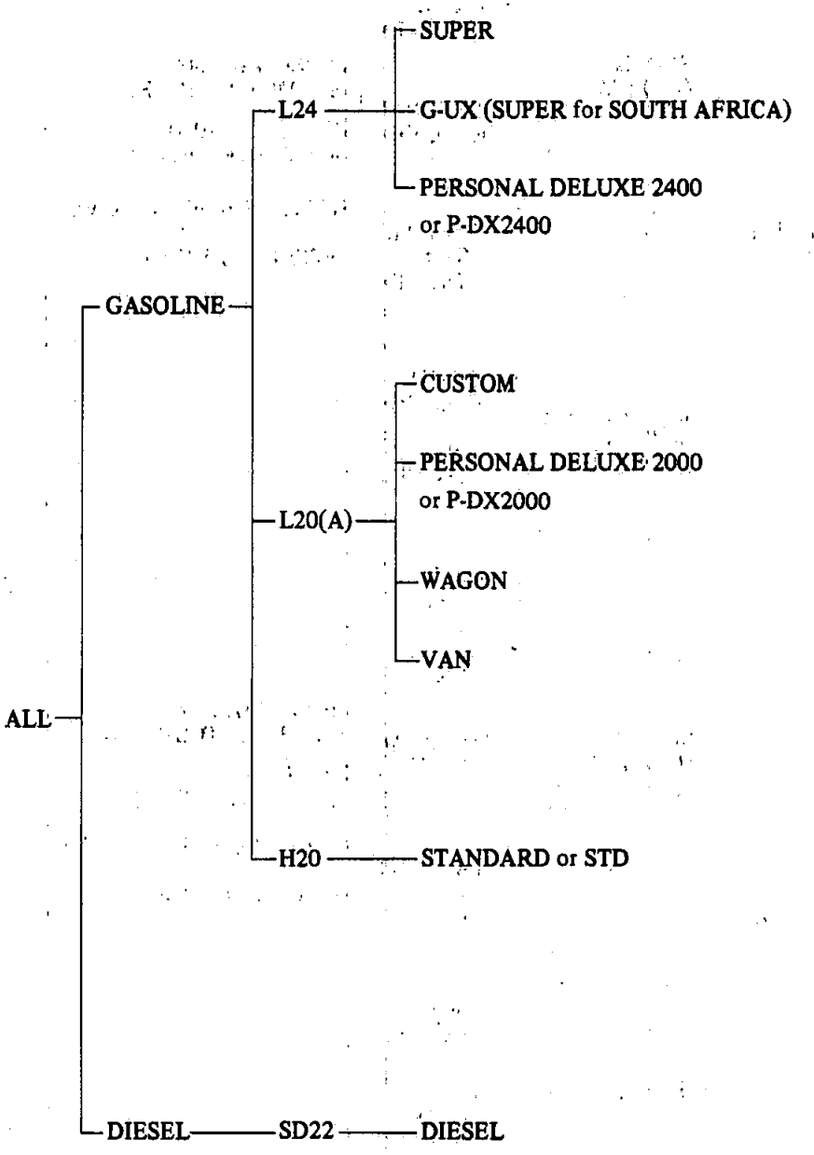

B–C

© 1972 NISSAN MOTOR CO., LTD.

B–C

Transmission group (69 year model)

- ALL
  - MANUAL
    - 3 SPEED (R3W71A)
      - SUPER
      - DELUXE or DX
      - PERSONAL
        - P-2300
        - P-2000
      - STANDARD or STD
      - DIESEL
      - WAGON
    - 4 SPEED (R4W71A)
      - G-UX (SUPER for SOUTCH AFRICA)
      - SUPER (OPTION)
      - SUPER (High speed area)
      - P-2300 (High speed area)
      - VAN
  - AUTOMATIC or AUTO
    - 3 SPEED (3N71A)
      - SUPER
      - DELUX
      - PERSONAL
        - P-2300
        - P-2000
      - WAGON

Transmission group ('70 year model)

- ALL
  - MANUAL
    - 3 SPEED (R3W71A)
      - SUPER
      - CUSTOM
      - P-DX
        - P-DX2400
        - P-DX200
    - 4 SPEED (R4W71A)
      - G-UX (SUPER for SOUTH AFRICA)
      - HIGH SPEED AREA
        - SUPER
        - CUSTOM
        - P-DX2400
        - P-DX2000
        - WAGON
      - VAN
  - AUTOMATIC or AUTO
    - 3 SPEED (3N71A)
      - SUPER
      - CUSTOM
      - P-DX
        - P-DX2400
        - P-DX2000
      - WAGON

© 1972 NISSAN MOTOR CO., LTD.

Printed in Japan

CAR NAME & GROUP SYMBOLS

ALL ..... The part is used on all types of Datsun 2400, Datsun 2300 Sedan, Datsun 2000 Sedan, wagon and Van G130 and 130 model.

SUPER ..... The part is used on super six type of Datsun Sedan G130 model.

G–UX ..... The Part is used on super six type of Datsun Sedan G130 model for SOUTH AFRICA.

CUSTOM ..... The part is used on custom six type of Datsun Sedan H130 model ('70 year model).

DELUXE (or DX) ..... The part is used on deluxe type of Datsun 2000 Sedan 130 model ('69 year model).

PERSONAL DELUXE (or P-DX) ..... The part is used on personal deluxe six type of Datsun 2400 Sedan G130 and H130 model ('70 year model).

PERSONAL ..... The part is used on personal six type of Datsun 2300 and Datsun 2000 Sedan G130 and model ('69 year model).

P-DX 2400 ..... The part is used on personal deluxe six type of Datsun 2400 Sedan G130 model ('70 year model).

PERSONAL 2300 (or P-2300) ..... The part is used on personal six type of Datsun 2300 Sedan G130 model ('69 year model).

P-DX 2000 ..... The part is used on personal deluxe six type of Datsun 2000 Sedan H130 model ('70 year model).

PERSONAL 2000 (or P-2000) ..... The part is used on personal six type of Datsun 2000 Sedan 130 model ('69 year model).

STANDARD (or STD) ..... The part is used on standard type of Datsun 2000 Sedan 130 model.

SEDAN ..... The part is used on G130 and 130 Sedan.

WAGON ..... The part is used on 130 Wagon.

VAN DELUXE (or VAN-DX) ..... The part is used on H130 Van Deluxe ('70 year model).

VAN ..... The part is used on 130 Van ('69 year model).

W & V ..... The part is used on 130 Wagon and Van or Wagon and Van Deluxe.

R DRIVE (or RD) ..... The part is used on all right hand drive G130 and 130 model.

L DRIVE (or LD) ..... The Part us used on all left hand drive G130 and 130 model.

3 SPEED ..... The part is used on G130 and 130 model with a 3-speed manual transmission.

4 SPEED ..... The part is used on G130 and 130 model with a 4-speed manual transmission.

MANUAL ..... The part is used on G130 and 130 model with a manual transmission.

AUTOMATIC (or AUTO) The part is used on G130 and 130 model with an automatic transmission.

L24 ..... The part is used on G130 model with a 2,393 cc (146.9 cu. in.) engine ('70 year model).

L23 ..... The part is used on G130 model with a 2,262 cc (138.0 cu. in.) engine ('69 year model).

L20(A) ..... The parts is used on H130, WH130 & VH130 model with a 1,998 cc (120.9 cu. in.) engine ('70 year model).

J20 ..... The part is used on 130 model with a 1,973 cc (120.0 cu. in.) engine ('69 year model).

H20 ..... The part is used on 130 model with a 1,982 cc (121.0 cu. in.) engine.

SD22 ..... The part is used on 130 model with a 2,164 cc (132.0 cu. in.) engine.

EXC ..... "EXC" signifies "except", Accordingly, "ALL EXC USA" means that the part is used on G130 and 130 model except for the U.S.A.

ONLY ..... "ONLY" is used together with the destination. For example, AUSTRALIA ONLY means that the part is exclusively used for Australia.

OP ..... "OP" signifies the part is optionally equipped.

B–C

© 1972 NISSAN MOTOR CO., LTD.

CAR NO. AND ENGINE NO.

To choose the right parts, always refer to the car Nos. or Engine Nos., which are located in the engine room (see below).

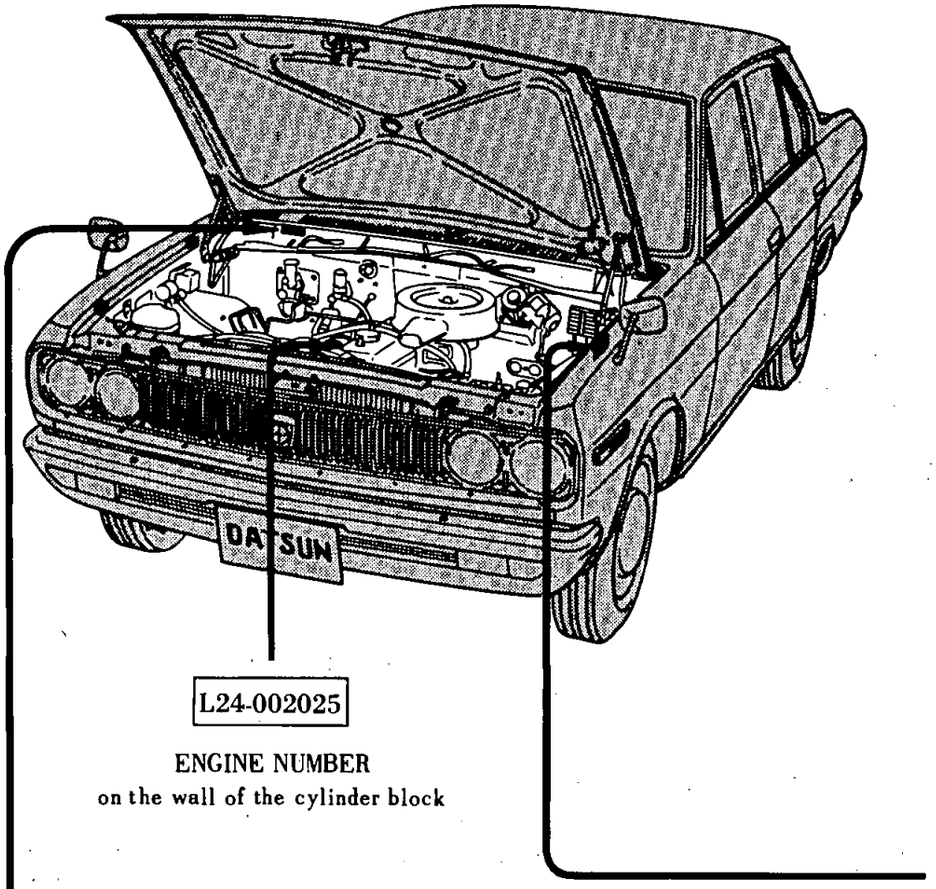

TYPE PLATE
(CAR NUMBER PLATE)
attached to the hood ledge

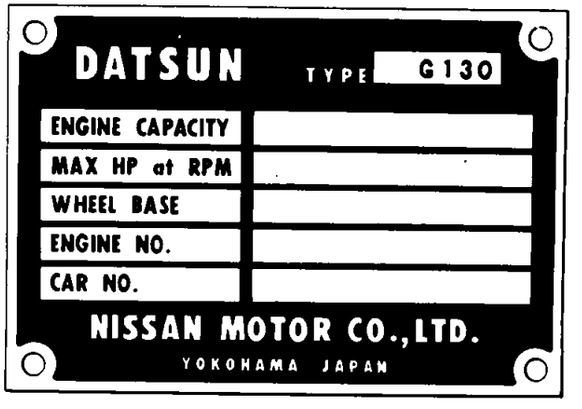

REVISED: DECEMBER, 1972
© 1972 NISSAN MOTOR CO., LTD.

Printed in Japan

DATSUN 2300 Super Six

MODEL G(L)130-V

(from SEP-'68)

(from C/# G130-000011
from C/# GL130-000001)

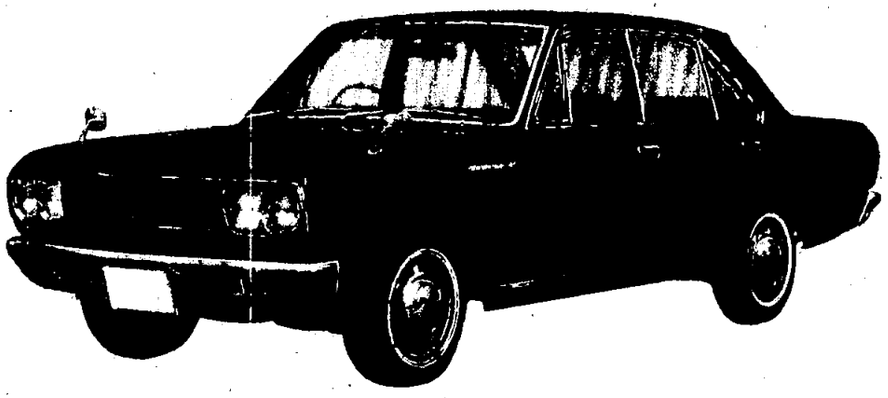

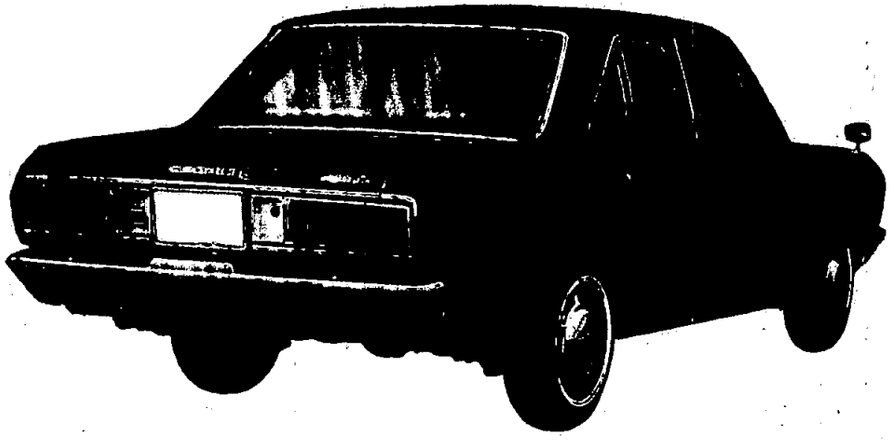

© 1972 NISSAN MOTOR CO., LTD.

REVISED: DECEMBER, 1972

DATSUN 2000 Deluxe Six

MODEL P(L)130-U

(from SEP-'68)

(from C/# P130-038001)
(from C/# PL130-003601)

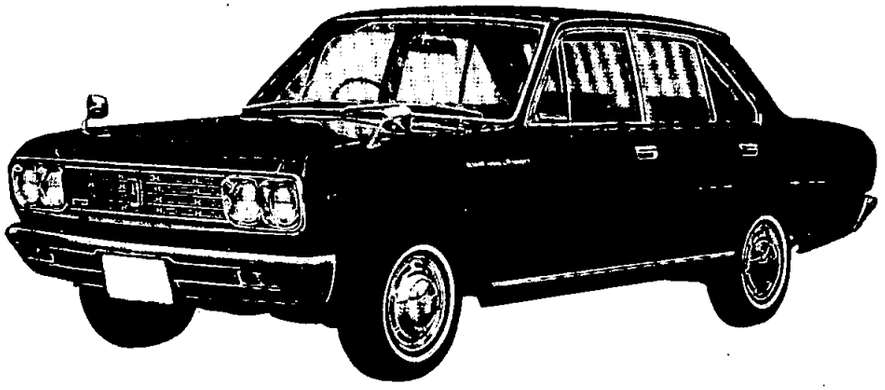

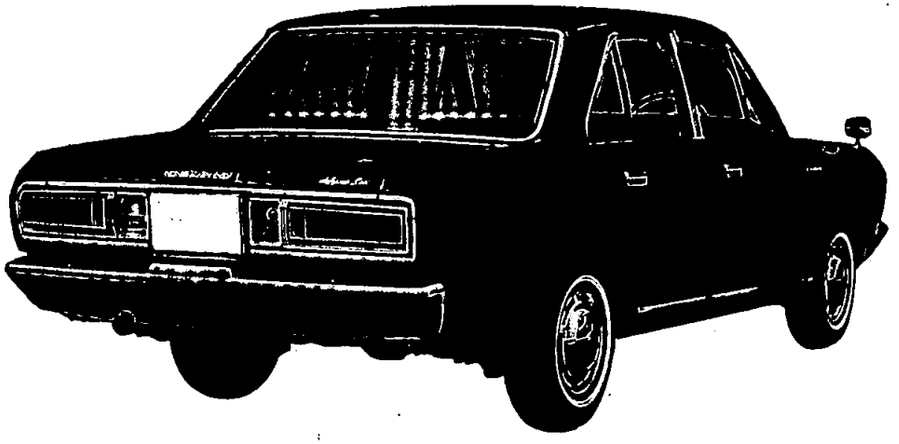

©1972 NISSAN MOTOR CO., LTD.

Printed in Japan

DATSUN 2300 Personal Six

MODEL G(L)130-S

(from SEP-'68)

(from C/# G130-000011)
(from C/# GL130-000001)

B–C

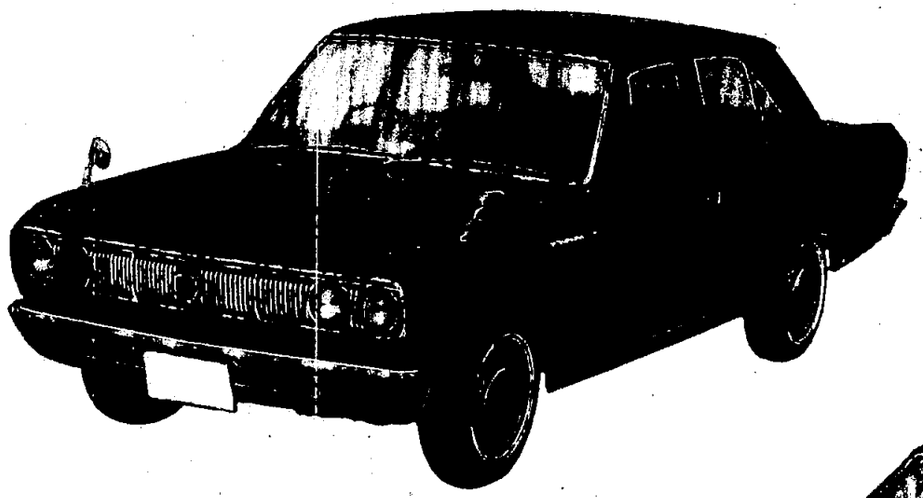

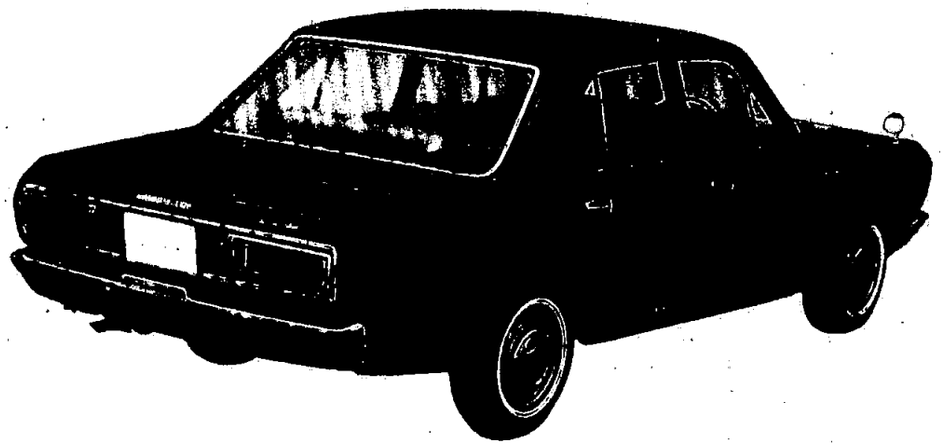

© 1972 NISSAN MOTOR CO., LTD.

REVISED: DECEMBER, 1972

DATSUN 2000 Personal Six

MODEL P(L)130-SU

(from SEP-'68)

(from C/# P130-038001)
(from C/# PL130-003601)

B–C

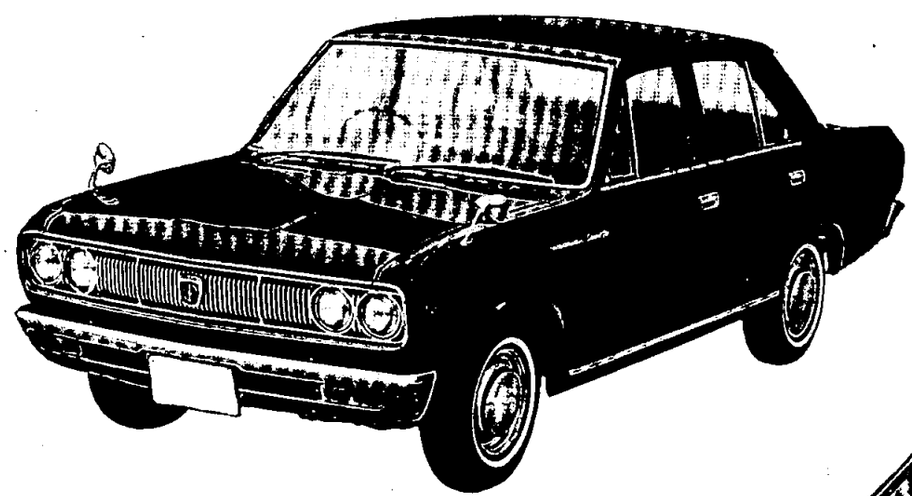

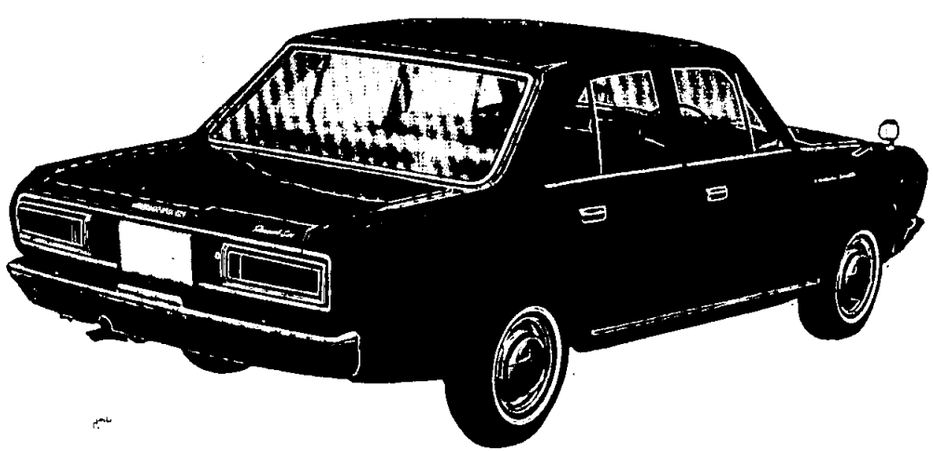

REVISED: DECEMBER, 1972
© 1972 NISSAN MOTOR CO., LTD.

Printed in Japan

DATSUN 2000

MODEL 130-SU, L130-S

(from OCT-'69)

(from C/# 130-070001
from C/# L130-003501)

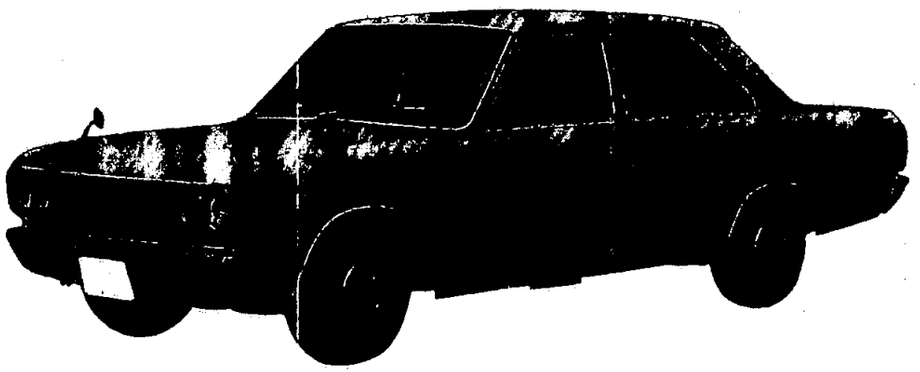

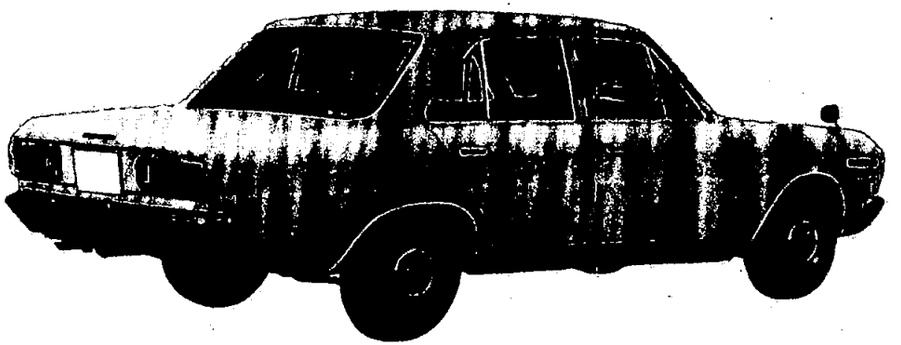

© 1972 NISSAN MOTOR CO., LTD.

REVISED: DECEMBER, 1972

DATSUN Diesel

MODEL Q(L)130-U

(from SEP-'68)

(from C/# Q130-004001
from C/# GL130-000301)

B–C

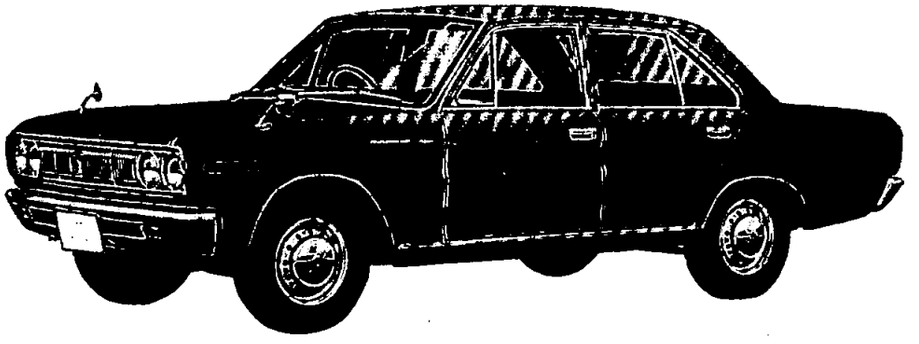

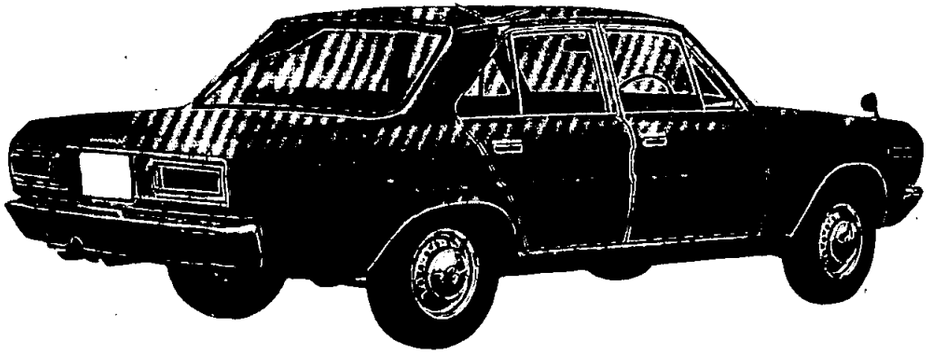

© 1972 NISSAN MOTOR CO., LTD.

Printed in Japan

DATSUN 2000 Wagon Six

MODEL WH130-U, WHL130

(from OCT-'69)

(from C/# H130-068001
from C/# HL130-001001)

B—C

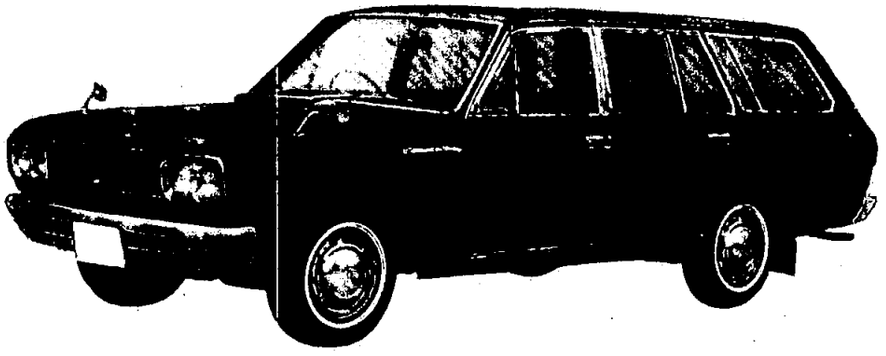

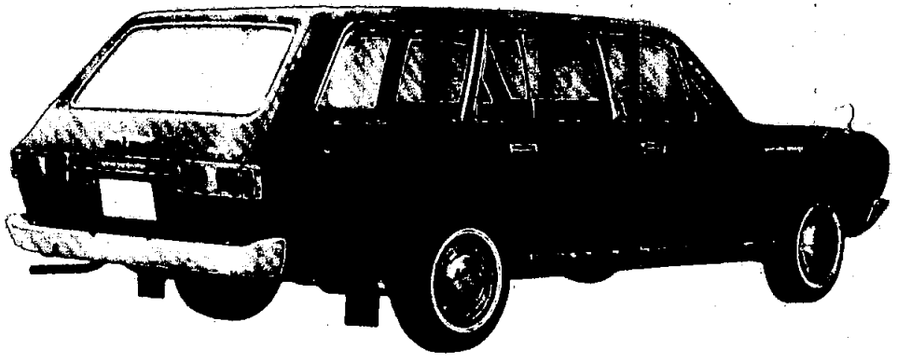

© 1972 NISSAN MOTOR CO., LTD.

REVISED: DECEMBER, 1972

DATSUN 2000 Six

MODEL VP(L)130-U

(from SEP-'68)

(from C/# VP130-711001)
(from C/# VPL130-701201)

B–C

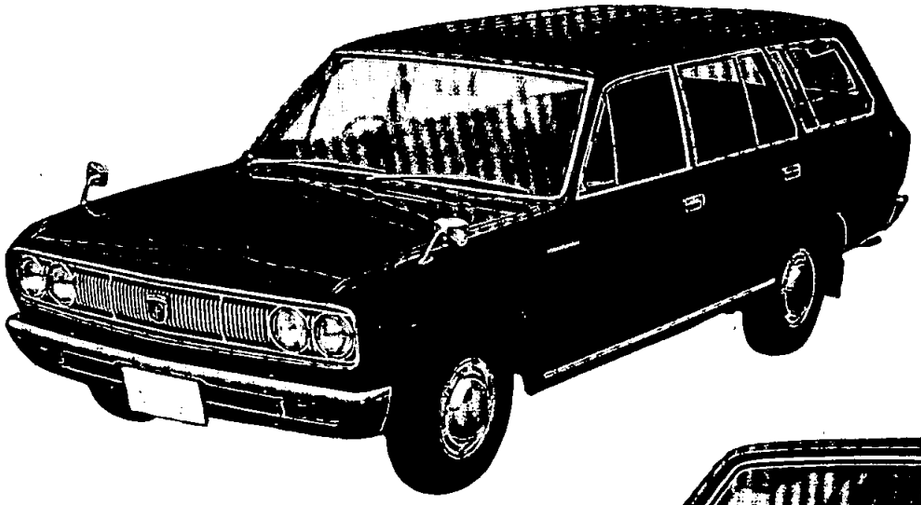

© 1972 NISSAN MOTOR CO., LTD.

Printed in Japan

DATSUN 2400 Super Six

MODEL G130-U, GL130

(from OCT-'69)

(from C/# G130-005001
from C/# GL130-000601)

B—C

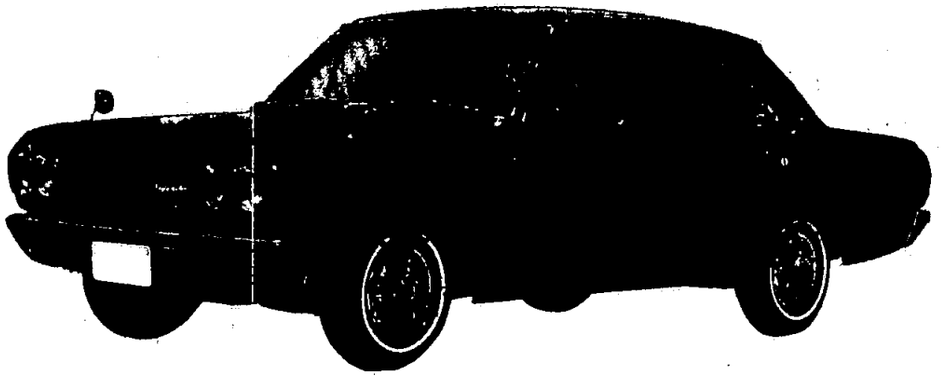

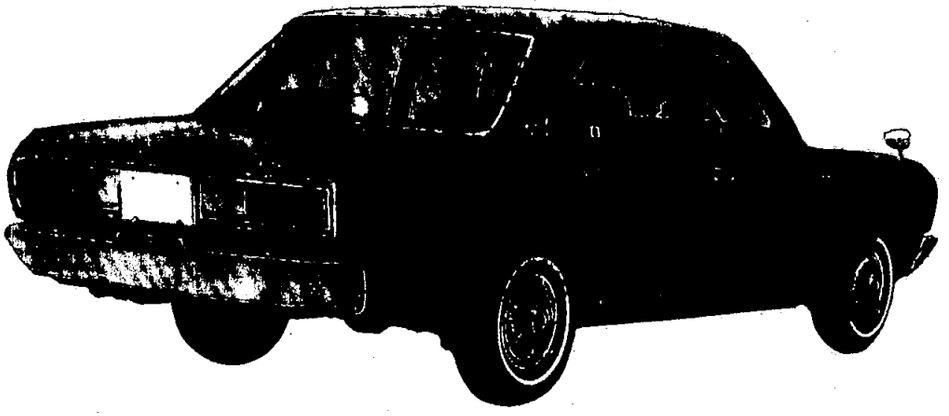

© 1972 NISSAN MOTOR CO., LTD.

REVISED: DECEMBER, 1972

DATSUN 2000 Custom Six

MODEL H130-VU, HL130-V

(from OCT-'69)

(from C/# H130-068001)
(from C/# HL130-001001)

B–C

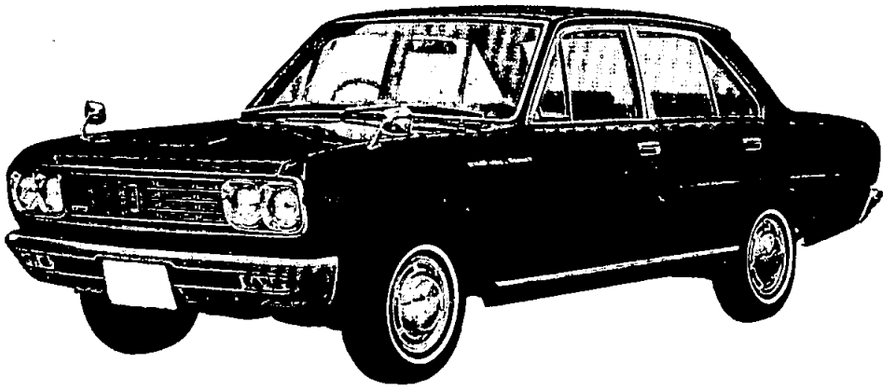

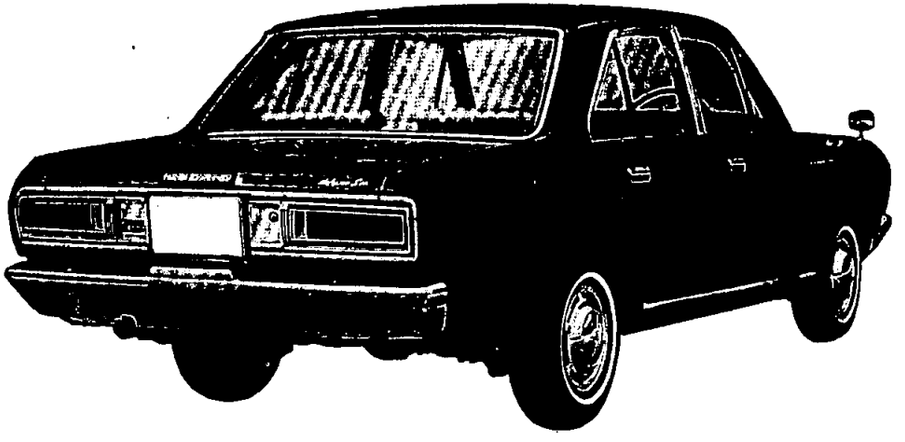

© 1972 NISSAN MOTOR CO., LTD.

Printed in Japan

DATSUN 2400 Personal Deluxe Six

MODEL G130-QU, GL130-Q

(from OCT-'69)

(from C/# G130-005001
from C/# GL130-000601)

B-C

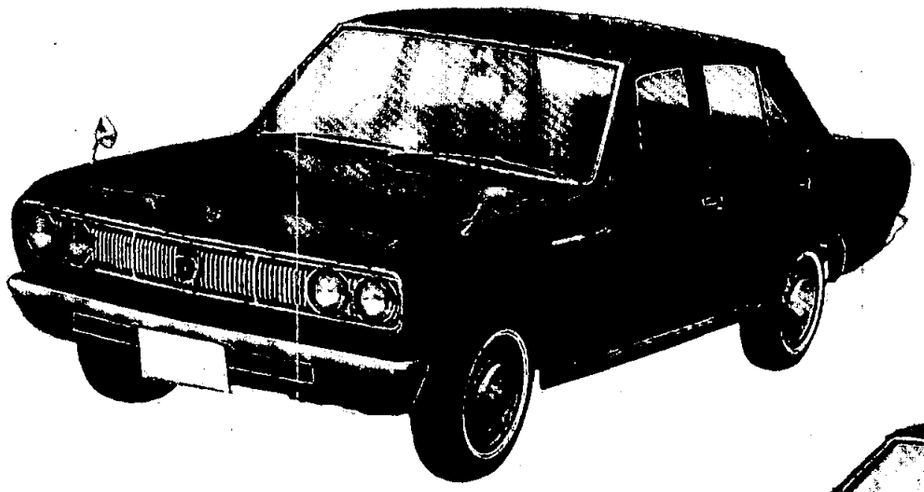

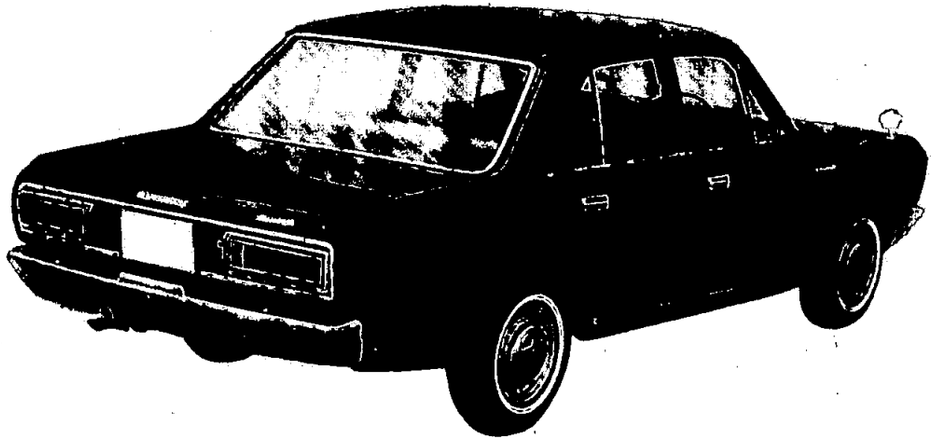

© 1972 NISSAN MOTOR CO., LTD.

REVISED: DECEMBER, 1972

DATSUN 2000 Personal Deluxe Six

MODEL H130-QU, HL130-Q

(from OCT-'69)

(from C/# H130-068001
from C/# HL130-001001)

B–C

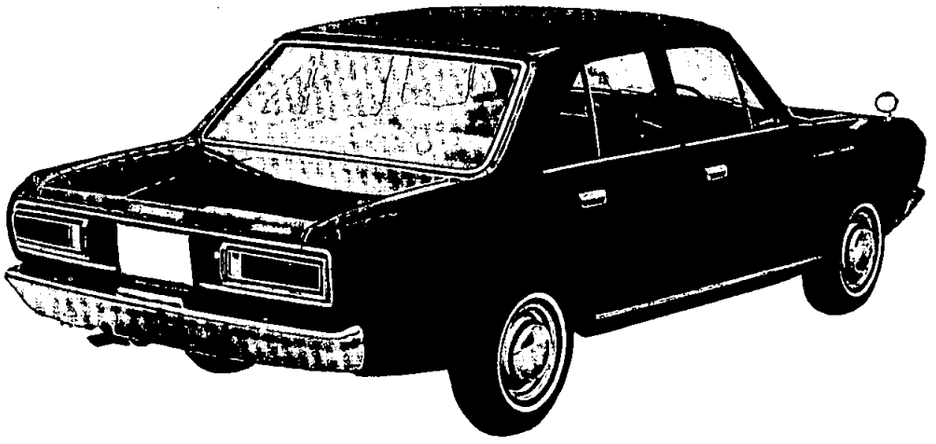

© 1972 NISSAN MOTOR CO., LTD.

Printed in Japan

DATSUN 2000

MODEL 130-SU, L130-S

(from OCT-'69)

(from C/# 130-070001
from C/# L130-003501)

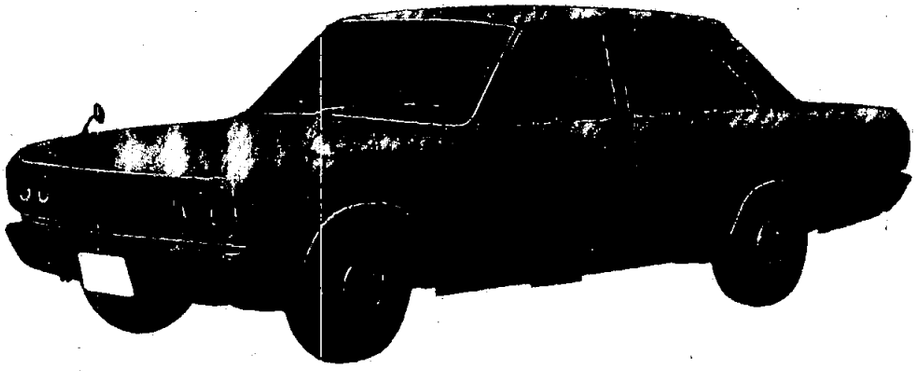

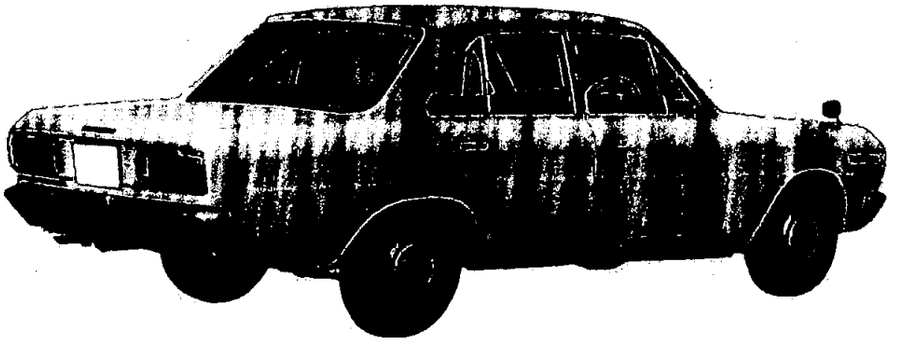

© 1972 NISSAN MOTOR CO., LTD.

REVISED: DECEMBER, 1972

DATSUN Diesel

MODEL Q130-U, QL130

(from OCT-'69)

(from C/# Q130-006001
from C/# QL130-002101)

B–C

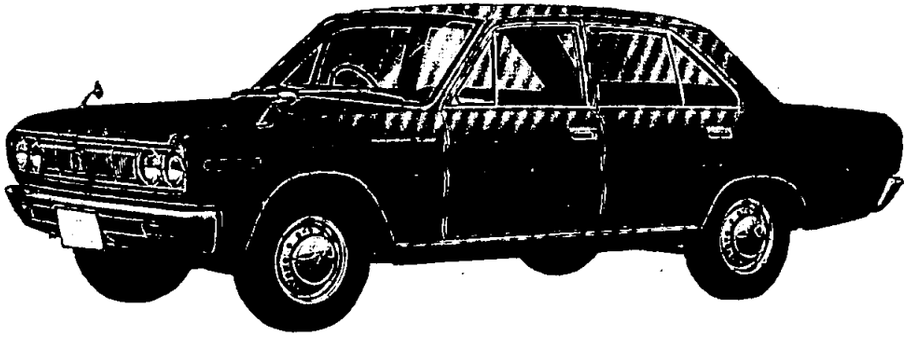

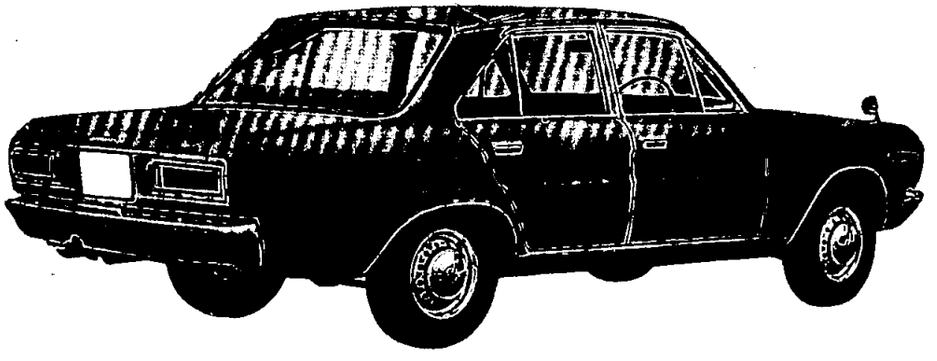

©1972 NISSAN MOTOR CO., LTD.

Printed in Japan

DATSUN 2000 Wagon Six

MODEL WH130-U, WHL130

(from OCT-'69)

(from C/# H130-068001)
(from C/# HL130-001001)

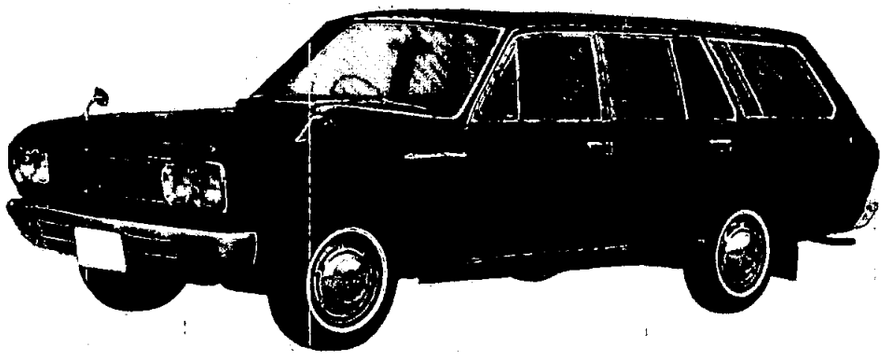

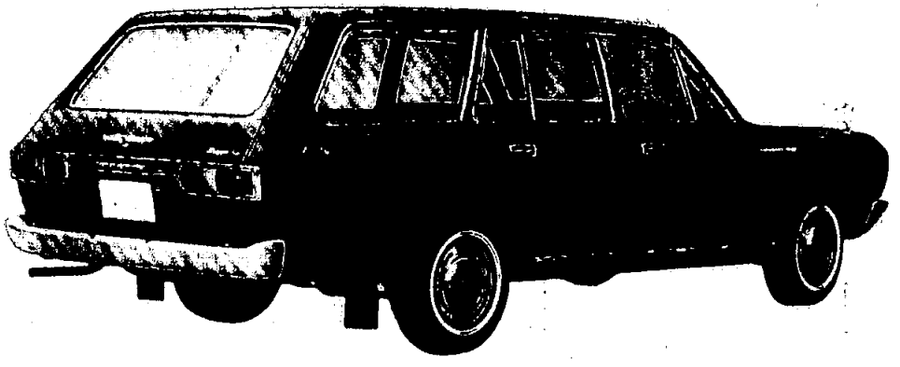

© 1972 NISSAN MOTOR CO., LTD.

REVISED: DECEMBER, 1972

DATSUN 2000 Deluxe Six

MODEL VH130-U, VHL130

(from OCT-'69)

(from C/# VH130-700001
from C/# VHL130-700001)

B–C

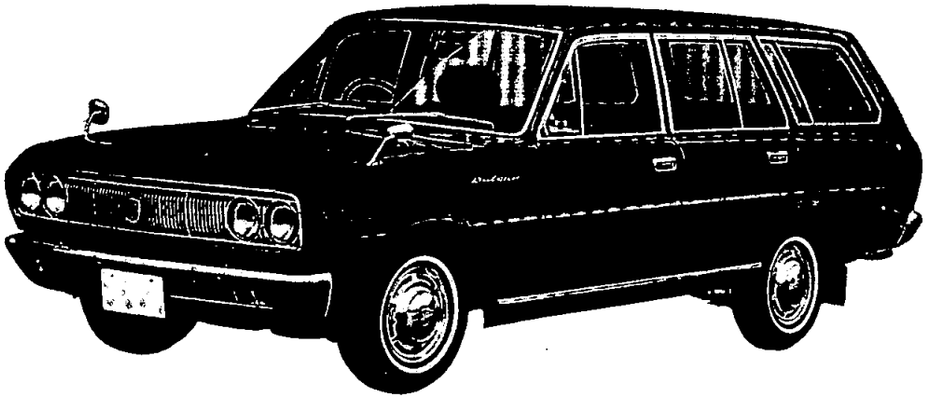

REVISED: DECEMBER, 1972

©1972 NISSAN MOTOR CO., LTD.

Printed in Japan

EXPLANATION OF NISSAN PARTS NUMBER SYSTEM

Our part number as a rule consists of ten digits which are made up of four factors as follows. However, in order to standardize small parts such as screws, washers, bolts, nuts and so on, which are often used on our models, we specify them as NES part according to the Nissan Engineering standard (N.E.S.). These NES parts in principle consist of six digits or eight digits.

Section No.	Character No.	Part Type No.	Distinction No.
O O	O O O	O O O	O O

1. Section No. (2 dighits)

   The Section No. consists of 2 digits which indicate the major function of parts.

2. Character No. (3 digits)

   The Character No. consists of 3 digits which indicate minor classification in each Section as shown by the Table of Section and Character No. on Page 8. The charactor No. of 000 or X00 singifies the assembly parts.

3. Part Type No. (3 digits)

   The Part Type consists of 3 digits which in principle Indicate the applied model as shown by the Table of Part Type on page 13. This means that the part is originally designed for the model. However, it may be used widely over our models. Therefore, it does not always signify the applied model.

4. Distinction No. (2 digits)

   The Distinction No. consists of 2 digits which indicate the difference between similar parts as shown below.

Kinds of Distinction	Distinction No.
a. Similarity	00 - 19, 60 - 69
b. Exclusive Service Use	25 - 29, 75 - 79
c. Material	40 - 45, 80 - 85
d. Processing	30 - 39, 90 - 94 50 - 59,

Note; The other Distinction Nos. are unset.

a. Similarity

When parts are only silghtly change, the distinction is shown by this No.. Similar or colored parts are distinguished by this No..

For example;

74902-11400	Carpet (red)
74902-11401	Carpet (blue)
74902-11402	Carpet (brown)

b. Exclusive Service Use

Repair kits or sets which are used exclusively for service, are set by this No..

For example;

46010-10800	Brake Master Cylinder assembly
46010-10825	Repair Kit

c. Material

The difference of materials is distinguished by this No..

B–C

© 1972 NISSAN MOTOR CO., LTD.

d. Processing

For the convenience of our production line process, in the case we can not supply by the original part No., the sub-assembly is supplied by this No..

For example;	20132–08750	Clamp sub-assembly
		Components
	20132–08700	┌ Clamp-lower
	20133–08700	├ Clamp-upper
	1–14520–1	├ Bolt
	9–15115–1	└ Washer

5. Except those numberical part numbers, there are the part numbers begining with letters. They are the part numbers exclusively reserved for service use.

© 1972 NISSAN MOTOR CO., LTD.

Printed in Japan

TABLE OF SECTION AND CHARACTER NO.

S-Section No.
C - Character No.

Classification S	Classification C	Section
10		Engine complete section
	000	Engine complete
	100	Engine ass'y
11		Engine section No. 1
	000	Cylinder parts
	100	Oil pan parts
	200	Engine support, front
	300	Engine support, rear
	400	Engine stabilizer
12		Engine section No. 2
	000	Piston, pin & ring
	100	Connecting rod
	200	Crank shaft
	300	Flywheel
13		Camshaft & valve sectior
	000	Camshaft & timing gear
	200	Valve parts
14		Manifold secton
	000	Manifold parts
	300	Ejector ass'y
15		Lubrication section
	000	Oil pump
	100	Oil tube
	200	Oil filter
16		Fuel section No. 1
	000	Carburetor
	400	Gasoline strainer
	500	Air cleaner
	600	Fuel supply system
	700	Injection pump
	800	
17		Fuel section No. 2
	000	Fuel pump
	200	Fuel tank
	400	Fuel tank mounting
	500	Fuel piping
18		Engine control section
	000	Accelerator pedal
	100	Accelerator link
	400	Engine control
19		Decomp & governor section
	000	Decomp parts
	100	Governor parts
	200	
	300	
20		Exhaust section
	000	Exhaust tube
	100	Muffler
	200	Tail tube
21		Cooling system
	000	Water pump
	200	Thermostat
	300	Oil cooler
	400	Radiator
	500	Hose & mounting parts
22		Electric section No. 1
	100	Distributor
	200	
	300	Vacuum control
	400	Plug-spark & cords
23		Electric section No. 2
	100	Generator
	200	
	300	Starter motor
	400	
	500	Regulator
24		Electric section No. 3
	000	Wiring
	100	Cable parts
	200	
	400	Battery
	500	
25		Electric section No. 4
	000	Meters
	100	Meter parts
	200	Switches
	300	Switch & parts
	400	Fuse & holder parts
26		Electric section No. 5
	000	Lamps No. 1 (Outside)
	100	
	200	Lamps No. 2 (Inside)
	300	Horn
27		Room heater & radio
	000	Room heater
	100	Control box
	300	Radio & clock
30		Clutch group
	000	Clutch with housing
	100	Clutch disc
	200	Clutch cover & pressure plate
	400	Bell housing
	500	Clutch with drawal
	600	Clutch control
32		Transmission group
	000	Transmission ass'y
	100	Case, extension covers
	200	3-shaft gear train
	600	Synchronizer parts
	700	Speed-drive parts
	800	Shift-control parts
	900	Fork & levers
33		Auxiliary gear box section
	100	Transfer parts
	200	
	300	Power take off gear
34		Transmission control
	100	Control device
	400	Linkage
	500	Linkage parts
36		Auxiliary brake section
	100	Drum & consernings
	300	Hand brake lever
	400	Hand brake cable
	500	Linkage on axle
	600	Linkage parts
37		Propeller shaft group
	000	Propeller shaft mounting
	100	Joint & yokes
	200	Propeller shaft primary
	300	Secondary propeller shaft
	500	Center bearing & hanger
38		Final drive unit
	100	Drive pinion & gear
	200	Companion flange
	300	Gear carrier
	400	Differential gear
	500	Front drive parts

© 1972 NISSAN MOTOR CO., LTD.

REVISED: DECEMBER, 1972

B–C

Classification S	Classification C	Section
40		Front axle section
	000	Front axle
	200	Hub & drum
	300	Road wheel
	500	Front axle parts
41		Front brake section
	000	Front brake
	100	Wheel cylinder
43		Rear axle section
	000	Rear axle
	100	Rear axle parts
	200	Hub & drum
	300	Road wheel
44		Rear brake section
	000	Rear brake
	100	Wheel cylinder
46		Master cylinder, pedal & piping
	000	Piping & cylinder ass'y
	100	Master cylinder parts
	200	Brake piping
	300	Brake tube parts
	400	Pedal parts
	500	Dust seal & mounting parts
47		Power brake section
	100	Vacuum tank
	200	Hydraulic power cylinder
	300	
	400	Vacuum tube
	500	Reservoirs mount parts
48		Steering section
	000	Steering ass'y
	100	Roller shaft
	200	Steering cover
	300	Steering mounting parts

Classification S	Classification C	Section
	400	Steering wheel
	500	Steering linkage
50		Frame section
	100	Frame parts
	200	
51		Cross member section
	000	Cross member parts
	100	Hook parts
54		Front suspension section
	000	Front spring
	200	Spring mounting parts
	300	Cross member-suspension
	400	Ass'y suspension
55		Rear suspension section
	000	Rear spring
	200	Spring mounting parts
56		Shock absorber section
	100	Front shock absorber
	200	Rear shock absorber & stabilizer
57		Spare tire section
	200	Spare tire carrier
60		Body complete white body
	000	Body front & body main
	100	Cab complete
61		Body front group
	000	Front body ass'y
62		Radiator shell & bumper section
	100	Radiator shell
	200	
	300	Radiator grille
	400	

Classification S	Classification C	Section
	500	Radiator core support
	600	Bumper apron
	650	Front bumper
	800	Radiator shell fitting
63		Fender section
	100	Front fender
	800	Fender fitting
64		Hood ledge section
	100	Hood ledge
	800	Hood ledge fitting
65		Hood section
	100	Hood
	200	
	300	
	400	Hood hinge
	500	
	600	Hood lock
	700	
	800	Hood fitting
66		Cowl section
	100	Front pillar
	300	Cowl top
	400	Cowl side
	500	Ventilator
	800	Cowl fitting
	900	Cowl trimming
67		Dash section
	100	Sash
	200	
	300	Dash lower
	800	Dash fitting
	900	Dash trimming
68		Instrument section
	100	Instrument
	200	
	300	

Classification S	Classification C	Section
	400	Cluster lid
	500	Cluster lid
	600	Glove pocket & lid
	800	Instrument fitting
	900	Instrument trimming
72		Windshield section
	100	W/S outer & inner
	600	Glass & weatherstrip
	800	W/S fitting
73		Roof section
	100	Roof panel
	200	Roof rail
	800	Roof fitting
	900	Roof trimming
74		Floor section No. 1
	100	Toe riser
	200	Toe board
	300	Front floor
	400	
	500	Rear floor
	600	Under sill
	700	Seal riser
	750	Tunnel
	800	Floor member
	900	Floor trimming
76		Body side section No. 1
	100	Body side frame
	200	
	300	Body side panel
	400	Body side sill
	500	Center pillar
	600	Rear pillar
	700	Rear wheel house
	800	Body side fitting
	900	Body side trimming
78		Rear fender section
	100	Rear fender

© 1972 NISSAN MOTOR CO., LTD.

Printed in Japan

Classification S	Classification C	Section
79		Back panel section
	100	Back panel
	200	
	300	Rear corner
	400	Rear seat back panel
	700	Rear window
	800	Back panel fitting
	900	Back panel trimming
80		Front door section No. 1
	100	Front door inner, outer
	200	Ventilator, sash
	300	Door window
	400	Hinge and check link
	500	Lock, remote control & handle
	600	
	700	Window regulator & handle
	800	Front door fitting
	900	Front door trimming
82		Rear door section No. 1
	100	Rear door inner, outer
	200	Ventilator, sash
	300	Door window
	400	Hinge & check link
	500	Lock, remote control & handle
	600	
	700	Window regulator & handle
	800	Rear door fitting
	900	Rear door trimming
84		Trunk section
	100	Trunk floor
	200	Trunk side
	300	Trunk lid
	400	Trunk lid lock, handle & support
	500	
	600	
	800	Trunk fitting
	900	Trunk trimming

Classification S	Classification C	Section
85		Rear bumper section
	100	Rear bumper apron
	200	Rear bumper bracket
	800	Rear bumper fitting
86		Front seat section No. 1
	100	Seat cushion frame
	200	Seat back frame
	300	Seat cushion & trim
	400	
	500	Seat adjusting
	600	Seat back & trim
	700	Center arm rest & trim
	800	Seat fitting
88		Rear seat section No. 1
	100	Seat cushion frame
	200	Seat back frame
	300	Seat cushion & trim
	500	Seat adjusting
	600	Seat back & trim
	700	Center arm rest & trim
	800	Seat fitting
93		Rear body section No. 1
	100	Guard frame
	200	Header board
	300	Side board & side gate
	400	Rear gate
	500	Rear body floor
	600	
	650	Wheel housing
	700	Rear body sill
	800	Rear body fitting
	900	Rear body trimming
95		Body mounting section
	100	Body mounting
96		E. T. C. section No. 1
	100	Step & consernings
	200	Licence plate bracket

Classification S	Classification C	Section
	300	Back mirror
	400	Sun visor
	500	Ash tray
	600	Fire extinguish
	700	Assist rail
	800	Package tray
	900	Body name & caution plate
97		E. T. C. section No. 2
	100	Reflector
	200	Plate meter
99		Car complete & tool section
	000	Car complete
	100	Chassis complete
	500	Tool & setting parts

Classification S	Classification C	Section

B–C

© 1972 NISSAN MOTOR CO., LTD.

TABLE OF PART TYPE

Small Type Part											
Vehicle Type	Part Type	Vehicle Type	Part Type	Vehicle Type	Part Type	Vehicle Type	Part Type	Vehicle Type	Part Type	Vehicle Type	Part Type
113	001	LG221	039	U223	077	DP410-L	115	VL520	153	DP411-MTK	194
L113	002	P211	040	UL223	078	P410-U	116	B20('68)	154	PL411-UTK	195
123	003	310	041	M223	079	P410-N	117	LB20ST('68)	155	WP411	196
AV123	004	L310	042	311	080	DP410-M	118	DP410-R	156	VP411	197
L123	005	U222	043	P311	081	DP410-N	119	R411	158	WPL411	198
U123	006	P310	044	WP311-U	082	DP410-LN	120	R411UTK('66.5)	159	A221	199
V123	007	WPL310	045	PL311-U	083	PL410-N	121	RL411UTK('66.5)	160	GA221	200
114	008	VG222	046	WPL311-U	084	SP310	122	RL411	161	DP411-A	202
124	009	SPL212	047	A120	085	SPL310-U	123	CSP311	163	B10-DA	203
U124	010	V222	048	SPL213	086	P410-UT	124	P411	165	G520-S	204
V124	011	VG221	049	320	087	PL410-UT	125	DP411	166	520S	205
AV124	012	222	050	L320	088	A220	126	DP411-MTK	167	520('67)	205
210	013	G222	051	VA120	089	VA220	127	P411-P	168	L520('67)	206
L210	014	LG222	052	U320	090	KA220	128	P411-UT	169	U520-S	207
220	015	L222	053	V320	091	SP310('65)	129	PL411-U	170	U520('67)	207
L220	016	126	054	UL320-U	092	SPL310('65)	130	PL411-UT	171	V520S	208
U220	017	W211	055	VL320-U	093	A220-H	131	P411-UTK	172	V520('67)	208
AV220	018	WP211	056	320	094	P410('65)	132	PL411-UTK	173	B10T	209
V220	019	WPL211	057	P312	095	PL410('65)	133	WP411	174	510-S	210
M113	020	VA20	058	PL312	096	WP410('65)	134	WPL411-U	175	510-UT	211
ML113	021	PG221	059	WP312	097	WPL410('65)	135	P411-N	176	510SA('68)	212
W113	022	PLG221	060	WPL312	098	DP410('65)	136	411	177	510-U	213
M114	023	VP221	061	A121	099	DP410-L('65)	137	DP411-L	178	L510	214
M210	024	VPL221	062	AL121	100	P410-U('65)	138	P411-R	179	L510-T	215
W210	025	UP221	063	N320	101	PL410-U('65)	139	B10	180	510	216
G220	026	UPL221	064	Y312	102	DP410-M('65)	140	VB10	181	510-T	217
211	027	PG222	065	NL320-U	103	DP410-N	141	B10-D	182	510-A	218
221	028	PLG222	066	SP310	104	DP410-LM	142	VB10-D	183	P510	219
G221	029	VP222	067	SPL310	105	P410-UT	143	P411	184	P510-TK	220
L211	030	VPL222	068	P410	106	PL410-UT	144	DP411	185	510-P	221
L221	031	UP222	069	410	107	P410-P	145	DP411-L	186	R510-S	222
A20	032	UPL222	070	PL410	108	SP311	146	PL411-U	187	R510	223
115	033	WP310	071	WP410	109	SPL311	147	DR411	188	R510STK('68)	224
125	034	223	072	WPL410	110	520	148	RL411-UTK	189	W510	225
LG220	035	G223	073	P410R	111	L520	149	P411-P	190	W510-A	226
U221	036	LG223	074	A122	112	U520	150	P411-U	191	WP510-UT	227
V221	037	VG223	075	VA122	113	UL520	151	P411-R	192	WL510	228
S221	038	VLG223	076	DP410	114	V520	152	DP411-R	193	V510	229

REVISED: DECEMBER, 1972
© 1972 NISSAN MOTOR CO., LTD.

Printed in Japan

Vehicle Type	Part Type	Vehicle Type	Part Type	Vehicle Type	Part Type	Vehicle Type	Part Type	Vehicle Type	Part Type	Vehicle Type	Part Type
PL510	230	KP510TK('69)	267	LGC10T	A04	WNL510TX('69)	A43	KGC10T('71)	A82	UA320('70)	B23
PL510UT	231	P510UTK('68)	268	PLGC10T	A05	510('69.5)	A44	KGC10AT('71)	A83	GKA320('70)	B24
PL510UA	232	PL510TK('68)	269	(P)510SU('69)	A06	SPL311('69.5)	A45	HGC10AT('71)	A84	VT641B('69)	B26
WPL510-U	233	L510UTK('68)	271	510P	A07	P510('70)	A46	PL510AU	A85	BT641('69)	B27
WPL510-UT	234	L510UX('68,'70)	272	510('69)	A08	R510('70)	A47	510S('71)	A86	T641M('69)	B28
WPL51-UA('68)	235	WPL510UTX('68,'70)	273	510(S)T('69)	A09	P510P('70)	A48	H510TK('71)	A87	NL521T('69)	B29
L510A('68)	236	(W)P411U(T)('67)	274	R510A('69)	A10	P510S('70)	A49	510P('71)	A88	N521('70.5)	B30
P510U('68)	237	(W)PL411U(T)('67)	275	P510UTK('69)	A11	P510A('70)	A50	510('71)	A89	NL521T('70.5)	B31
P510UA('68)	238	B10('68)	277	R510S('69)	A13	P510TK('70)	A51	510H('71)	A90	GN521('70.5)	B32
R510T('68)	239	VB10('68)	278	R510('69)	A14	KP510TK('70)	A52	510HT('71)	A91	UN521('70.5)	B33
P411('67)	240	55Z520	279	R510ST('69)	A15	WP510('70)	A53	510HA('71)	A92	521(J13)('70.5)	B34
DP411('67)	241	520U,520AU	280	WP510U('69)	A16	PL510('70)	A54	R150('71)	A93	JATOCO	B35
DP411L('67)	242	520EU('68)	280	WP510UA('69)	A17	PL510TU('70)	A55	KH510TK('71)	A94	NL521('70.5)	B36
D411R('67)	243	G520S('68)	281	V510S('69)	A18	PL510AU('70)	A56	V510('71)	A95	GNL521('70.5)	B37
DP411('67)	244	L520('68)	282	V(P)510('69)	A19	WP510A('70)	A57	L510('71)	A96	UNL521('70.5)	B38
RL411-UAK	245	U520('68)	283	(P)510U(A)('69)	A20	WPL510('70)	A58	L510SX('71)	A97	A321	B39
WRL411UTK('67)	246	V520('68)	284	P510(S)UT('69)	A21	WPL510TU('70)	A59	521X('69)	B01	PA321	B40
WRL411UAK('67)	247	C10M('68)	285	(P)L510S('69)	A22	PL510TK('70)	A60	G521SA('69)	B02	SA321S	B41
B10SF	248	C10U('68)	286	(P)L510('69)	A23	PC10M('70)	A61	L(G)521('69)	B03	VA321S	B42
LB10U('67)	249	C10MA('68)	287	(P)L510T(K)('69)	A24	PC10MA('70)	A62	L521TUH('69)	B04	VPA321S	B43
PL411UX	250	C10Y('68)	288	PL510A('69)	A25	PC10MT('70)	A63	UL521('69)	B05	N521T	B44
(L)B10-F(U)('68)	251	C10P('68)	289	PL510UT('69)	A26	WPC10M('70)	A64	V(L)521U('69)	B06	GN521T	B45
L520UX	252	LC10('68)	290	PL510UA('69)	A27	VPC10M('70)	A65	GA320	B07	PL521TU	B46
PL411UTK	253	VC10M('68)	291	WP510UT('69)	A28	PLC10M('70)	A66	A320	B08	PL521TU	B47
WPL411UTK	254	VC10S('68)	292	WPL510T('69)	A29	WPLC10('70)	A67	VA320	B09	620('72)	B50
SR333	255	WC10MU('68)	293	WPL510UT('69)	A30	C10S('70)	A68	RA320	B10	620U('72)	B51
SRL311('67.5)	256	WLC10M('68)	294	RPL510SUT('69)	A31	C10('70)	A69	T641('69)	B11	L620('72)	B52
KB10S('68)	257	QC10U('68)	295	SPL311('69)	A32	VC10S('70)	A70	LT641('69)	B12	G620('72)	B53
KB10	258	C10MUT('68)	296	SPL311('69)	A33	HGC10T('70)	A71	T641G('69)	B13	GNL620('72)	B54
SR311U('68)	259	LC10MT('68)	297	P510P('69)	A34	PGC10T('70)	A72	VT641U('69)	B14	PL620TU('72)	B55
SRL311('68)	260	W(L)C10MU(T)('68)	298	P510('69)	A35	C10SU('70)	A73	YT641('69)	B15	UN620('72)	B56
D510-T	261	S570T	299	P510A('69)	A36	SR311('70)	A74	DA320	B16	U620U('72)	B57
V510-S	262	LB10('67)	657	WP510	A37	SR311U('70)	A75	DVA320	B17	UL620('72)	B58
B10ST('67.5)	263	ALB10	658	NL510TX('69)	A38	SPL311U('70)	A77	UA320	B18	620(J13)('72)	B59
B10ST,B10SAF	264	QB10	659	C10A('69)	A39	SRL311U('70)	A78	VA320P	B19	TB20S('69)	G01
B10STF('67.5)	264	GC10T	A01	R510A('69)	A40	KP510AT('70)	A79	PL521TU	B20	(L)TB20STU('69)	G02
K510('68)	265	PGC10T	A02	P510A('69)	A41	KPC10T('70)	A80	A320('70)	B21	C20('70)	G03
KP510T('69)	266	GC10A	A03	WP510A('69)	A42	KPC10AT('71)	A81	KA320('70)	B22	C20H('70)	G04

B–C

© 1972 NISSAN MOTOR CO., LTD.

B–C

Vehicle Type	Part Type	Vehicle Type	Part Type	Vehicle Type	Part Type	Vehicle Type	Part Type	Medium Type Part Vehicle Type	Part Type	Vehicle Type	Part Type
VC20('70)	G05	B110GTR	H34	WPL510TU('71)	N11	610T('72)	U02	B130	300	FRB140	338
KC20('70)	G06	LB110	H35	JN510SU('71.5)	N12	610A('72)	U03	B40	301	FB140	339
C20('72)	G07	B110SR	H36	JN510P('71.5)	N13	610ATU('72)	U04	LB40	302	VB133	340
B120S('71)	G10	B110R	H37	H510TB('71)	N14	610H('72)	U05	UB40	303	GB140	341
B120ST('71)	G11	B110GTR	H38	KH510TB('71)	N15	P610('72)	U06	VB40	304	G30	342
B120STU('71)	G12	LB110TRU	H39	P510('71.5)	N16	P610H('72)	U07	C40	305	LB140	343
LB120ST('71)	G13	KB110	H40	P510T('71.5)	N17	P610TK('72)	U08	L520	306	KC140	344
B10('69)	H01	KB110G	H41	P510T('71.5)	N18	K610('72)	U10	VC40	307	TG30	345
B10F('69)	H02	KB110GR	H42	JAL510('71.5)	N19	KP610HT('72)	U11	B131	308	LC140	346
KB10('69)	H03	VB110S	H43	P510TK('71.5)	N20	KP610(A)TKU('72)	U12	B41	309	L30	347
VB10('69)	H04	VB110	H44	N510S('71.5)	N21	WP610H(A)T('72)	U13	VB41	310	KLG140	348
(L)B10-(U)('69)	H05	VB110SR	H45	PL510TU('71.5)	N22	V610('72)	U14	NB131	311	WP30	349
(L)B10-F(U)('69)	H06	LB110TRU	H46	RPL510STU('71.5)	N23	J610U('72)	U15	DB131	312	40	350
V(L)B10-(U)('69)	H07	KLB110U	H47	VN510('71.5)	N24	W610(A)TU('72)	U16	B42	313	L40	351
B110S('70.5)	H10	E10('71)	M01	PL510P('71.5)	N25	JL610('72)	U17	C42	314	C141	352
B110('70.5)	H11	E10RT('71)	M02	PL510P('72)	N26	JL610(S)T('72)	U18	NB42	315	GC140	355
B110SR('70.5)	H12	E10T('71)	M03	PL510ATU('72)	N27	KPL610(A)T('72)	U19	VC42	316	30U	356
B110R('70.5)	H13	E10SR('71)	M04	C10('71)	R01	L610TU('72)	U20	B132	317	P30-U	357
VB110S('70.5)	H14	VE10SR('71)	M05	C10S('71)	R03	L610AU('72)	U21	510A	318	LC141	358
VB110('70.5)	H15	VE10R('71)	M06	PLC10M('71)	R04	(P)L610ATU('72)	U22	WL510UTX	319	GLC140	359
LB110ST('70.5)	H16	VE10RT('71)	M07	C10SU('71)	R05	KL610(A)TU('72)	U23	VB132	320	F40	360
LB110T('70.5)	H17	PE10T('71)	M08	LC10S('71)	R06	VL610ST('72)	U24	FPB42	321	FR40	361
KB110('70.5)	H18	E10TU('71)	M09	VC10S('71)	R07	W(P)L610('72)	U25	30	322	VC141	362
KB110U('70.5)	H19	LE10T('71)	M10	WPC10MT('71)	R08	KL610STU('72)	U26	C43	323	VNC141	363
B110GT('70.5)	H20	KPE10TK('71)	M11	WP(L)C10U('71)	R09	KP610TE('72)	U27	VC43	324	KC141	364
B110GTR('70.5)	H21	E10H(R)T('71)	M12	GC10T('71)	R10	610(A)TK('72)	U28	FRB42	325	GC141	365
KB110G('70.5)	H22	KE10T('71)	M14	KPGC10('71)	R11	K610(A)TK('72)	U29	D30	326	VP30	366
B110GTK('70.5)	H23	KPE10HT('71)	M15	GLC10('71)	R12	P610STU('72)	U30	V30	327	H31	367
KB110GK('70.5)	H24	P510S('71)	N01	(P)C10HT('72)	R13	P610SATU('72)	U31	WL510	328	G31	368
KPB110('71)	H25	P510('71)	N02	KGC10TK('72)	R14	JNL610X('72)	U32	V510	329	P31	369
KPB110G('71)	H26	P510A('71)	N03	PC110SU(A)(T)	R40	WNL610TX('72)	U33	KC43	330	31	370
KPB110GR('71)	H27	P510TK('71)	N04	P(L)C110S(A)(T)	R41			B140	331	VP31	371
PB110T('71)	H28	KP510TK('71)	N05	VP(L)C110U	R43			NB140	332	WP31	372
PB110GT('71)	H29	WP510A('71)	N06	HGC110UT	R50			C140	333	GLC141	373
PB110GTK('71)	H30	PL510('71)	N07	KHGC110UT	R52			WPL510UT('71)	334	DP30	374
B110S('72)	H31	PL510TK('71)	N08	(K)HLGC110(A)T	R53			L30	335	LG141	375
B110	H32	PL510TU('71)	N09	KHGC110UAT	R54			VC140	336	GLC140	376
B110GT	H33	WPL510('71)	N10	610('72)	U01			VNC140	337	Q41	377

© 1972 NISSAN MOTOR CO., LTD.

Printed in Japan

Vehicle Type	Part Type	Vehicle Type	Part Type	Vehicle Type	Part Type	Vehicle Type	Part Type	Vehicle Type	Part Type	Vehicle Type	Part Type
LH31	378	"I"H20	677	WP31('65)	717	PL130S('66)	751	VP130-U('67)	780	WU657AE	854
H31-U	379	A30S	680	TH31	718	VPL130('66)	752	VPL130-U('67)	780	LT65('69)	855
G31-U	380	A30Y	681	TH31('65)	719	WPL130('66)	753	H130-U('67)	781	LG165A('69)	856
H31-J	381	PA30	682	LH31-U('65)	720	HL130('66)	754	130-SU('67)	782	LWU656AE	857
H31-M	382	PA30A	683	LG31-U('65)	721	H130	755	Q130-U('67)	782	KLT65UD('69)	858
G31S	383	VA30S	684	LG31S-U('65)	722	QL130('67.5)	755	W130-U('67)	782	LWU657AE	859
V40	384	VPA30	685	VP31-UK('65)	723	PL130SA('66)	756	WL130-U('67)	782	QT65	860
QLC141	385	PLA30U	686	WPL31-U('65)	724	FR41('67)	756	V130U('67)	782	QGT65A	861
QL40	386	WPLA30U	687	TLH31-U('65)	725	H130V	757	VL130-U('67)	782	WT653L	862
H31('64)	387	HA30W	688	H31T('65)	726	QL130-L('68)	759	PL130-U('67)	783	LWU653AE	863
G31('64)	388	WHA30UA	689	G31SY-P('65)	727	C240	760	L130-SU	784	T43,T44	864
G31S('64)	389	H130('68)	690	G31SY-P('64)	728	C240-H	760	C30-SU	785	LT53N,LT44NT	865
31('64)	390	P130-UK('68)	691	31Y-P('64)	729	LC240('67)	761	C30-SUT	786	QT43NU	866
VP31-K('64)	391	130-SU('68)	692	P130	730	QC240	762	C30-UT	786	NT43,NT44	867
WP31('64)	392	HL130-U('68)	693	P130S	731	QC240-H	762	C30-SUA	787	LNT43,LNT44	868
VC141	393	PL130-UK('68)	694	VP130	732	QLC240('67)	763	C30-UA	787	(L)T65HU	869
VC141N	394	L130-SU('68)	695	V130	732	HC240	764	C30-U	788	KQT65	870
KC141	395	VP130-U('68)	696	WP130	733	HQC240	764	LC30-S	789	DT65	871
GQC141	396	V130-U('68)	696	W130	733	PHC240('67)	765	LC30	789	ET65	872
KLC141	397	WP130-U('68)	697	H130	734	PHQC240('67)	766	LC30-ST	790	T44M	873
GLC141	398	W130-U('68)	697	Q130	735	VC240	767	LC30-T	790	T641('69)	B11
DC141	399	LH31('64)	700	130S	736	KC240	767	LC30-UT	790	LT641('69)	B12
GHC141	621	LG31('64)	701	130	736	DC240	768	LC30-SA	791	T641G('69)	B13
GQC141	629	LG31S('64)	702	130-A	737	DQC240	768	LC30-A	791	VT641U	B14
HC141	636	L31('64)	703	P130-A	737	KLC240('67)	769	LC30-UA	791	YT641('69)	B15
QHC141	637	VPL31('64)	704	130P('66)	738	GC240	770	DC30T('68)	792	VT641B('69)	B26
A30	661	WPL31('64)	705	130-P	739	GQC240	770	C240W	821	BT641('69)	B27
A30	662	H31-M('64)	706	41	740	GHQLC240('67)	771	HC240W	822	T641M('69)	B28
A30	663	H31-JD('64)	707	C142	741	GHC240	772	GLC240W	823	JATOCO	B35
A30	664	H31-U('64)	708	F41	742	GHQC240	772	GHLC240W	824	H130('69)	E01
Y130	667	LG31-UM('64)	709	L41	743	V130	774	LC240W	825	P130('69)	E02
PHC240	669	40T	710	LC142	744	H130A('67.5)	775	41	847	P130-S('69)	E03
"C"H20	671	Q40T	711	N41	745	HL130A('67.5)	776	L41	848	VP130('69)	E04
"D"H20	672	H31('65)	712	LN41('66)	746	Y130	777	Q41	849	WP130('69)	E05
"E"H20	673	G31('65)	713	41('67)	747	Y130('67.5)	778	T65U('67)	850	H130V('69)	E06
"F"H20	674	G31S('65)	714	L41('67)	748	HU30('67)	779	GT65UA('67)	851	130-S('69)	E07
"G"H20	675	31('65)	715	Q41('67)	749	P130-U('67)	780	WT656N	852	130P('69)	E08
"H"H20	676	VP31K('65)	716	PL130('66)	750	WPL130-U('67)	780	KT65UD('67)	853	Q130('69)	E09

© 1972 NISSAN MOTOR CO., LTD.

REVISED: DECEMBER, 1972

Vehicle Type	Part Type	Vehicle Type	Part Type	Vehicle Type	Part Type	Vehicle Type	Part Type	Large Type Part: Vehicle Type	Large Type Part: Part Type	Vehicle Type	Part Type
Y130('69)	E10	130('69.5)	E49	HLS30U	E88	P(L)230VTU('71)	P28	580	500	LG591	538
HL130('69)	E11	A30S('70)	E50	C30('72)	E89	PL230V-A('71)	P29	N580	501	U591	539
PL130('69)	E12	VA30('70)	E51	140('71)	J01	H230H('71)	P30	S580	502	UG591	540
PL130-S('69)	E13	HA30('70)	E52	Q140	J02	230VP('71)	P31	L580	503	UL591	541
VPL130('69)	E14	HA30A('70)	E53	N140('71)	J03	KHF230H('72)	P32	F580	504	UGL591	542
WPL130('69)	E15	HA30Q('70)	E54	140G('71)	J04	KHF230HT-A('72)	P33	U580	505	M591	543
HL130V	E16	HA30QA('70)	E55	140U('71)	J05	KHF230HT-G('72)	P34	UL580	506	ML591	544
G130('69)	E17	VHA30('70)	E56	L140('71)	J06	KF230VT-G('72)	P35	M580	507	MG591	545
GL130('69)	E18	HA30U('70)	E57	QL140('71)	J07	KF230HK('72)	P36	ML580	508	MGL591	546
QL130('69)	E19	WHLA30('70)	E58	GHC240	J10	KF230V('72)	P37	590	509	701	547
C30SU('69)	E20	C30S('70)	E60	GC240	J11	230HK-G('71)	P40	G590	510	E591	548
C30SUT('69)	E21	C30('70)	E61	GHLC240	J12	V230-G('71)	P41	DG590	511	UR591	549
C30SUT('69)	E22	C30AT('70)	E62	GLC240	J13	K230HTK-G('71)	P42	L590	512	NUR591	550
C30U('69)	E23	LC30S('70)	E63	C240('72)	J14	P230VT('71)	P43	LG590	513	582	551
C30T('69)	E24	LC30('70)	E64	HC240('72)	J15	PC130T('72)	S01	U590	514	L582	552
LC30('69)	E25	LC30TU('70)	E65	230H('71)	P01	C130T('72)	S02	DUG590	515	U582	553
LC30T('69)	E26	KC30T('70.5)	E66	230V('71)	P02	PC130H('72)	S03	UG590	516	M582	554
LC30A('69)	E27	KC30ATU('70.5)	E67	230Q('71)	P03	HC130T('72)	S04	M590	517	592	555
LC30SUT('69)	E28	KPC30TK('70.5)	E68	N230S('71)	P05	C130Q('72)	S05	MG590	518	G592	556
H130V('70)	E30	KPLC30T('70.5)	E69	N230P('71)	P06	KPC130T('72)	S06	DMG590	519	U592	557
G130U('70)	E31	KPLC30TU('70.5)	E70	Q230U('71)	P07	KPC130HT('72)	S07	ML590	520	S592	558
H130('70)	E32	KPLC30ATU('70.5)	E71	V(P)(L)230U('71)	P08	KPC130TK('72)	S08	MLG590	521	M592	559
GL130('70)	E33	PS30S('70)	E72	VN230S('71)	P09	KHC130TK('72)	S09	UL590	522	UG592	560
130SU('70)	E34	C30S('71)	E73	W(P)(L)230U('71)	P10	PC130AT('72)	S10	LS580	523	MG592	561
WH130('70)	E35	C30('71)	E74	Y230T('71)	P11	KHC130T	S12	E590	524	702	566
HL130V('70)	E36	C30H('71)	E75	P230VU('71)	P14	C130HT	S14	UR590	525	ULG680	567
L130S('70)	E37	LC30S('71)	E76	P(L)230QU('71)	P15	C130AT	S15	581	526	ML582	568
WHL130('70)	E38	LC30('71)	E77	N230SU('71)	P16	KC130T	S16	L581	527	UL582	569
G130UX('70)	E39	LC30TU('71)	E78	PL230V('71)	P17	KC130HT	S17	S581	528	UL582	570
C30SA('69.5)	E40	S30A('71)	E79	NL230S('71)	P18	HC130AT	S18	N581	529	F582	571
S30('70)	E41	HLS30ATU('71)	E80	K230HTK('71)	P20	KC130QT	S19	U581	530	LF582	572
PS30('70)	E42	HLS30E('71)	E81	K(P)230QTU('71)	P21	PC130UT	S20	UL581	531	F581	573
HS30U('70)	E43	S30('71)	E82	KH230HT('71)	P22	PLC130T	S21	M581	532	E592	574
HLS30('70)	E44	HLS30U('71)	E83	KPL230QT('71)	P23			ML581	533	ME592	575
HS30US('70)	E45	HLS30('71)	E84	P230VU-A('71)	P24			LS581	534	L592	576
HLS30U('70)	E46	C30A	E85	NL230VX('71)	P25			591	535	LG592	577
HLS30UA('70)	E47	S30A	E86	WPL230T('71)	P26			L591	536	LS582	578
C30('69.5)	E48	S30('72)	E87	PL230VT-A('71)	P27			G591	537	GU582	579

© 1972 NISSAN MOTOR CO., LTD.

Printed in Japan

Vehicle Type	Part Type	Vehicle Type	Part Type	Vehicle Type	Part Type	Vehicle Type	Part Type	Vehicle Type	Part Type	Special Type Part	
										Vehicle Type	Part Type
680	580	SC80-N	618	60	670	UD780	C15	HL150('71)	F12	4W61	400
S680	581	QLC80('66)	619	681	800	LG780	C16	150('72)	F13	B4W61	401
M680	582	LC80	620	U681	801	ULG780	C17	150('72)	F14	F4W61	402
U680	583	GC141	621	681-N	802	L780N	C18	H150U('72)	F15	L4W61	403
F680	584	50('65)	622	U681-N	803	UL780N	C19	HL150('72)	F16	R4W61	404
L680	585	T50JD('65)	624	G681	804	LS780	C20			2W71	405
ML680	586	C80	625	UG681	805	FL780	C21			4W71	406
UL680	587	LHC80	626	S681	806	FLS780	C22			C4W71	407
U690	588	L50	627	D681	807	DLR780	C23			F4W71	408
UG690	589	T50	628	DU681	808	DUL780	C24			R4W71	409
W582	590	GQC141	629	F681	809	DU780	C25			4W62	410
G680	591	T50('65)	630	FS681	810	UL780	C26			B4W62	411
MLE592	592	TL50	631	UG681TF('66.5)	811	ULG780	C27			F4W62	412
801	593	L50	632	LN681A('66.5)	812	UEG780	C28			4W62	413
ULG582	594	ULE690	635	ULN681('66.5)	813	E790	C29			4W72	414
UR690	595	HC141	636	LG681('66.5)	814	LE790	C30			C4W72	415
E690	596	HQC141	637	ULG681('66.5)	815	ULE790	C31			R4W72	416
ME690	597	ULEG690	638	LS681('66.5)	816	UR790	C32			4W63	417
MG690	598	UEG681	640	DL681('66.5)	817	ULR790	C33			4W73	418
LG680	599	D60W	641	DUL681('66.5)	818	ULEG790	C35			2W65	419
FL680	600	K60	642	FL681 ('66.5)	819	UG780TE	C36			R2W65	420
YLG680	601	60W	643	FLS681('66.5)	820	U780H	C37			4W65	421
LE690	602	G60HW	644	JUR690	826	DU780H	C38			F4W65	422
MLG690	603	QSC80('66)	645	E690	829	UE780	C39			G4W65	423
ULR680	604	SC80	646	H150('68)	840	TU780U	C40			L4W65	424
MLEG690	605	DQSC80-A	647	L150('68)	841	ULEG780	C41			R4W65	425
UL690	606	DSC80-A	648	JATOCO	B35	A80	C53			D4W61	426
ULG690	607	H150U('66)	650	780	C04	150('69)	F01			2W61	427
UE680	608	LH150('66)	651	U780	C05	H150U('69)	F02			R2W61	428
UG680	609	L60	652	G780	C06	HL150('69)	F03			R2W71	429
50	610	LG60	653	UG780	C07	L150A('69)	F04			4W74	430
50M	611	LG60H	654	N780	C08	150('69.5)	F05			4W75	431
50	612	YLG60	655	UN780	C09	150('70)	F06			K4W72	432
50M	613	KL60	656	S780	C10	L150('70)	F07			4W66	433
50J('64)	614	150-A	660	F780	C11	H150U('70)	F08			F4W72	434
QC80	615	150	660	FS780	C12	HL150('70)	F09			MR4W72	435
QSC80-N	616	150	666	D780	C13	150U('71)	F10			L4W72	436
C80	617	C80	668	L780	C14	H150U('71)	F11			L4W73	437

B–C

© 1972 NISSAN MOTOR CO., LTD.

B–C

Vehicle Type	Part Type	Vehicle Type	Part Type	Vehicle Type	Part Type	Vehicle Type	Part Type	Vehicle Type	Part Type	Vehicle Type	Part Type
L4W66	438	CFG005U('68)	477	60U('69)	C42						
4W73	439	BPU	478	G60U	C43						
60	440	PU860	479	G60HU	C44						
FLG4W66	441	FG2	480	VG60U	C45						
L60	442	FG2A	481	FG60HU	C46						
H60	443	FG005	482	4W73U	C47						
LH60	444	FG005U('67)	4827	F4W73U	C48						
G60	445	D11PU	483	FH60	C49						
LG60	446	D11PU	484	FH60U	C50						
D4W73	447	DPU	485	VH60	C51						
FH60	448	DPUM	486	VH60U	C52						
F4W73	449	EPU	487	R4W71B	E90						
FL4W73	450	CPU	488	RS4W71B	E91						
K60	451	CPU	489	R4W71B	E92						
KL60	452	FG007	490	F4W71B	E93						
WG60	453	FG007U('67)	4907	F4C71B	E94						
WLG60	454	H30PU	491	FS5C71B	E95						
VG60	455	H20PU	492	F5C71B	E96						
VLG60	456	BPU	493								
D60	457	PPU	494								
N60	458	HPU	495								
DN60	459	GPU	496								
FLG60H	460	GPU	497								
DL60	461	PPU	498								
N60('68)	462	PPU	499								
WG60('68)	463	60N('67)	641								
WLG60('68)	464	K60('67)	642								
60('68)	465	60W('67)	643								
G60('68)	466	G60HW('67)	644								
G60H('68)	467	L60('67)	652								
FG60H('68)	468	LG60('67)	653								
VG60('68)	469	LG60H('67)	654								
FG1	470	VLG60('67)	655								
FG1B	472	KL60('67)	656								
FG1C	474	JATOCO	B35								
FG003	475	L60U('67.5)	C01								
FG003U('67)	4757	KL60U('67.5)	C02								
CFG003U('68)	476	4W73	C03								

© 1972 NISSAN MOTOR CO., LTD.

Printed in Japan

CONVERSION LIST

Length

	m. metre	c. metre	metre	k. metre	inch	foot	yard	mile	s. mile
m. metre	1	0.10000	0.00100		0.03937	0.00328	0.00109		
c. metre	10.0000	1	0.01000	0.00001	0.39371	0.03281	0.01094		
metre	1000.00	100.000	1	0.00100	39.3707	3.28089	1.09363	0.00062	0.00054
k. metre		100000	1000.00	1	39370.7	3280.89	1093.63	0.62138	0.53962
inch	25.3995	2.53995	0.02540	0.00003	1	0.08333	0.02778	0.00002	0.00001
foot	304.794	30.4794	0.30479	0.00030	12.0000	1	0.33333	0.00019	0.00016
yard	914.383	91.4383	0.91438	0.00091	36.0000	3.00000	1	0.00057	0.00049
mile		160931	1609.31	1.60931	63360.0	5280.00	1760.00	1	0.86842
s. mile		185315	1853.15	1.85315	72960.0	6080.00	2026.66	1.15151	1

Weight

	gram	k. gram	ton	s. ton	l. ton	ounce	pound
gram	1	0.00100				0.03527	0.00220
k. gram	1000.00	1	0.00100	0.00110	0.00098	35.2739	2.20462
ton		1000.00	1	1.10230	0.98421	35273.9	2204.62
s. ton	907185	907.185	0.90719	1	0.89286	32000.0	2000.00
l. ton		1016.04	1.01604	1.12000	1	35840.0	2240.00
ounce	28.3495	0.02835	0.00003	0.00003	0.00003	1	0.06250
pound	453.592	0.45359	0.00045	0.00050	0.00045	16.0000	1

Capacity

	cub. metre	litre	cub. inch	cub. foot	cub. yard	U.S.gallon	U.K.gallon
Cub. metre	1	1000.00	61027.1	35.3165	1.30802	264.186	220.216
litre	0.00100	1	61.0271	0.03532	0.00131	0.26419	0.22022
cub. inch	0.00002	0.01639	1	0.00058	0.00002	0.00433	0.00361
cub. foot	0.02832	28.3167	1728.00	1	0.03704	7.48051	6.23549
cub. yard	0.76455	764.554	46656.0	27.0000	1	201.974	168.358
U. S. gallon	0.00379	3.78543	231.000	0.13368	0.00495	1	0.83270
U. K. gallon	0.00455	4.54596	277.413	0.16037	0.00594	1.20091	1

© 1972 NISSAN MOTOR CO., LTD.

REVISED: DECEMBER, 1972

ALPHABETICAL SECTION INDEX

PART NAME	GROUP NO.
AXLE	
AXLE front–Disc brake type–	181
AXLE front–Drum brake type–	181A
AXLE rear	183
DRUM rear	183
HUB front wheel	181A
LINK front suspension	182
MEMBER front suspension	182
SPRING front	182
SUSPENSION front	182
SUSPENSION rear	184
WHEEL front road	181A
WHEEL rear road	183
BODY –SEDAN–	
ARMREST front door	230
ARMREST rear door	233
ASH TRAY instrument	216
ASH TRAY seat	235
BAR torsion trunk lid	234
BELT safty	239
BOX console	237
BUMPER front	212
BUMPER rear	234
CARPET	221
CLOTH head lining	219
CONTROL hood lock	214
COVER front seat trim	236,236A
COVER rear seat trim	238
DEVICE reclining	236,236A
FENDER front	213
FENDER rear	226
FITTING body side	225
FITTING cowl	215
FITTING floor	220
GARNISH rear corner	219
GLASS rear door	231
GLASS rear window	227
GLASS windshield	218
GRILLE radiator	212
GRILLE cowl top	215
HANDLE front door	229
HANDLE rear door	232
HEAD REST	239
HINGE front door	228
HINGE rear door	231
LEGULATOR front door	229
LEGULATOR rear door	232
LOCK front door	217
LOCK rear door	217
LOCK glove box lid	217
LID glove box	217
MAT	221
MEMBER side front & rear	220
MIRROR side & door	213
MOULDING rear window	227
MOULDING sill	225
MOULDING windshield	218
PAD instrument	217
PANEL body side	223
PANEL cowl top	215
PANEL dash & instrument	216
PANEL cowl	215
PANEL floor	220
PANEL front door	228
PANEL hood	213
PANEL rear	226
PANEL rear door	231
PANEL roof	219
PILLAR center	223
PILLAR front	223
PILLAR rear	223
PLATE kicking front & rear	224
SASH rear door	231
SEAT front	235
SEAT front–Separate type for DX–	236
SEAT front–Separate type for STD–	236A
SEAT rear	238
STRAP assist	219
SUNVISOR	219
TRAY package	216
TRIMMING body side	224
TRIMMING dash & instrument	217
TRIMMING floor	221
TRIMMING front door	230
TRIMMING rear door	233
TRIMMING roof	219
TRUNK	234
WEATHERSTRIP rear window	227
WEATHERSTRIP windshield	218
BODY –WAGON & VAN–	
ARMREST front door	258
ARMREST rear door	261
ASH TRAY instrument	246
ASH TRAY seat	265
BAR torsion tail gate hinge	263
BELT safty	268
BUMPER front	242
BUMPER rear	255
CARPET	251A
CLOTH head lining	249

© 1972 NISSAN MOTOR CO., LTD.

Printed in Japan

PART NAME	GROUP NO.
CONTROL hood lock	244
COVER front seat trim	265
COVER rear seat trim	266
FENDER front	243
FENDER rear	255
FITTING body side	254
FITTING cowl	245
FITTING floor	250
GLASS rear door	259
GLASS tail gate	263
GLASS windshield	248
GRILLE radiator	242
GRILLE cowl top	245
HANDLE front door	257
HANDLE rear door	260
HEAD REST	268
HINGE front door	256
HINGE rear door	259
LEGULATOR front door	257
LEGULATOR rear door	260
LOCK front door	260
LOCK rear door	247
LOCK glove box lid	247
LID glove box	251
MAT	251
MEMBER side front & rear	251
MIRROR side & door	243
MOULDING side window	262
MOULDING sill	254
MOULDING windshield	248
PAD instrument	247
PANEL body side	252
PANEL cowl top	245
PANEL dash & instrument	246
PANEL cowl	245
PANEL floor	250
PANEL front door	256

PART NAME	GROUP NO.
PANEL hood	243
PANEL rear door	259
PANEL tail gate	263
PANEL roof	249
PILLAR center	252
PILLAR front	252
PILLAR rear	252
PLATE kicking front & rear	253
SASH rear door	259
SEAT front–Bench type for VAN–	265
SEAT front–Bench type for WAGON–	265
SEAT rear	266
SEAT third	267
STRAP assist	249
SUNVISOR	249
TRAY package	246
TRIMMING body side	253
TRIMMING dash & instrument	247
TRIMMING floor	251A
TRIMMING front door	258
TRIMMING rear door	261
TRIMMING roof	249
TRIMMING tail gate	264
WEATHERSTRIP tail gate window	263
WEATHERSTRIP windshield	248
WINDOW side	262
WINDOW tail gate	263

BRAKE

PART NAME	GROUP NO.
BRAKE front–Disc type–	192
BRAKE front–Drum type–	192A,192B
BRAKE hand	191
BRAKE rear	193,193A,193B,193C,193D

PART NAME	GROUP NO.
CYLINDER brake master–Single–	196,196A
CYLINDER brake master–Tandem–	196B,196C
CYLINDER brake master–Tandem option–	196D,196E
HOSE master vac	198
PEDAL brake & clutch	195
PIPING brake	194
VAC master	197,197A

ELECTRICAL (VOL. 1)

PART NAME	GROUP NO.
ALTERNATOR–12V/40A–	123
ALTERNATOR–12V/300W–	123A
ALTERNATOR–12V/500WSD22–	123C
ALTERNATOR–12V/500W–	123B
CABLE high tension–H20–	122C
CABLE high tension–J20–	121B
CABLE high tension–L23–	121A
CABLE high tension–L24 & L20(A)–	121
COIL ignition–H20–	122C
COIL ignition–J20–	122B
COIL ignition–L23–	122A
COIL ignition–L24 & L20(A)–	122
DISTRIBUYOT–H20–	121C
DISTRIBUTOR–J20–	121B
DISTRIBUTOR–L23–	121A
DISTRIBUTOR–L24 & L20(A)–	121
MOTOR starter–H20–	124B
MOTOR starter–J20–	124C
MOTOR starter–L20(A)	124D
MOTOR starter–L23–	124A
MOTOR starter–L24–	124
MOTOR starter–SD22–	124E
PLUG spark–H20–	122C
PLUG spark–J20–	122B

© 1972 NISSAN MOTOR CO., LTD.

REVISED: DECEMBER, 1972

PART NAME	GROUP NO.
PLUG spark–L23–	122A
Plug spark–L24 & L20(A)–	122
REGULATOR voltage–H20–	122C
REGULATOR voltage–J20–	122B
REGULATOR voltage–L23–	122A
REGULATOR voltage–L24 & L20(A)–	122
SUPPORT distributor–H20–	121C
SUPPORT distributor–J20–	121B
SUPPORT distributor–L23–	121A
SUPPORT distributor–L24 & L20(A)–	121

ELECTRICAL (VOL. 2)

PART NAME	GROUP NO.
ANTENNA	147
BATTERY	148
CLOCK instrument	143A
COOLER car–DASH TYPE L24,L20A, DIESEL KIKI–	145C
COOLER car–H20–	145B
COOLER car–J20–	145A
COOLER car–L23–	145
ELECTRIC UNIT	142
HEATER room–H20–	144B
HEATER room–J20–	144A
HEATER room–L24,L23 & L20(A)–	144
HEATER room–SD22–	144C
LAMP head–ICHIKHO–	151
LAMP head–KOITO–	151A
LAMP licence–SEDAN–	154
LAMP licence–W & V–	154A
LAMP parking & turn signal	152
LAMP rear–SEDAN–	154
LAMP rear–W & V–	154A
LAMP room & inspection	156
LAMP side MARKER	153
METER instrument	143, 143A
RADIO	147
WASHER windshield	150
WIPER windshield	149
WIRING	141

ENGINE

PART NAME	GROUP NO.
BLOCK cylinder–H20–	83
BLOCK cylinder–J20–	64
BLOCK cylinder–L20(A)–	43
BLOCK cylinder–L23–	23
BLOCK cylinder–L24–	3
BLOCK cylinder–SD22–	103
CAMSHAFT–H20–	86
CAMSHAFT–J20–	67
CAMSHAFT–L20(A)–	46
CAMSHAFT–L23–	27
CAMSHAFT–L24–	6
CAMSHAFT–SD22–	107
CARBURETOR–H20–	89
CARBURETOR–J20–	70
CARBURETOR–L20(A)–	49
CARBURETOR–L23–	30
CARBURETOR–L24–	9
CLEANER air–H20–	90
CLEANER air–J20–	71
CLEANER air–L20(A)–	50
CLEANER air–L23–	31
CLEANER air–L24–	10
CLEANER air–SD22–	110
COVER rocker–H20–	84
COVER rocker–J20–	65
COVER rocker–L20(A)–	44
COVER rocker–L23–	25
COVER rocker–L24–	4
COVER rocker–SD22–	105
CRANKSHAFT–H20–	85
CRANKSHAFT–J20–	66
CRANKSHAFT–L20(A)–	45
CRANKSHAFT–L23–	26
CRANKSHAFT–L24–	5
CRANKSHAFT–SD22–	106
ENGINE assemblies–H20–	81
ENGINE assemblies–J20–	61
ENGINE assemblies–L20(A)–	41
ENGINE assemblies–L23–	21
ENGINE assemblies–L24–	1
ENGINE assemblies–SD22–	101
FILTER fuel–SD22–	113
FILTER oil–H20–	83
FILTER oil–J20–	64
FILTER oil–L20(A)–	43
FILTER oil–L23–	23
FILTER oil–L24–	3
FILTER oil–SD22–	111
FLYWHEEL–H20–	85
FLYWHEEL–J20–	66
FLYWHEEL–L20(A)–	45
FLYWHEEL–L23–	26
FLYWHEEL–L24–	5
FLYWHEEL–SD22–	106
FUEL SUPPLY SYSTEM–SD22–	114
GASKET KIT regrined–H20–	82
GASKET KIT regrined–J20–	62
GASKET KIT regrined–L20(A)–	42
GASKET KIT regrined–L23–	22
GASKET KIT regrined–L24–	2
GASKET KIT regrined–SD22–	102
GASKET KIT repair–H20–	82
GASLET KIT repair–J20–	62
GASKET KIT repair–L20(A)–	42

© 1972 NISSAN MOTOR CO., LTD.

Printed in Japan

PART NAME	GROUP NO.
GASKET KIT repair–L23–	22
GASKET KIT repair–L24–	2
GASKET KIT repair–SD22–	102
HEAD cylinder–H20–	84
HEAD cylinder–J20–	65
HEAD cylinder–L20(A)–	44
HEAD cylinder–L23–	25
HEAD cylinder–L24–	4
HEAD cylinder–SD22–	105
MANIFOLD–H20–	87
MANIFOLD–J20–	68
MANIFOLD–L20(A)–	47
MANIFOLD–L23–	28
MANIFOLD–L24–	7
MANIFOLD–SD22–	108
PAN oil–H20–	83
PAN oil–J20–	64
PAN–L20(A)–	43
PAN oil–L23–	23
PAN oil–L24–	3
PAN oil–SD22–	103
P.C.VENTILATOR SYSTEM–J20–	63
PISTON–H20–	85
PISTON–J20–	66
PISTON–L20(A)–	45
PISTON–L23–	26
PISTON–L24–	5
PISTON–SD22–	106
PUMP fuel–H20 electric–	92A
PUMP fuel–J20 electric–	73A
PUMP fuel–L23 electric–	33A
PUMP fuel–H20–	92
PUMP fuel–J20–	73
PUMP fuel–L20(A)–	52
PUMP fuel–L23–	33
PUMP fuel–L24–	12
PUMP (1) injection	115
PUMP (2) injection–Feed pump–	116
PUMP (3) injection–Pneumatic governor–	117
PUMP (4) injection–Automatic timer–	118
PUMP oil–H20–	88
PUMP oil–J20–	69
PUMP oil–L20(A)–	48
PUMP oil–L23–	29
PUMP oil–L24–	8
PUMP oil–SD22–	109
PUMP water–H20–	93
PUMP water–J20–	74
pump water–L20(A)–	53
PUMP water–L23–	34
PUMP water–L24–	13
PUMP water–SD22–	119
ROD connecting–H20–	85
ROD connecting–J20–	66
ROD connecting–L20(A)–	45
ROD connecting–L23–	26
ROD connecting–L24–	5
ROD connecting–SD22–	106
STRAINER fuel–H20–	91
STRAINER fuel–J20–	72
STRAINER fuel–L20(A)–	51
STRAINER fuel–L23–	32
STRAINER fuel–L24–	11
VALVE MECHANISM–H20–	86
VALVE MECHANISM–J20–	67
VALVE MECHANISM–L20(A)–	46
VALVE MECHANISM–L23–	27
VALVE MECHANISM–L24–	6
VALVE MECHANISM–SD22–	107
VENTURI–SD22–	108

ENGINE FITTING

PART NAME	GROUP NO.
ACCELERATOR	134
MOUNTING engine	136
MUFFLER	131, 131A
PIPE exhaust–SEDAN–	131
PIPE exhaust–W & V–	131A
PIPING fuel–DIESEL–	133A
PIPING fuel–GASOLINE–	133
RADIATOR	135
TANK fuel–SEDAN–	132
TANK fuel–W & V–	132A

MISCELLANEOUS

PART NAME	GROUP NO.
COOLANT long life–NISSAN–	275
CYLINDER lock	272
EMBLEM	271
KEY	272
KEY blank	273
PAINT touch-up	276
PLATE model number	277
SEALER–N.C.S.–	275
TOOL KIT	274

POWER TRAIN

PART NAME	GROUP NO.
CARRIER gear	180
CASE transmission–AUTOMATIC–	172
CASE transmission–R3W71A–	165
CASE transmission–R4W71A–	168

© 1972 NISSAN MOTOR CO., LTD.

PART NAME	GROUP NO.
CLUTCH	161
CONTROL transmission–AUTOMATIC LD–	178A
CONTROL transmission–AUTOMATIC RD–	178
CONTROL transmission–R3W71A LD–	176A
CONTROL transmission–R3W71A RD–	176
CONTROL transmission–R4W71A LD–	177A
CONTROL transmission–R4W71A RD–	177
CYLINDER clutch operating	162
CYLINDER clutch master–NABCO–	163
CYLINDER clutch master–NABCO–	163B
CYLINDER clutch master–NABCO–	163D
CYLINDER clutch master–TOKICO–	163C
CYLINDER clutch master–TOKICO–	163E
GEAR transmission–R3W71A–	166
GEAR transmission–R4W71A–	169
SHAFT propeller	179
SHIFTING transmission–R3W71A–	167
SHIFTING transmission–R4W71A–	170
TRANSMISSION assemblies	164, 164A

STEERING

PART NAME	GROUP NO.
GEAR steering	201
GEAR steering–collapsible type–	202
LINKAGE steering	203
WHEEL steering	204

© 1972 NISSAN MOTOR CO., LTD.

Printed in Japan

ILLUSTRATION INDEX

DESCRIPTION	PAGE NO.
ENGINE L24 ('70 YEAR MODEL)	
ENGINE ASSEMBLY (L24)	1–1
ENGINE ASSEMBLY (L24 BARE)	1–2
ENGINE ASSEMBLY (L24 SHORT)	1–3
ENGINE GASKET KIT (L24 REPAIR)	2–1
ENGINE GASKET KIT (L24 REGRIND)	2–2
CYLINDER BLOCK, FRONT COVER, OIL PAN & OIL FILTER ELEMENT (L24)	3
CYLINDER HEAD, ROCKER COVER & THERMOSTAT (L24)	4
PISTON, CRANKSHAFT & CONNECTING ROD (L24)	5
CAMSHAFT, SPROCKET, CHAIN & VALVE (L24)	6
MANIFOLD (L24)	7
OIL PUMP (L24)	8
CARBURETOR (L24)	9
AIR CLEANER (L24)	10
FUEL STRAINER & FUEL TUBE (L24)	11
FUEL PUMP & FUEL TUBE (L24)	12
WATER PUMP & FAN BELT (L24)	13
ENGINE L23 ('69 YEAR MODEL)	
ENGINE ASSEMBLY (L23)	21
ENGINE GASKET KIT (L23)	22
CYLINDER BLOCK, FRONT COVER, OIL PAN & OIL FILTER ELEMENT (L23)	23
OIL COOLER (L23)	24
CYLINDER HEAD, ROCKER COVER & THERMOSTAT (L23)	25
PISTON CRANKSHAFT & CONNECTING ROD (L23)	26
CAMSHAFT, SPROCKET, CHAIN & VALVE	27
MANIFOLD (L23)	28
OIL PUMP (L23)	29
CARBURETOR, INSULATOR & THROTTLE SHAFT (L23)	30
AIR CLEANER (L23)	31
FUEL STRAINER & FUEL TUBE (L23)	32
FUEL PUMP & FUEL TUBE (L23)	33
FUEL PUMP & FUEL TUBE (L23 ELECTRIC)	33A
WATER PUMP & FAN BELT (L23)	34
ENGINE L20(A) ('70 YEAR MODEL)	
ENGINE ASSEMBLY [L20(A)]	41–1
ENGINE ASSEMBLY [L20(A) BARE]	41–2
ENGINE ASSEMBLY [L20(A) SHORT]	41–3
ENGINE GASKET KIT [L20(A) REPAIR]	42–1
ENGINE GASKET KIT [L20(A) REGRIND]	42–2
CYLINDER BLOCK, FRONT COVER, OIL PAN & OIL FILTER ELEMENT [L20(A)]	43
CYLINDER HEAD, ROCKER COVER & THERMOSTAT [L20(A)]	44
PISTON, CRANKSHAFT & CONNECTING ROD [L20(A)]	45
CAMSHAFT, SPROCKET, CHAIN & VALVE [L20(A)]	46
MANIFOLD [L20(A)]	47
OIL PUMP [L20(A)]	48
CARBURETOR [L20(A)]	49
AIR CLEANER [L20(A)]	50
FUEL STRAINER & FUEL TUBE [L20(A)]	51
FUEL PUMP & FUEL TUBE [L20(A)]	52
WATER PUMP & FAN BELT [L20(A)]	53
ENGINE J20 ('69 YEAR MODEL)	
ENGINE ASSEMBLY (J20)	61
ENGINE GASKET KIT (J20 REPAIR)	62–1
ENGINE GASKET KIT (J20 REGRIND)	62–2
P.C. VENTILATION SYSTEM (J20)	63
CYLINDER BLOCK, FRONT COVER, OIL PAN & OIL FILTER ELEMENT (J20)	64
CYLINDER HEAD, ROCKER COVER & THERMOSTAT (J20)	65
PISTON, CRANKSHAFT & CONNECTING ROD (J20)	66
CAMSHAFT, SPROCKET, CHAIN & VALVE (J20)	67
MANIFOLD (J20)	68
OIL PUMP (J20)	69
CARBURETOR, INSULATOR & THROTTLE SHAFT (J20)	70–1
CARBURETOR REPAIR KIT (J20)	70–2
AIR CLEANER (J20)	71
FUEL STRAINER & FUEL TUBE (J20)	72
FUEL PUMP & FUEL TUBE (J20)	73
FUEL PUMP & FUEL TUBE (J20 ELECTRIC)	73A
WATER PUMP & FAN BELT (J20)	74
ENGINE H20	
ENGINE ASSEMBLY (H20)	81
ENGINE GASKET KIT (H20 REPAIR)	82–1
ENGINE GASKET KIT (H20 REGRIND)	82–2
CYLINDER BLOCK, FRONT COVER, OIL PAN & OIL FILTER ELEMENT (H20)	83
CYLINDER HEAD, ROCKER COVER, & THERMOSTAT (H20)	84

© 1972 NISSAN MOTOR CO., LTD.

REVISED: DECEMBER, 1972

DESCRIPTION	PAGE NO.
BRAKE	
HAND BRAKE & HAND BRAKE CABLE (R DRIVE '69 YEAR MODEL)	191–1
HAND BRAKE & HAND BEAKE CABLE (R DRIVE '70 YEAR MODEL)	191–2
HAND BRAKE & HAND BRAKE CABLE (L DRIVE)	191A
FRONT BRAKE & WHEEL CYLINDER (DISC TYPE)	192
FRONT BRAKE & WHEEL CYLINDER (1) (DRUM TYPE)	192A
FRONT BRAKE & WHEEL CYLINDER (2) (DRUM TYPE)	192B
REAR BRAKE & WHEEL CYLINDER (1) ('69 YEAR MODEL)	193
REAR BRAKE & WHEEL CYLINDER (2) ('70 YEAR MODEL)	193A
REAR BRAKE & WHEEL CYLINDER (3) ('69 YEAR MODEL)	193B
REAR BRAKE & WHEEL CYLINDER (4) ('70 YEAR MODEL)	193C
REAR BRAKE & WHEEL CYLINDER (5) (W & V)	193D
BRAKE PIPING & G VALVE (SEDAN)	194–1
BRAKE PIPING (W & V)	194–2
BRAKE & CLUTCH PEDAL (R DRIVE)	195–1
BRAKE & CLUTCH PEDAL (L DRIVE)	195–2
BRAKE MASTER CYLINDER (SINGLE)	196
BRAKE MASTER CYLINDER (SINGLE)	196A
BRAKE MASTER CYLINDER (TANDEM) ('69 YEAR MODEL)	196B
BRAKE MASTER CYLINDER (TANDEM) ('70 YEAR MODEL)	196C
BRAKE MASTER CYLINDER (TANDEM) ('69 YEAR MODEL)	196D
BRAKE MASTER CYLINDER (TANDEM) ('70 YEAR MODEL)	196E
MASTER VAC (6" SIZE)	197
MASTER VAC (9" SIZE)	197A
MASTER VAC HOSE (R DRIVE)	198–1
MASTER VAC HOSE (L DRIVE)	198–2
STEERING	
STEERING GEAR & COLUMN JACKET (R DRIVE)	201–1
STEERING GEAR & COLUMN JACKET (L DRIVE)	201–2
STEERING GEAR & COLUMN (COLLAPSIBLE TYPE R DRIVE)	202–1
STEERING GEAR & COLUMN (COLLAPSIBLE TYPE L DRIVE)	202–2
STEERING LINKAGE (R DRIVE)	203–1
STEERING LINKAGE (L DRIVE)	203–2
STEERING WHEEL & STEERING LOCK (R DRIVE)	204–1
STEERING WHEEL & STEERING LOCK (L DRIVE)	204–2
BODY (SEDAN)	
RADIATOR GRILLE, FRONT BUMPER & OVER RIDER (SEDAN)	212
FRONT FENDER, HEAD LAMP CASE, HOOD LEDGE & HOOD (SEDAN)	213
HOOD LOCK CONTROL (SEDAN)	214
COWL PANEL & FITTING (SEDAN)	215
DASH PANEL, DASH SIDE PANEL & INSTRUMENT PANEL (SEDAN R DRIVE)	216
DASH PANEL, DASH SIDE PANEL & INSTRUMENT PANEL (SEDAN L DRIVE)	216A
DASH & INSTRUMENT TRIMMING (SEDAN R DRIVE)	217
DASH & INSTRUMENT TRIMMING (SEDAN L DRIVE)	217A
WINDSHIELD GLASS, WEATHERSTRIP & MOUNTING (SEDAN)	218
ROOF PANEL & TRIMMING (SEDAN)	219
FLOOR PANEL & FITTING (SEDAN)	220
FLOOR CARPET (SEDAN R DRIVE)	221–1
FLOOR CARPET (SEDAN L DRIVE)	221–2
FLOOR TRIM, MAT, INSULATOR & REAR WHEEL HOUSE TRIM (SEDAN R DRIVE)	222–1
FLOOR TRIM, MAT, INSULATOR & REAR WHEEL HOUSE TRIM (SEDAN L DRIVE)	222–2
BODY SIDE PANEL & SILL BODY (SEDAN)	223
BODY SIDE TRIMMING & SIDE WINDOW (SEDAN)	224
BODY SIDE-FITTING (SEDAN)	225
REAR FENDER, REAR PANEL & REAR PANEL FINISHER (SEDAN)	226
REAR WINDOW GLASS (SEDAN)	227
FRONT DOOR PANEL (SEDAN)	228
FRONT DOOR LOCK & REGULATOR (SEDAN)	229
FRONT DOOR TRIMMING (SEDAN)	230–1
FRONT DOOR FINISH (SEDAN '69 YEAR MODEL)	230–2
FRONT DOOR FINISH (SEDAN '70 YEAR MODEL)	230–3
REAR DOOR PANEL, GLASS & HINGE	231
REAR DOOR LOCK, WINDOW REGULATOR & DOOR HANDLE (SEDAN)	232
REAR DOOR TRIMMING (SEDAN)	233–1
REAR DOOR FINISH	233–2
TRUNK & REAR BUMPER (SEDAN)	234
FRONT SEAT & SLIDE (1) –SEMI SEPARATE TYPE–	235
FRONT SEAT & SLIDE (2) –SEMI SEPARATE TYPE–	235A
FRONT SEAT & SLIDE (BENCH TYPE)	235B
FRONT SEAT & SLIDE (1) –SEPARATE TYPE–	236

© 1972 NISSAN MOTOR CO., LTD.

Printed in Japan

DESCRIPTION	PAGE NO.
FRONT SEAT & SLIDE (2) –SEPARATE TYPE–	236A
CONSOLE BOX	237
REAR SEAT & SLIDE (1) –SEMI SEPARATE TYPE–	238
REAR SEAT & SLIDE (2) –BENCH TYPE–	238A
REAR SEAT & SLIDE (3) –BENCH TYPE–	238B
SAFETY BELT (SEDAN)	239–1
HEAD REST (SEDAN)	239–2
BODY (W & V)	
RADIATOR GRILLE, FRONT BUMPER & OVER RIDER (W & V)	242
FRONT FENDER & HOOD PANEL (W & V)	243
HOOD LOCK CONTROL (W & V)	244
COWL PANEL & FITTING (W & V)	245
DASH PANEL, DASH SIDE PANEL & INSTRUMENT PANEL (W & V R DRIVE)	246
DASH PANEL, DASH SIDE PANEL & INSTRUMENT PANEL (W & V L DRIVE)	246A
DASH & INSTRUMENT TRIMMING (W & V R DRIVE)	247
DASH & INSTRUMENT TRIMMING (W & V L DRIVE)	247A
WINDSHIELD GLASS, WEATHERSTRIP & MOUNTING (W & V)	248
ROOF PANEL & TRIMMING (W & V)	249
FLOOR PANEL & FITTING (W & V)	250
FLOOR CARPET (W & V R DRIVE)	251–1
FLOOR CARPET (W & V L DRIVE)	251–2
FLOOR MAT (W & V R DRIVE)	251A-1
FLOOR MAT (W & V L DRIVE)	251A-2
BODY SIDE PANEL & SILL BODY (W & V)	252
BODY SIDE TRIMMING (W & V)	253
BODY SIDE FITTING (W & V)	254
REAR FENDER & BUMPER (W & V)	255
FRONT DOOR PANEL (W & V)	256
FRONT DOOR LOCK, REGULATOR (W & V)	257
FRONT DOOR TRIMMING (W & V)	258–1
FRONT DOOR FINISH (W & V '69 YEAR MODEL)	258–2
FRONT DOOR FINISH (W & V '70 YEAR MODEL)	258–3
REAR DOOR PANEL, GLASS & HINGE (W & V)	259
REAR DOOR LOCK, WINDOW REGULATOR & DOOR HANDLE (W & V)	260
REAR DOOR TRIMMING (W & V)	261–1
REAR DOOR FINISH (W & V)	261–2
SIDE WINDOW RH (W & V)	262–1
SIDE WINDOW LH (W & V)	262–2
TAIL GATE PANEL, TRIM, LOCK & REAR BUMPER (W & V)	263
TAIL GATE TRIMMING (W & V)	264
FRONT SEAT (BENCH TYPE FOR WAGON)	265–1
FRONT SEAT (BENCH TYPE FOR VAN)	265–2
REAR SEAT (BENCH TYPE FOR WAGON)	266–1
REAR SEAT (BENCH TYPE FOR VAN)	266–2
THIRD SEAT & SLIDE (WAGON)	267
SAFETY BELT (W & V)	268–1
HEAD REST (W & V)	268–2
MISCELLANEOUS	
EMBLEM, MARK & ORNAMENT (1)	271–1
EMBLEM, MARK & ORNAMENT (2)	271–2
EMBLEM, MARK & ORNAMENT (3)	271–3
EMBLEM, MARK & ORNAMENT (4)	271–4
EMBLEM, MARK & ORNAMENT (5)	271–5
EMBLEM, MARK & ORNAMENT (6)	271–6
EMBLEM, MARK & ORNAMENT (7)	271–7
EMBLEM, MARK & ORNAMENT (8)	271–8
CYLINDER LOCK & KEY (SEDAN)	272–1
CYLINDER LOCK & KEY (W & V)	272–2
CYLINDER LOCK & KEY	272–3
BLANK KEY	273
TOOL KIT (SEDAN)	274–1
TOOL KIT (W & V)	274–2
TOOL SETTING	274–3
LONG LIFE COOLANT & N.C.S. SEALER	275
TOUCH–UP PAINT	276
MODEL NO. PLATE	277

© 1972 NISSAN MOTOR CO., LTD.

ELECTRICAL

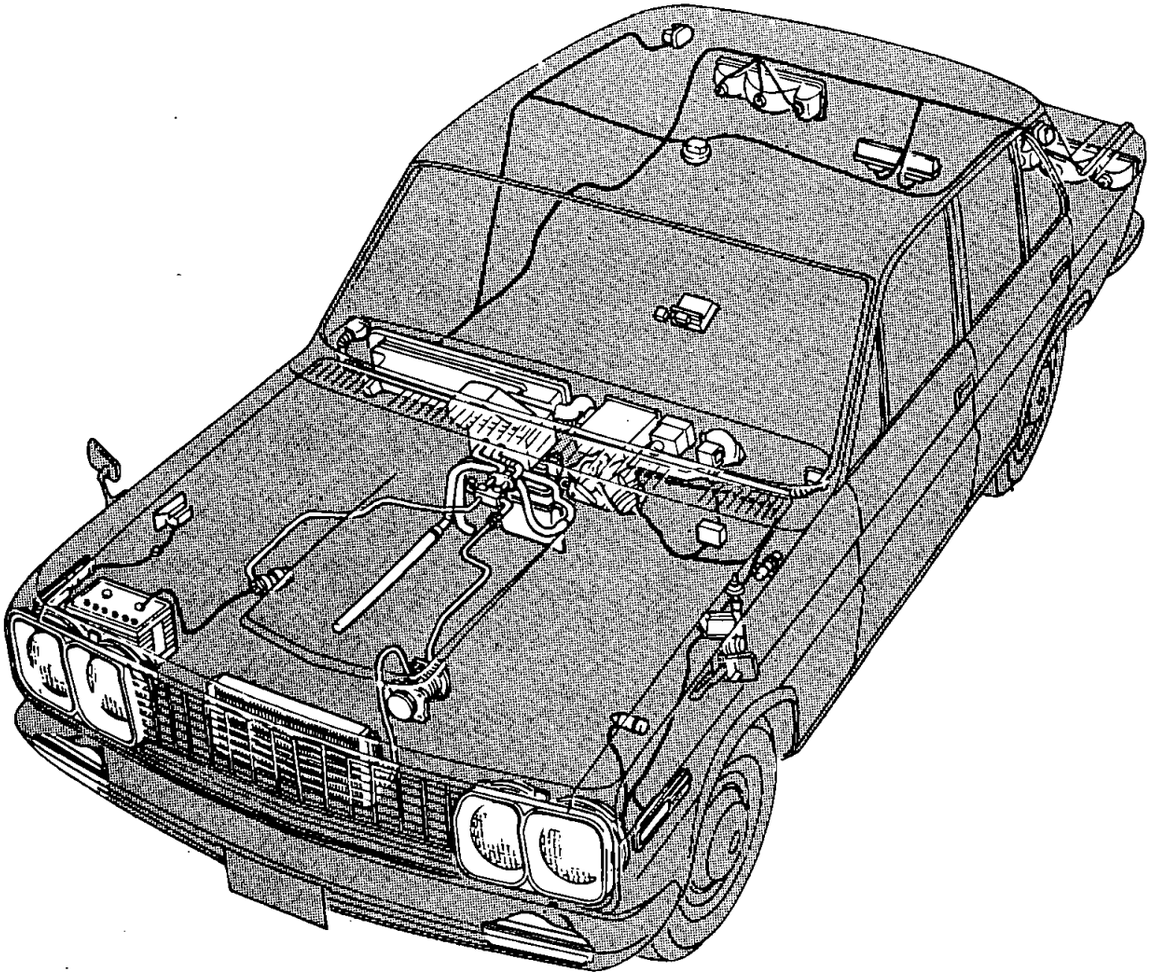

YOU ARE ALL SALESMEN!

You need become familiar with the genuine product or the service being offered so that you can tell any interested customer of its advantages for them.

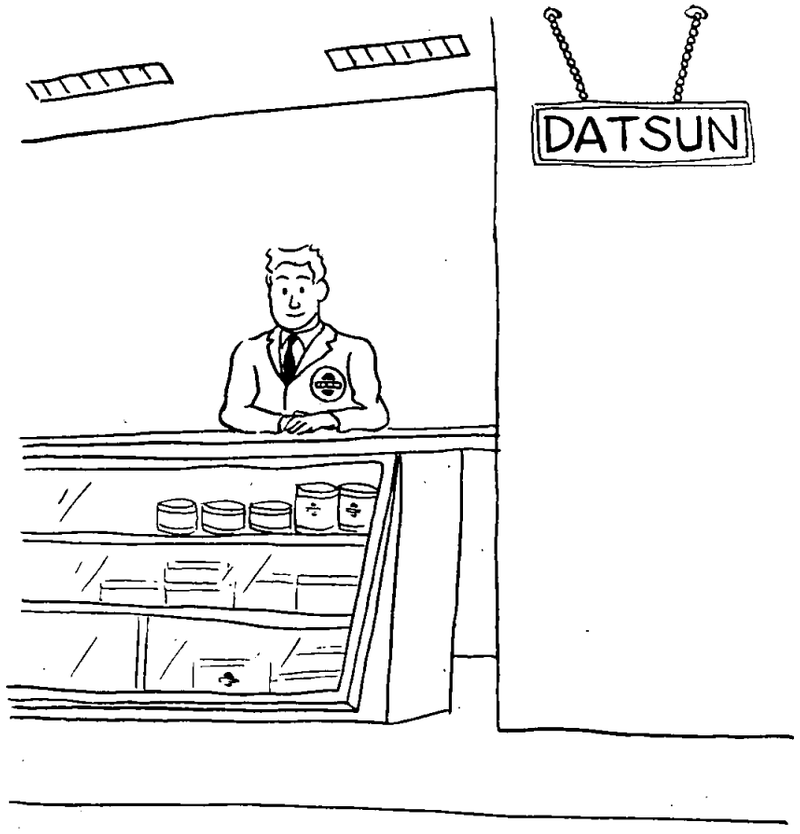

NOTE

Printed in Japan

NISSAN MOTOR CO., LTD.

WIRING (SEDAN '69 YEAR MODEL)

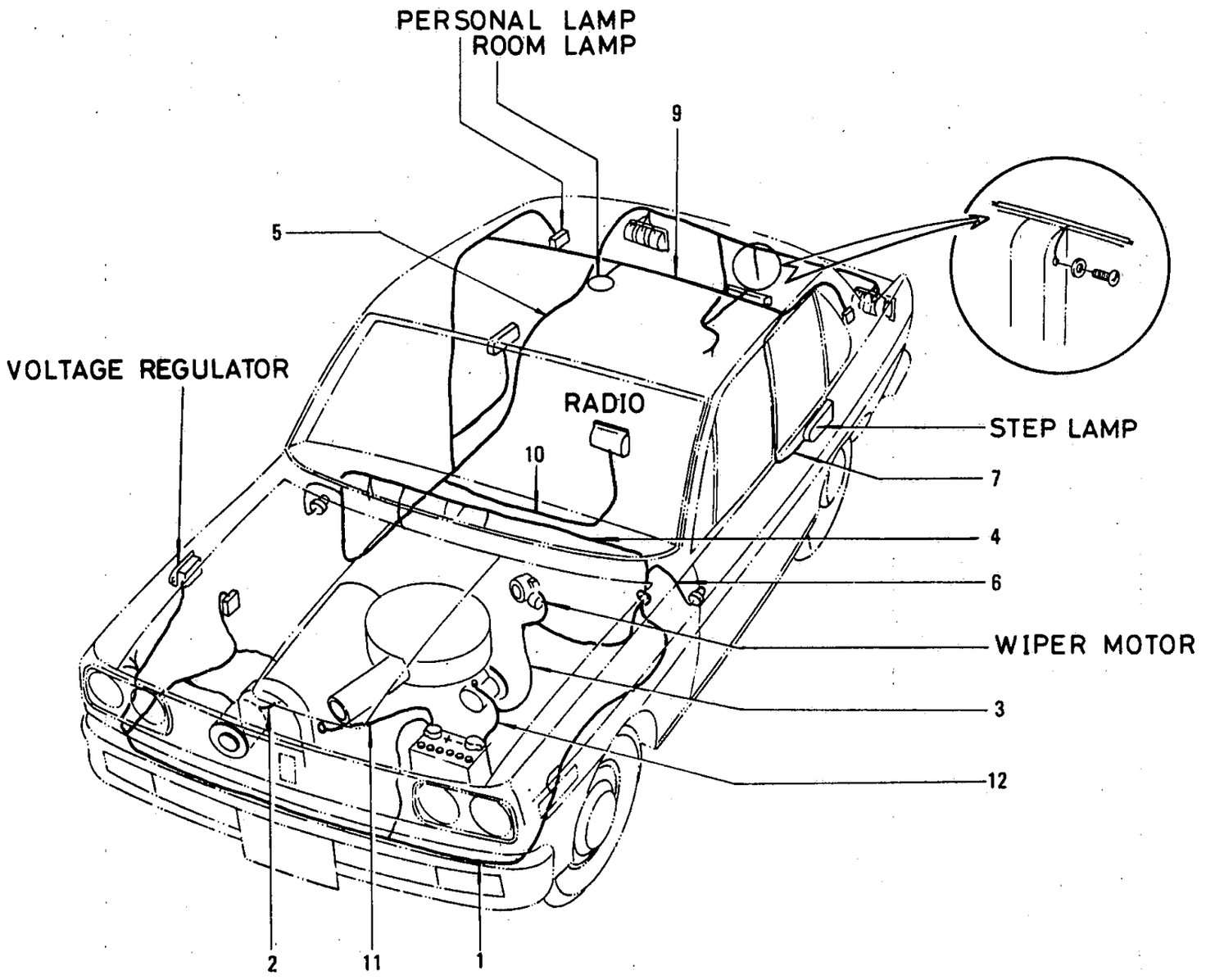

© 1972 NISSAN MOTOR CO., LTD.

REVISED: DECEMBER, 1972

PRINTED IN JAPAN

WIRING (SEDAN '70 YEAR MODEL)

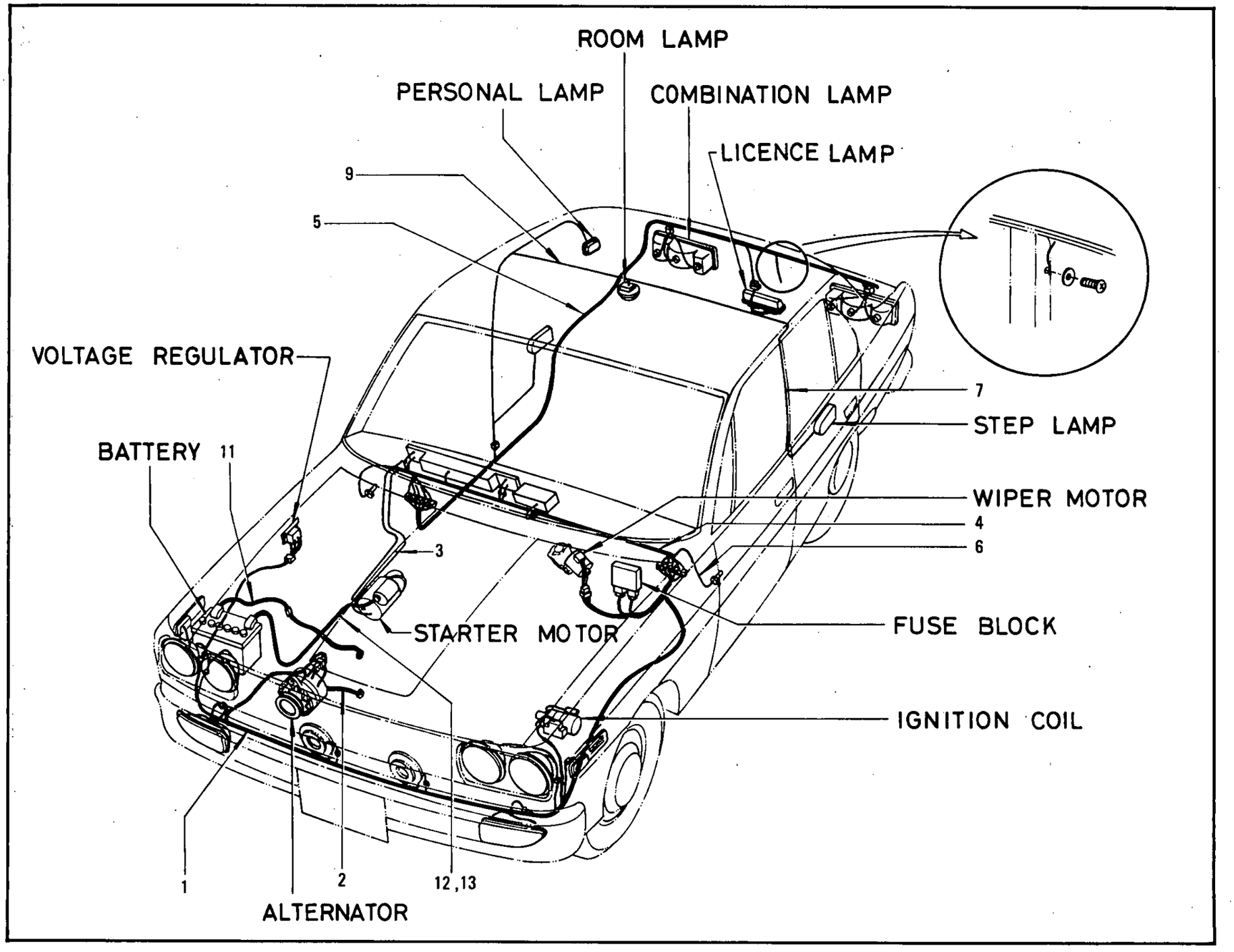

© 1972 NISSAN MOTOR CO., LTD.

PRINTED IN JAPAN

WIRING (W & V '69 YEAR MODEL)

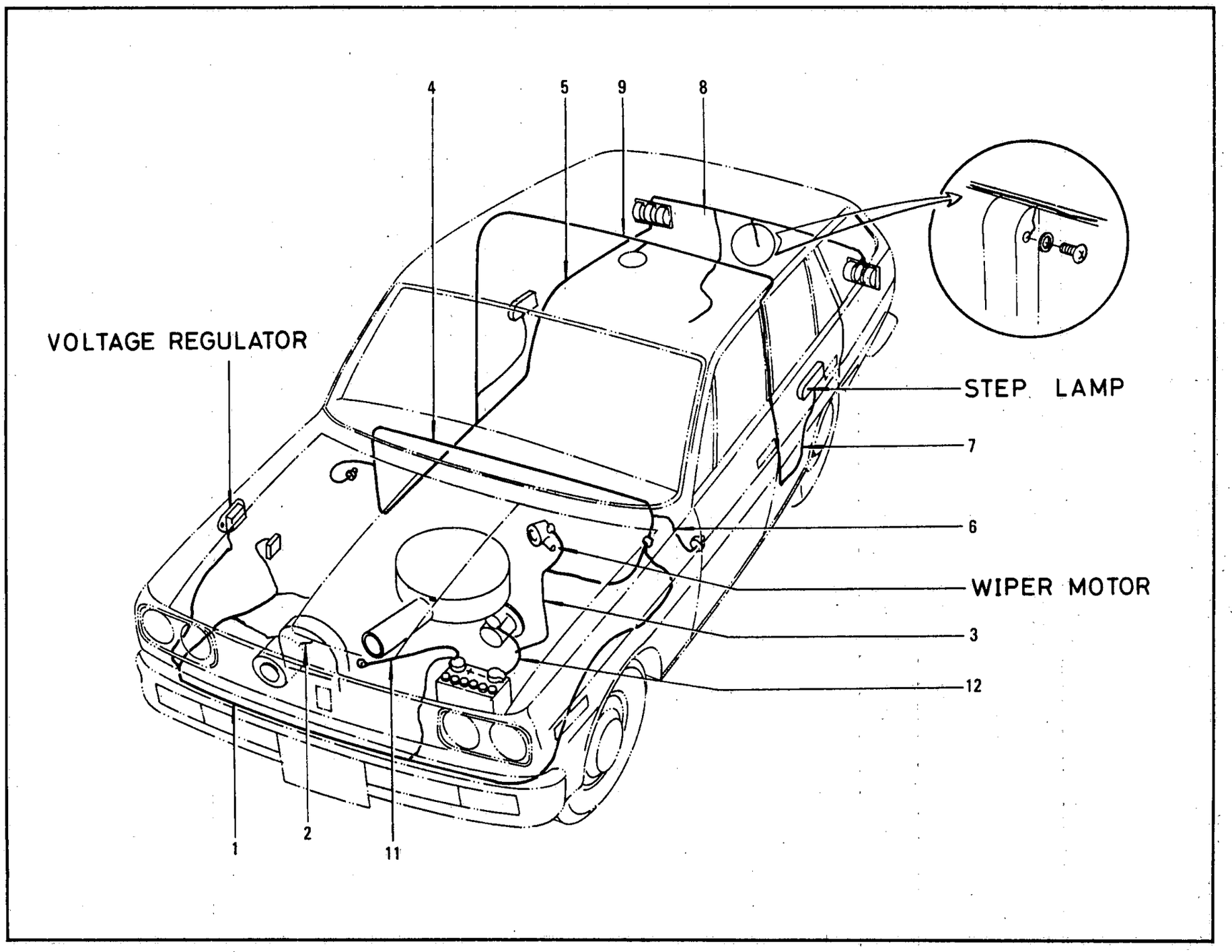

© 1972 NISSAN MOTOR CO., LTD.

ILLUSTRATION 141-3.

REVISED: DECEMBER, 1972

PRINTED IN JAPAN

WIRING (W & V '70 YEAR MODEL)

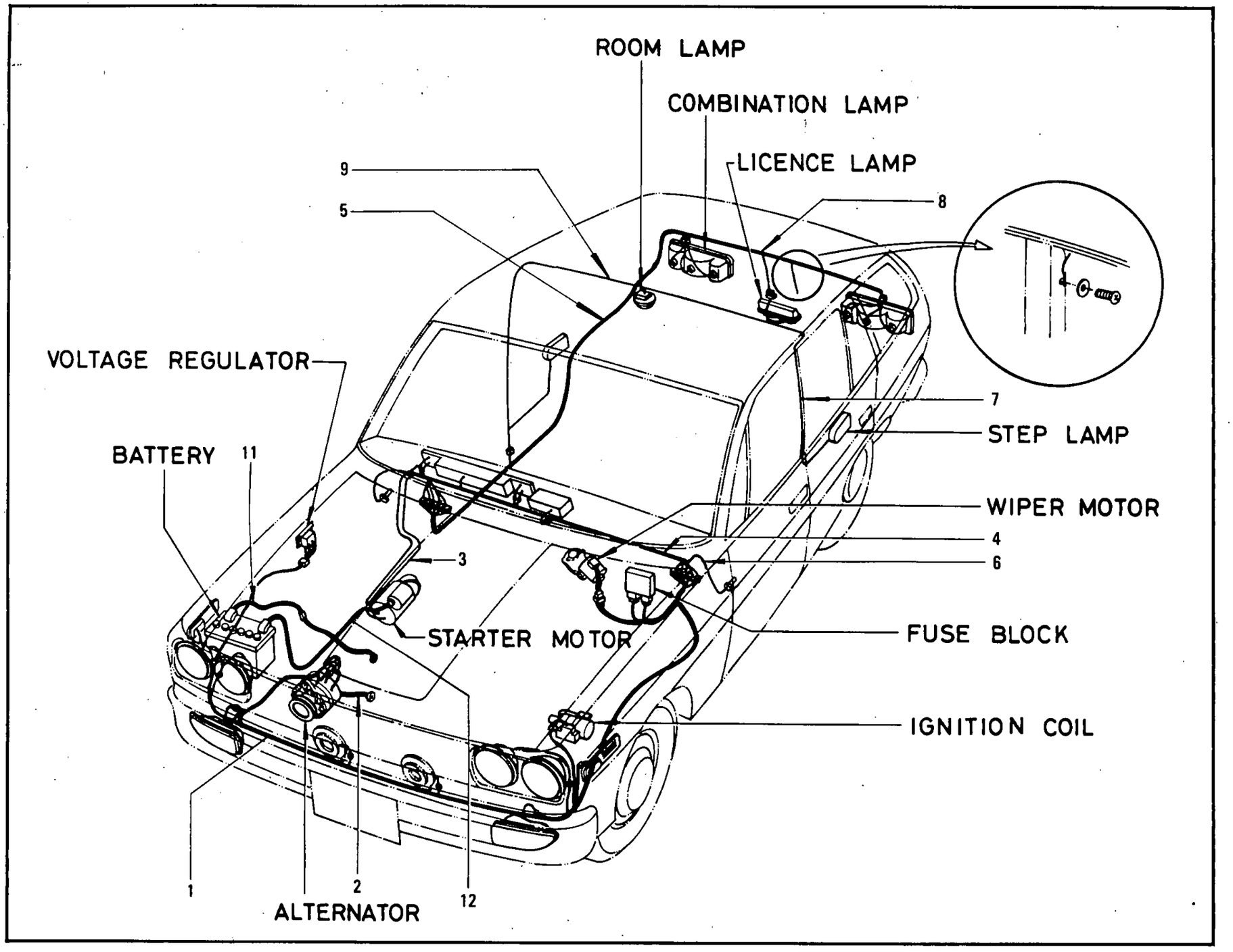

© 1972 NISSAN MOTOR CO., LTD.

PRINTED IN JAPAN

S	KEY NO.	PART NO.	DESCRIPTION	Q'TY	UNIT PKG FOR DIST.	APPLIED MODEL	APPLIED DATE FROM	APPLIED DATE UP TO	ICA N	ICA F	SUPERSEDED
	101	24012-E0710	COMP-CABLE ENGINE ROOM HARNESS	1	1	STANDARD R DRIVE					
	02	24012-E0715	COMP-CABLE ENGINE ROOM HARNESS	1	1	STANDARD R DRIVE			N	N	24012-E0710
	03	24012-E1300	COMP-CABLE ENGINE ROOM HARNESS	1	1	STANDARD L DRIVE					
	04	24012-E1305	COMP-CABLE ENGINE ROOM HARNESS	1	1	STANDARD L DRIVE			N	N	24012-E1300
	05	24012-E1700	COMP-CABLE ENGINE ROOM HARNESS	1	1	SUPER PERSONAL 2300 R DRIVE		0969			
	06	24012-E1705	COMP-CABLE ENGINE ROOM HARNESS	1	1	SUPER PERSONAL 2300 R DRIVE		0969	N	N	24012-E1700
	07	24012-E1800	COMP-CABLE ENGINE ROOM HARNESS	1	1	SUPER PERSONAL 2300 L DRIVE		0969			
	08	24012-E1805	COMP-CABLE ENGINE ROOM HARNESS	1	1	SUPER PERSONAL 2300 L DRIVE		0969	N	N	24012-E1800
	09	24012-E0210	COMP-CABLE ENGINE ROOM HARNESS	1	1	DELUXE PERSONAL WAGON & VAN R DRIVE		0969			
	10	24012-E0215	COMP-CABLE ENGINE ROOM HARNESS	1	1	DELUXE PERSONAL WAGON & VAN R DRIVE		0969	N	N	24012-E0210
	11	24012-E1200	COMP-CABLE ENGINE ROOM HARNESS	1	1	DELUXE PERSONAL WAGON & VAN L DRIVE		0969			
	12	24012-E1205	COMP-CABLE ENGINE ROOM HARNESS	1	1	DELUXE PERSONAL WAGON & VAN L DRIVE		0969	N	N	24012-E1200
	13	24012-E0910	CABLE-ENGINE ROOM HARNESS	1	1	DIESEL R DRIVE					
	14	24012-E0915	CABLE-ENGINE ROOM HARNESS	1		DIESEL R DRIVE			N	N	24012-E0910
	15	24012-E1900	COMP-CABLE ENGINE ROOM HARNESS	1	1	DIESEL L DRIVE					

NOTE:

© 1972 NISSAN MOTOR CO., LTD.

REVISED: DECEMBER, 1972
PRINTED IN JAPAN

S	KEY NO.	PART NO.	DESCRIPTION	Q'TY	UNIT PKG FOR DIST.	APPLIED MODEL	APPLIED DATE FROM	APPLIED DATE UP TO	ICA N	ICA F	SUPERSEDED
	116	24012-E1910	COMP-CABLE ENGINE ROOM HARNESS FOR STRG LOCK	1	1	OP DIESEL L DRIVE		0969			
	17	24012-E3702	COMP-CABLE ENGINE ROOM HARNESS FOR STRG LOCK	1	1	DIESEL L DRIVE	1069				
	201	24027-73400	CABLE-ALTERNATOR EARTH	1	5	SUPER PERSONAL 2300		0969			
	02	24027-78000	CABLE-ALTERNATOR EARTH	1	1	DELUXE PERSONAL WAGON & VAN		0969			
	301	24022-E0100	CABLE-ENGINE ROOM HARNESS TO STARTER MOTER	1	5	ALL		0969			
	02	24022-E3200	CABLE-ENGINE ROOM HARNESS TO STARTER MOTER	1	10	ALL R DRIVE EXC STANDARD	1069				
	03	24022-E3200	CABLE-ENGINE ROOM HARNESS TO STARTER MOTOR	1	10	ALL L DRIVE EXC STANDARD	1069				
	04	24022-E3200	CABLE-ENGINE ROOM HARNESS TO STARTER MOTOR	1	10	STANDARD R DRIVE	1069				
	05	24022-E3200	CABLE-ENGINE ROOM HARNESS TO STARTER MOTOR	1	10	STANDARD L DRIVE	1069				
	06	24022-E3200	CABLE-ENGINE ROOM HARNESS TO STARTER MOTOR	1	10	DIESEL R DRIVE	1069				
	07	24022-E3200	CABLE-ENGINE ROOM HARNESS TO STARTER MOTOR	1	10	DIESEL L DRIVE	1069				
	401	24013-E0211	COMP-CABLE INSTRUMENT HARNESS	1	1	DELUXE PERSONAL STANDARD R DRIVE		0969			
	02	24013-E1201	COMP-CABLE INSTRUMENT HARNESS	1	1	DELUXE PERSONAL STANDARD L DRIVE		0969			
	03	24013-E0411	COMP-CABLE INSTRUMENT HARNESS	1	1	WAGON & VAN R DRIVE		0969			
	04	24013-E1401	COMP-CABLE INSTRUMENT HARNESS	1	1	WAGON & VAN L DRIVE		0969			

NOTE:

© 1972 NISSAN MOTOR CO., LTD.

PRINTED IN JAPAN

S	KEY NO.	PART NO.	DESCRIPTION	Q'TY	UNIT PKG FOR DIST.	APPLIED MODEL	APPLIED DATE FROM	APPLIED DATE UP TO	ICA N	ICA F	SUPERSEDED
	405	24013-E0911	COMP-CABLE INSTRUMENT HARNESS	1	1	DIESEL R DRIVE					
	06	24013-E1901	COMP-CABLE INSTRUMENT HARNESS	1	1	DIESEL L DRIVE					
	07	24013-E1905	COMP-CABLE INSTRUMENT HARNESS FOR STRG LOCK	1	1	OP DIESEL L DRIVE					
	501	24014-E3100	BODY-HARNESS	1	1	SUPER	1069				
	02	24014-E1200	BODY-HARNESS	1	1	CUSTOM	1069				
	03	24014-E0201	BODY-HARNESS	1	1	DELUXE R DRIVE		0969			
	04	24014-E0300	BODY-HARNESS	1	1	PERSONAL 2300 STANDARD R DRIVE		0969			
	05	24014-E1300	BODY-HARNESS	1	1	PERSONAL 2300 STANDAARD L DRIVE		0969			
	06	24014-E1300	BODY-HARNESS	1	1	P-DX2000 P-DX2400 STANDARD	1069				
	07	24014-E0400	BODY-HARNESS	1	1	VAN R DRIVE		0969			
	08	24014-E1400	BODY-HARNESS	1	1	VAN L DRIVE		0969			
	09	24014-E1500	BODY-HARNESS	1	1	VAN-DELUXE	1069				
	10	24014-E1500	BODY-HARNESS	1	1	WAGON		0969			
	601	24161-73400	CABLE-INSTRUMENT HARNESS TO LH DOOR	1	5	ALL					
	701	24166-73000	CABLE-STEP LAMP	2	1	SUPER CUSTOM WAGON					
*	801	24157-E0400	REAR-LAMP CABLE	1	1	WAGON & VAN					
	02	24157-E0499	REAR-LAMP CABLE	1	1	WAGON & VAN			Y	Y	24157-E0400
	901	24160-E0300	ASSY-CABLE ROOM LANP	1	5	SEDAN EXC SUPER DELUXE					

NOTE:

© 1972 NISSAN MOTOR CO., LTD.

REVISED: DECEMBER, 1972
PRINTED IN JAPAN

S	KEY NO.	PART NO.	DESCRIPTION	Q'TY	UNIT PKG FOR DIST.	APPLIED MODEL	APPLIED DATE FROM	APPLIED DATE UP TO	ICA N	ICA F	SUPERSEDED
	9 02	- 24160-E0100	ASSY-CABLE ROOM LAMP	1	1	SUPER DELUXE					
	03	- 24160-E0200	ASSY-CABLE ROOM LAMP	1	5	WAGON					
	10 01	- 24177-E0200	CABLE-SEAT BACK SWITCH	1	1	DELUXE PERSONAL WAGON R DRIVE		09 69			
	02	- 24177-E0100	SEAT-BACK HARNESS	1	1	SUPER	10 69				
	03	- 24177-E0200	SEAT-BACK HARNESS	1	1	CUSTOM	10 69				
	11 01	- 24080-E1700	CABLE-GROUND CNNECTION BATTERY	1	1	SUPER PERSONAL 2300					
	02	- 24080-E0100	CABLE-GROUND CONN BATTERY 2SMB BATTERY	1	1	STANDARD R DRIVE					
	03	- 24080-E0900	CABLE-GROUND CONNECTION BATTERY	1	1	DIESEL					
	04	- 24080-E1200	CABLE-GROUND CONNECTION BATTERY	1	1	STANDARD L DRIVE					
	05	- 24080-E1200	CABLE-GROUND CONN BATTERY FOR 2SMB BATTERY	1	1	SEDAN EXC STANDARD					
	06	- 24080-E3300	CABLE-GROUND CONNECTION BATTERY	1	1	ALL EXC STANDARD					
	07	- 24080-E1200	CABLE-GROUND CONNECTION BATTERY	1	1	STANDARD					
	08	- 24080-E0900	CABLE-GROUND CONNECTION BATTERY	1	1	DIESEL					
	12 01	- 24110-E1700	CABLE-STARTER MOTOR TO BATTERY	1		L23		09 69			
	02	- 24110-E0200	CABLE-STARTER MOTOR TO BATTERY	1	1	J20		09 69			
	03	- 24110-E3300	CABLE-STARTER MOTOR TO BATTERY	1	5	L24 L20A	10 69				
	04	- 24110-E1300	CABLE-STARTER MOTOR TO BATTERY	1	1	H20		09 69			

NOTE:

© 1972 NISSAN MOTOR CO., LTD.

PRINTED IN JAPAN

S	KEY NO.	PART NO.	DESCRIPTION	Q'TY	UNIT PKG FOR DIST.	APPLIED MODEL	APPLIED DATE FROM	APPLIED DATE UP TO	ICA N	ICA F	SUPERSEDED
	1205	24110-E3700	CABLE-STARTER MOTOR TO BATTERY	1	1	H20	1069				
	06	24110-E0900	CABLE-REVERSE LAMP SWITCH	1	1	SD22		0969			
	1301	24110-E3401	CABLE-STARTER MOTOR TO BATTERY	1	1	SD22	1069				
	1401	24170-E0101	INHIBITOR-HARNESS	1	1	ALL					
	02	24170-E3200	INHIBITOR-HARNESS	1	1	AUTOMATIC					
	1501	24250-E0100	GROMMET	1	5	R DRIVE					
	02	24250-E1200	GROMMET	1	5	L DRIVE					
	1601	24257-10600	GROMMET	1	5	R DRIVE					
	02	24257-10600	GROMMET	4	5	SUPER CUSTOM					
	03	24257-10600	GROMMET	2	5	P-DX2000 P-DX2400 STANDARD DIESEL					
	1701	24335-E0100	CABLE-FUEL PUMP	1	1	OP ALL EXC VAN-DELUXE WAGON DIESEL					

NOTE:

© 1972 NISSAN MOTOR CO., LTD.

REVISED: DECEMBER, 1972
PRINTED IN JAPAN

NOTE

Printed in Japan

NISSAN MOTOR CO., LTD.

SWITCH, FLASHER UNIT & CIGARETTE LIGHTER (R DRIVE)

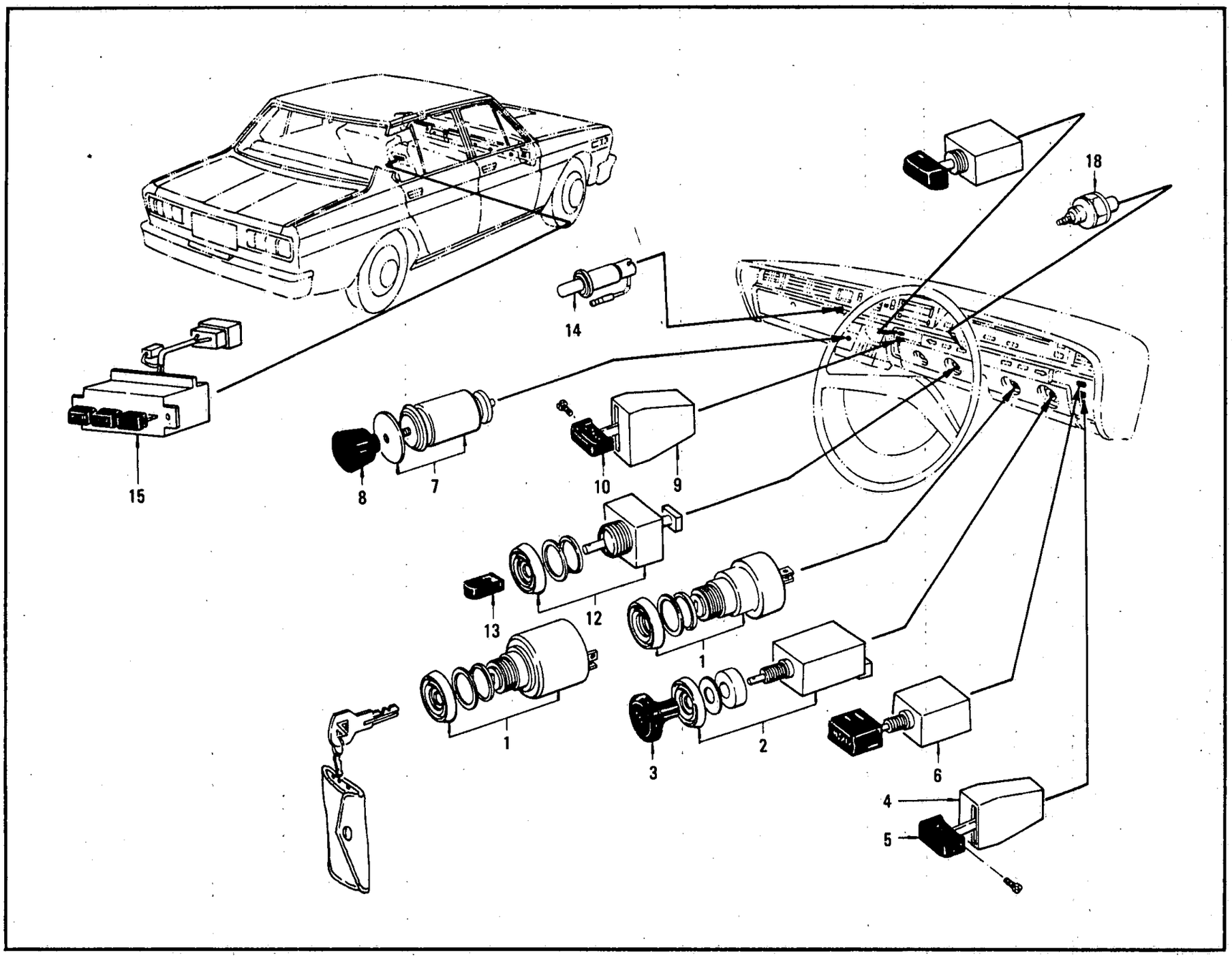

ILLUSTRATION 142 -1

© 1972 NISSAN MOTOR CO., LTD.

REVISED: DECEMBER, 1972

PRINTED IN JAPAN

SWITCH, FLASHER UNIT & CIGARETTE LIGHTER (L DRIVE)

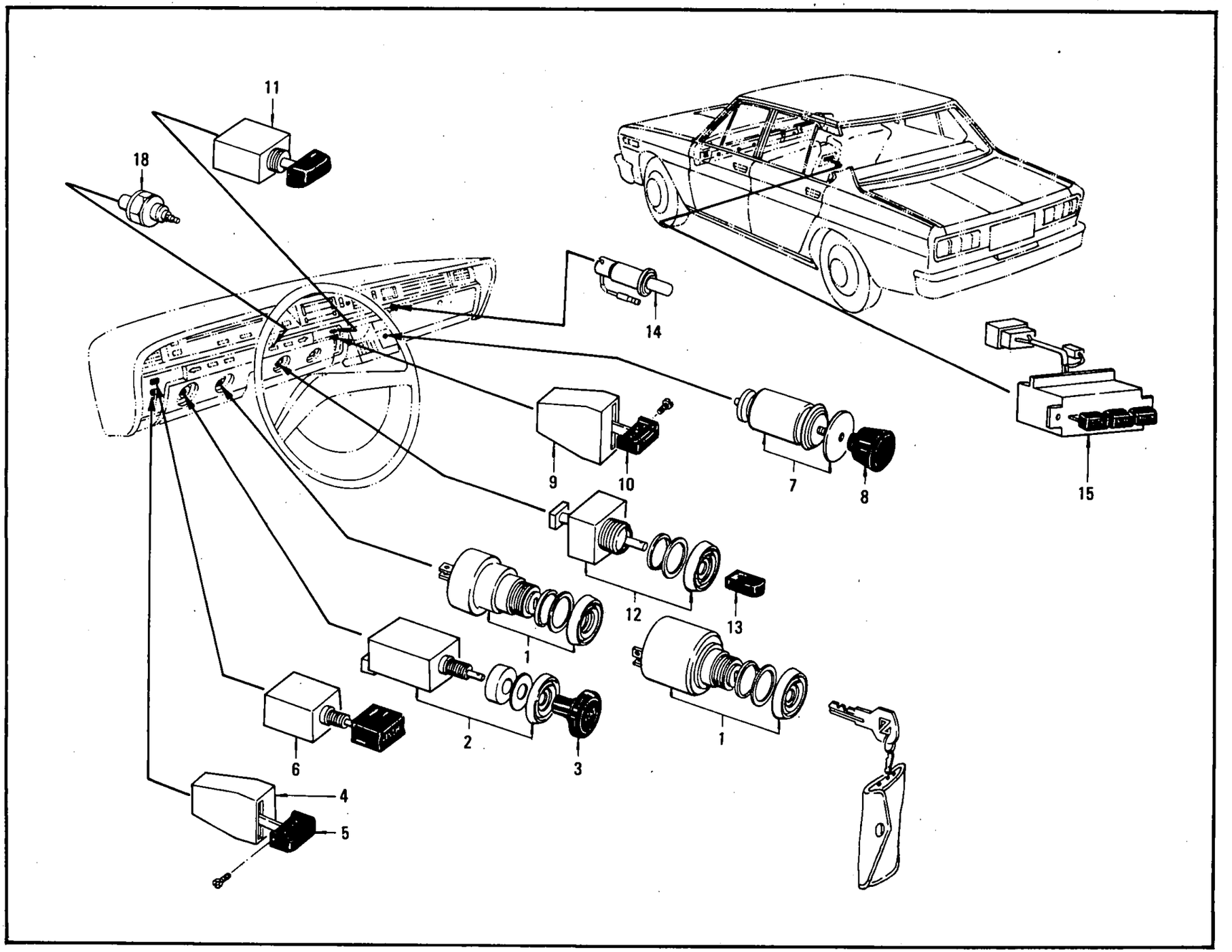

© 1972 NISSAN MOTOR CO., LTD.

PRINTED IN JAPAN

FUSE BLOCK, HORN & RELAY

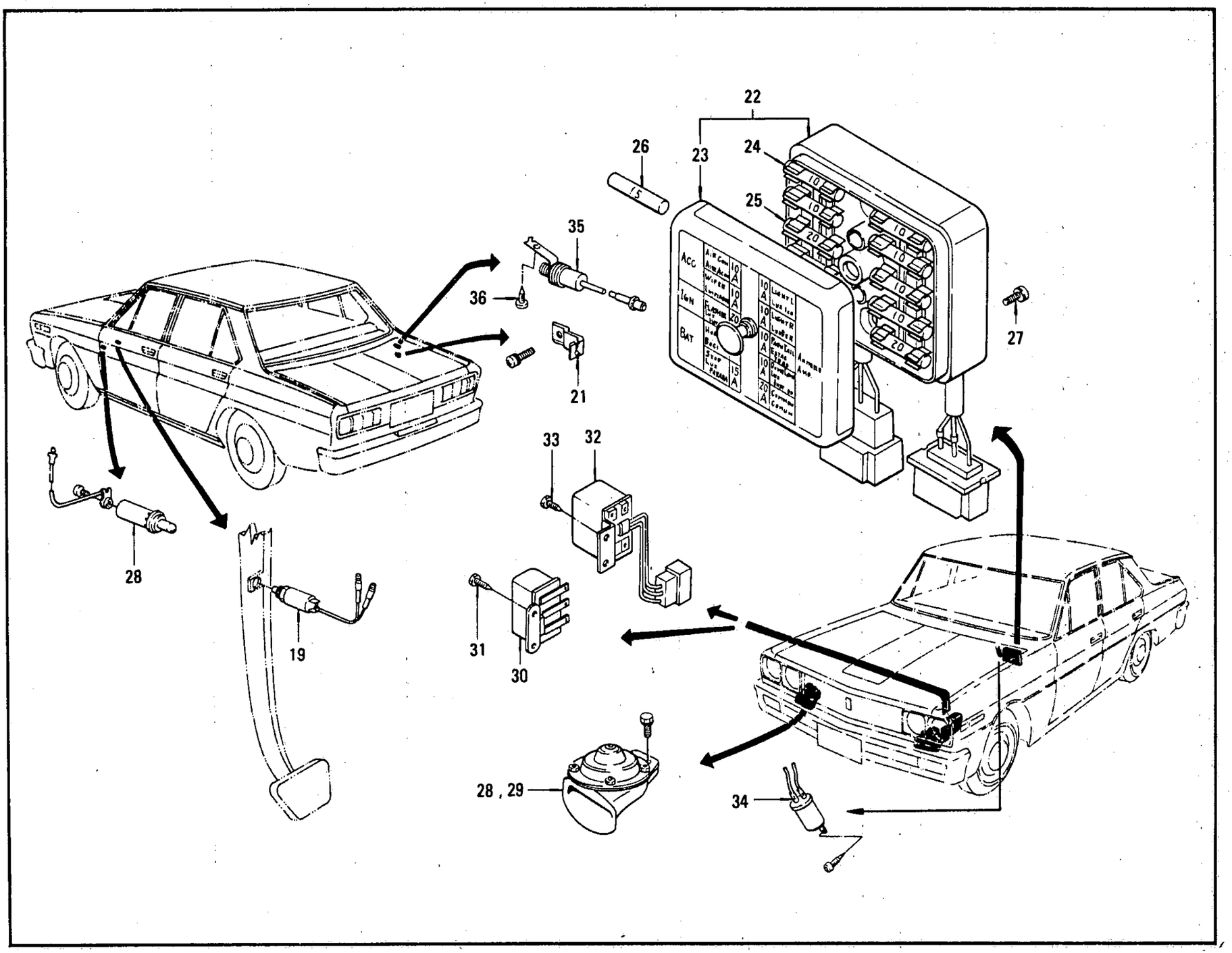

© 1972 NISSAN MOTOR CO., LTD.

ILLUSTRATION **142-3**

REVISED: DECEMBER, 1972

PRINTED IN JAPAN

C

SWITCH, FLASHER UNIT & CIGARETTE LIGHTER

S	KEY NO.	PART NO.	DESCRIPTION	Q'TY	UNIT PKG FOR DIST	APPLIED MODEL	APPLIED DATE FROM	APPLIED DATE UP TO	ICA N	ICA F	SUPERSEDED
	101	25150-E0100	ASSY-SWITCH IGNITION & STARTER	1	1	ALL EXC DIESEL		0969			
	02	25150-E0100	ASSY-SWITCH IGNITION & STARTER	1	1	VAN-DX STANDARD	1069				
	03	25150-E0900	ASSY-SWITCH IGNITION & STARTER	1	1	DIESEL					
	201	25160-E0100	ASSY-SWITCH LIGHTING	1	1	ALL					
	301	25165-E0100	KNOB-LIGHTING SWITCH	1	5	ALL					
	401	25260-E0100	ASSY-SWITCH WIPER	1	1	ALL					
	501	25265-E0100	KNOB-WIPER SWITCH	1	5	ALL					
	601	25270-E0100	ASSY-SWITCH WASHER	1	5	ALL					
	701	25330-E0100	COMP-CIGARETTE LIGHTER	1	1	ALL					
	801	25335-E0100	ASSY-KNOB CIGARETTE LIGHTER	1	5	ALL					
	901	25280-E0100	ASSY-SWITCH ILLUMINATION	1	5	DELUXE SUPER WAGON		0969			
	02	25280-E0100	ASSY-SWITCH ILLUMINATION	1	5	SUPER CUSTOM WAGON OP ALL	1069				
	1001	25285-E0100	KNOB-ILLUMINATION SWITCH	1	5	DELUXE SUPER WAGON		0969			
	02	25285-E0100	KNOB-ILLUMINATION SWITCH	1	5	SUPER CUSTOM WAGON OP ALL	1069				
	1101	25290-E0100	ASSY-SWITCH HAZARD WARNING	1	1	L DRIVE					
	1201	25740-E0400	ASSY-SWITCH SIDE WINDOW	1	1	WAGON & VAN					
*	1301	25745-E0400	KNOB-SWITCH SIDE WINDOW	1		WAGON & VAN					
	1401	25720-73000	COMP-SWITCH GLOVE BOX LAMP	1	5	ALL					
*	1501	25550-F0100	COMP-SWITCH TURN SIGNAL & LIGHTING	1	1	R DRIVE					

NOTE:

© 1972 NISSAN MOTOR CO., LTD.

PRINTED IN JAPAN

SWITCH, FLASHER UNIT & CIGARETTE LIGHTER

S	KEY NO.	PART NO.	DESCRIPTION	Q'TY	UNIT PKG FOR DIST.	APPLIED MODEL	APPLIED DATE FROM	APPLIED DATE UP TO	ICA N	ICA F	SUPERSEDED
	1502	25550-E0102	COMP-SWITCH TURN SIGNAL & LIGHTING	1	1	R DRIVE			Y	N	25550-E0100
*	03	25550-E1200	COMP-SWITCH TURN SIGNAL & LIGHTING	1	1	L DRIVE					
	04	25550-F1202	COMP-SWITCH TURN SIGNAL & LIGHTING	1		L DRIVE	1069		Y	N	25550-E1200
*	05	25550-E1210	COMP-SWITCH TURN SIGNAL & LIGHTING WITH PASSING	1	1	L DRIVE					
	06	25550-E1212	COMP-SWITCH TURN SIGNAL & LIGHTING WITH PASSING	1		L DRIVE			Y	N	25550-E1210
*	1601	25550-E0110	COMP-SWITCH T/S & LIGHTING WITH PASSING L/S	1	1	OP SUPER		0969			
*	02	25550-E0110	COMP-SWITCH T/S & LIGHTING WITH PASSING L/S	1	1	R DRIVE	1069				
	03	25550-E0112	COMP-SWITCH T/S & LIGHTING WITH PASSING L/S	1	1	R DRIVE	1069		Y	N	25550-E0110
	1701	25552-E3200	UNIT-SWITCH TURN SIGNAL & LIGHTING	1	1	ALL					
	1801	25240-89902	ASSY-SWITCH OIL PRESSURE	1	10	ALL					
*	02	25240-89901	ASSY-SWITCH OIL PRESSURE	1		ALL			Y	Y	25240-89902
*	1901	25320-89900	ASSY-SWITCH STOP LAMP	1	10	ALL		0969			
	02	25320-89901	ASSY-SWITCH STOP LAMP	1	10	ALL		0969	Y	N	25320-89900
	03	25320-89910	ASSY-SWITCH STOP LAMP	1	1	ALL	1069				
	2001	25360-89900	ASSY-SWITCH DOOR	5	5	SEDAN		0969			
	02	25360-89900	ASSY-SWITCH DOOR	5	5	SUPER CUSTOM OP SEDAN	1069				
	03	25360-89900	ASSY-SWITCH DOOR	3	5	SEDAN EXC SUPER CUSTOM	1069				

NOTE:

© 1972 NISSAN MOTOR CO., LTD.

REVISED: DECEMBER, 1972
PRINTED IN JAPAN

SWITCH, FLASHER UNIT & CIGARETTE LIGHTER

S	KEY NO.	PART NO.	DESCRIPTION	Q'TY	UNIT PKG FOR DIST.	APPLIED MODEL	APPLIED DATE FROM	APPLIED DATE UP TO	ICA N	ICA F	SUPERSEDED
	2004	25360-89900	ASSY-SWITCH DOOR	2	5	VAN-DELUXE	1069				
	05	25360-89910	ASSY-SWITCH DOOR	4	5	WAGON	1069				
	06	25360-89900	ASSY-SWITCH DOOR	4	5	WAGON	1069				
	2101	25729-73000	BRACKET-TRUNK ROOM	1	5	SEDAN		0969			
	2201	25410-E0111	ASSY-BLOCK FUSE	1	1	ALL					
	2301	25411-E4910	COVER-FUSE BLOCK	1	1	ALL			N	N	25410-E4910
*	2401	25461-89901	FUSE 10A	6	100	ALL					
	02	08941-11000	FUSE 10A	6	100	ALL			Y	N	25461-89901
*	2501	25462-89901	FUSE 20A	4	10	ALL					
	02	08941-12000	FUSE 20A	4	50	ALL		0969	Y	N	25462-89901
*	2601	25415-89901	FUSE 15A	2	1	ALL					
	02	08941-11500	FUSE 15A	2	100	ALL			Y	N	25415-89901
*	03	25415-89900	FUSE-15A	2	1	ALL			Y	Y	25415-89900
*	04	25415-89901	FUSE-15A	1	1	ALL					
	05	08941-11500	FUSE-15A	1	100	ALL		0969	Y	N	25415-89901
	2701	00314-02514	P/H C/R MACHINE SWITCH SPRING LOCK W #10	2	50	ALL					
	2801	26310-E0100	ASSY-HORN ELECTRIC HIGH 12V	1	1	ALL					
	2901	26330-E0100	ASSY-HORN ELECTRIC LOW 12V	1	1	ALL					
	3001	26320-89905	RELAY-HORN	1	1	ALL					
*	3101	00511-01010	P/H TAPPING SCREW #10X10	2	50	ALL					
	02	00511-01012	P/H-TAPPING SCREW #10X10	2	50	ALL	1069		Y	N	00511-01010
	3201	25230-89921	ASSY-RELAY TYPER-1	1	1	ALL					

NOTE:

© 1972 NISSAN MOTOR CO., LTD.

PRINTED IN JAPAN

SWITCH, FLASHER UNIT & CIGARETTE LIGHTER

S	KEY NO.	PART NO.	DESCRIPTION	Q'TY	UNIT PKG FOR DIST.	APPLIED MODEL	APPLIED DATE FROM	APPLIED DATE UP TO	ICA N	ICA F	SUPERSEDED
*	3301	00511-01010	P/H TAPPING SCREW #10X10	2	50	ALL					
	02	00511-01012	P/H-TAPPING SCREW #10X10	2	50	ALL	1069		Y	N	00511-01010
	3401	25520-13200	FLASHER-UNIT 12V 60W	1	5	ALL	1069				
	02	25520-89900	FLASHER-UNIT 12V 60W	1	5	L DRIVE		0969	Y	Y	25520-13200
	03	25519-89999	FLASHER-UNIT 12V 85W	1	1	ALL	1069		Y	N	25520-89902
	04	25519-89998	FLASHER-UNIT 12V 110W	1	1	ALL			Y	N	25520-89903
	3501	25800-89901	ASSY-SWITCH MERCURY	1	5	WAGON & VAN					
*	3601	00511-01010	P/H TAPPING SCREW #10X10	1	50	WAGON & VAN					
	02	00511-01012	P/H-TAPPING SCREW #10X10	1	50	WAGON & VAN			Y	N	00511-01010
	3701	25230-89903	ASSY-RELAY TYPE K-3	1	1	L DRIVE OP R DRIVE		0969			
	02	25230-89903	ASSY-RELAY TYPE K-3	1	1	OP ALL	1069				
	3801	25330-E0102	COMP-CIGARETTE LIGHTER REAR	1	1	SUPER CUSTOM					
	3901	25730-E0400	SWITCH-WINDOW REGULATOR	1	1	WAGON & VAN					
	4001	25230-89907	ASSY-RELAY TYPE K7 FOR STEERING LOCK CAR	2	1	OP DIESEL L DRIVE					

NOTE:

© 1972 NISSAN MOTOR CO., LTD.

REVISED: DECEMBER, 1972
PRINTED IN JAPAN

NOTE

Printed in Japan

NISSAN MOTOR CO., LTD.

INSTRUMENT METER & CLOCK (R DRIVE '69 YEAR MODEL)

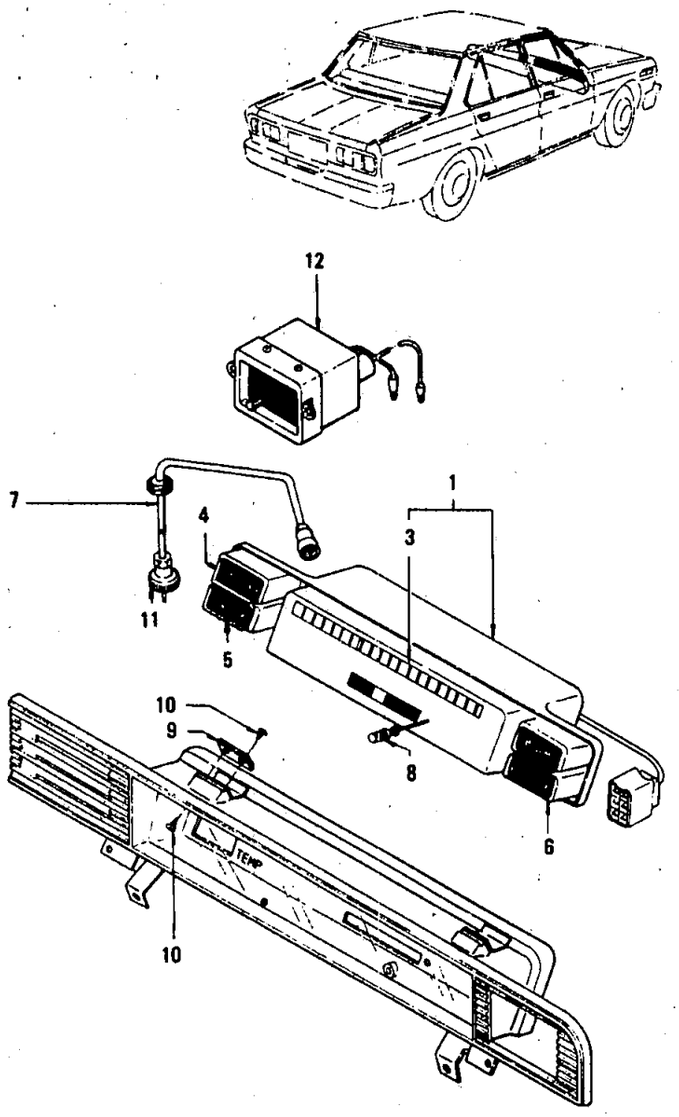

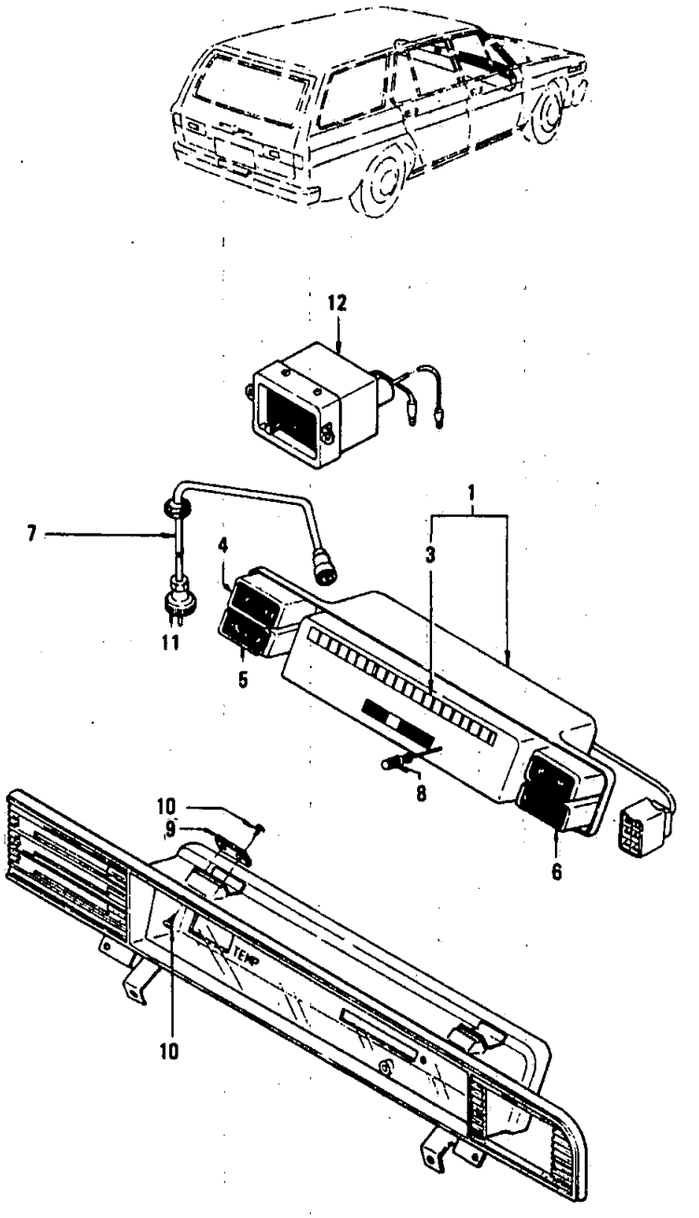

ILLUSTRATION **143-1**

© 1972 NISSAN MOTOR CO., LTD.

REVISED: DECEMBER, 1972

PRINTED IN JAPAN

C

INSTRUMENT METER & CLOCK (L DRIVE '69 YEAR MODEL)

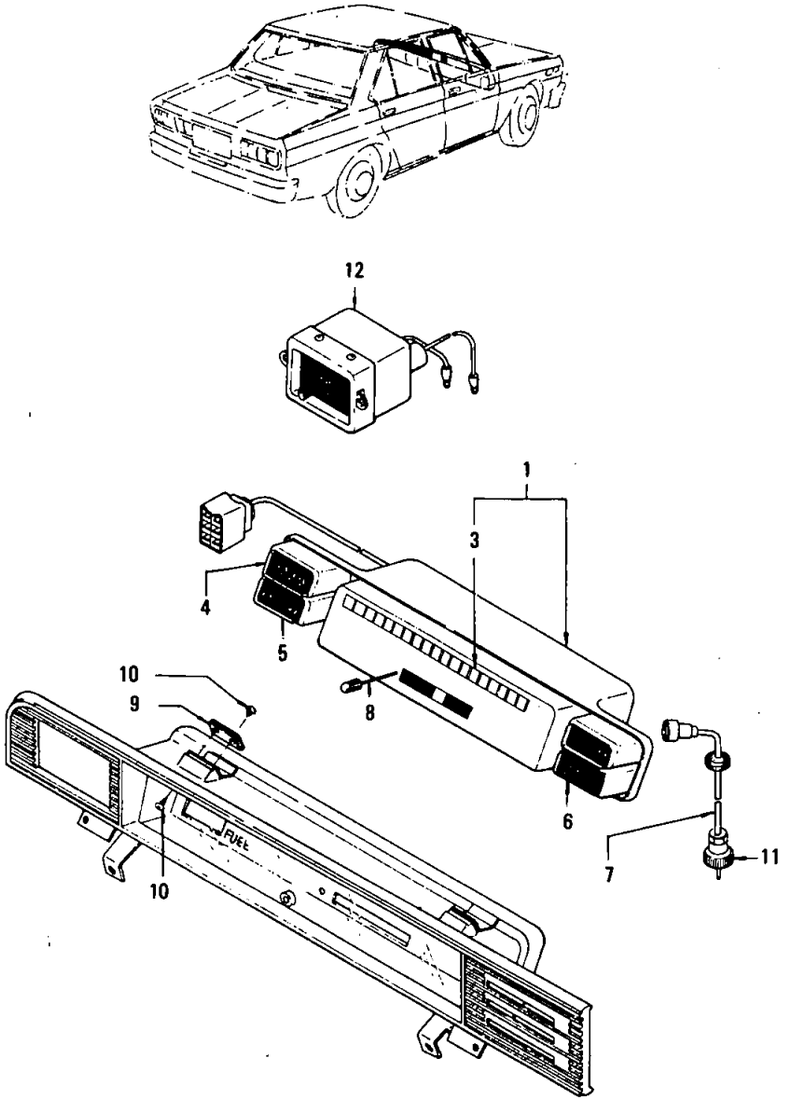

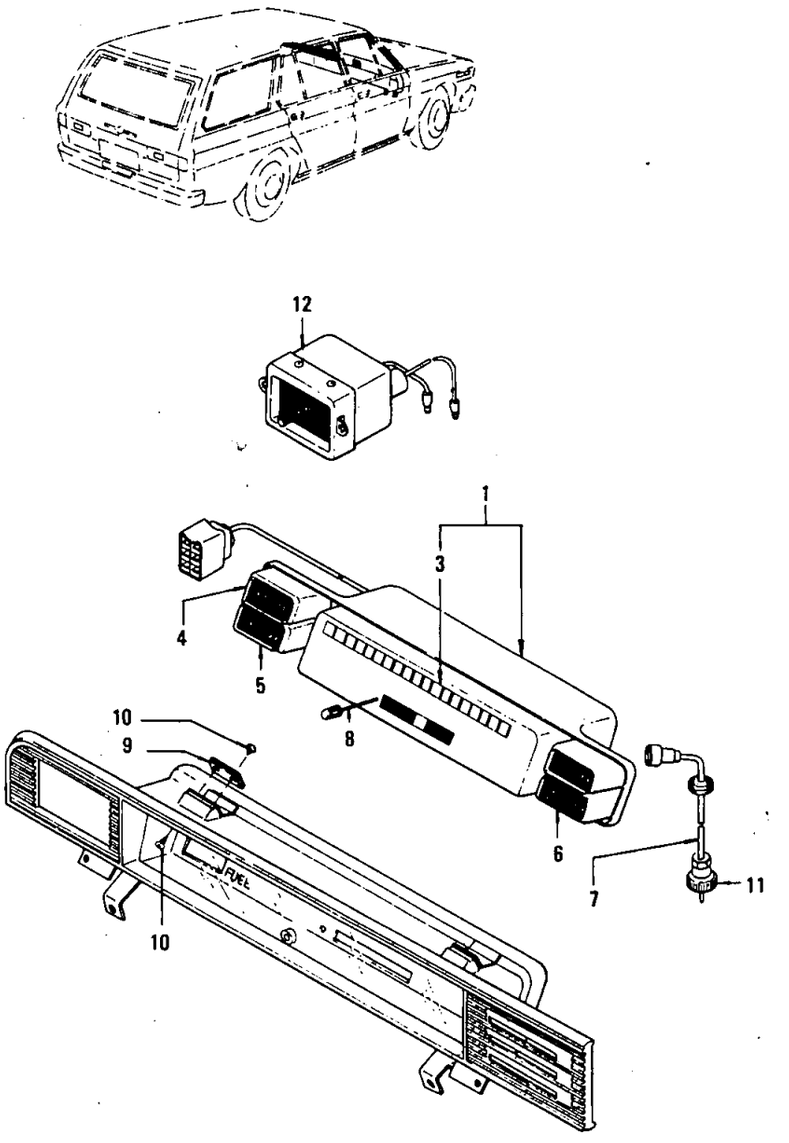

© 1972 NISSAN MOTOR CO., LTD.

PRINTED IN JAPAN

INSTRUMENT METER & CLOCK ('69 YEAR MODEL)

S	KEY NO.	PART NO.	DESCRIPTION	QTY	UNIT PKG FOR DIST.	APPLIED MODEL	APPLIED DATE FROM	APPLIED DATE UP TO	ICA N	ICA F	SUPERSEDED
	101	24810-E0105	COMBIND-INSTRUMENT 180 KM/H WITH TRIP PESET A TYPE	1	1	SUPER DELUXE WAGON R DRIVE		0969			
	02	24810-E0106	COMBIND-INSTRUMENT 120MILE/H WITH TRIP RESET A TYPE	1	1	SUPER-DELUXE WAGON R DRIVE		0969			
	03	24810-E0205	COMBIND-INSTRUMENT 180 KM/H WITH TRIP RESET B TYPE	1	1	PERSONAL VAN R DRIVE		0969			
	04	24810-E0206	COMBIND-INSTRUMENT 120MILE/H WITH TRIP RESET B TYPE	1	1	PERSONAL VAN R DRIVE		0969			
	05	24810-E0705	COMBIND-INSTRUMENT 180 KM/H TRIP RESET LESS B TYPE	1	1	STANDARD VAN R DRIVE		0969			
	06	24810-E0706	COMBIND-INSTRUMENT 120MILE/H TRIP RESET LESS B TYPE	1	1	STANDARD VAN R DRIVE		0969			
	07	24810-E1805	COMBIND-INSTRUMENT 180 KM/H WITH TRIP RESET A TYPE	1	1	SUPER DELUXE PERSONAL WAGON L DRIVE		0969			
	08	24810-E1806	COMBIND-INSTRUMENT 120MILE/H WITH TRIP RESET A TYPE	1	1	SUPER DELUXE PERSONAL WAGON L DRIVE		0969			
	09	24810-E1205	COMBIND-INSTRUMENT 180 KM/H WITH TRIP RESET B TYPE	1	1	PERSONAL VAN L DRIVE		0969			
	10	24810-E1207	COMBIND-INSTRUMENT 200 KM/H WITH TRIP RESET B TYPE	1	1	PERSONAL VAN L DRIVE EUROPE USE		0969			
	11	24810-E1807	COMBIND-INSTRUMENT 200 KM/H WITH TRIP RESET A TYPE	1	1	EUROPE USE EXC DIESEL L DRIVE		0969			
	12	24810-E1908	COMBIND-INSTRUMENT 180 KM/H TRIP RESET LESS B TYPE	1	1	DIESEL L DRIVE EUROPE USE		0969			
	13	24810-E1905	COMBIND-INSTRUMENT 180 KM/H TRIP RESET LESS B TYPE	1	1	STANDARD VAN L DRIVE		0969			
	14	24810-E1906	COMBIND-INSTRUMENT 120MILE/H TRIP RESET LESS B TYPE	1	1	STANDARD VAN L DRIVE		0969			
	15	24810-E1907	COMBIND-INSTRUMENT 200 KM/H TRIP RESET LESS B TYPE	1	1	VAN L DRIVE EUROPE USE		0969			

NOTE:

© 1972 NISSAN MOTOR CO., LTD.

INSTRUMENT METER & CLOCK ('69 YEAR MODEL)

S	KEY NO.	PART NO.	DESCRIPTION	QTY	UNIT PKG FOR DIST.	APPLIED MODEL	APPLIED DATE FROM	APPLIED DATE UP TO	ICA N	ICA F	SUPERSEDED
	201	- 24812-E0105	FINISHER WITH GRAIN	1		R DRIVE		0969			
	02	- 24812-E0205	FINISHER COAT WITH PAINT	1		R DRIVE		0969			
	03	- 24812-E1805	FINISHER WITH GRAIN	1		L DRIVE		0969			
	04	- 24812-E1205	FINISHER COAT WITH PAINT	1		L DRIVE		0969			
	301	- 24850-E0100	ASSY-SPEEDOMETER 180 KM/H WITH TRIP RESET	1	1	SUPER DELUXE PERSONAL WAGON		0969			
	02	- 24850-E0101	ASSY-SPEEDOMETER 120 MILE/H WITH TRIP RESET	1	1	SUPER DELUXE PERSONAL WAGON		0969			
	03	- 24850-E0300	ASSY-SPEEDOMETER 180 KM/H TRIP RESET LESS	1	1	STANDARD VAN		0969			
	04	- 24850-E0301	ASSY-SPEEDOMETR 120 MILE/H TRIP RESET LESS	1	1	STANDARD VAN		0969			
	05	- 24850-E1900	ASSY-SPEEDOMETER 180 KM/H TRIP RESET LESS	1	1	DIESEL L DRIVE EUROPE USE		0969			
	06	- 24850-E1202	ASSY-SPEEDOMETER 200 KM/H WITH TRIP RESET	1	1	EUROPE EXC DIESEL VAN		0969			
	07	- 24850-E1302	ASSY-SPEEDOMETER 200 KM/H TRIP RESET LESS	1	1	VAN L DRIVE EUROPE USE		0969			
	401	- 24845-E0100	ASSY-AMMETER	1	1	ALL		0969			
	501	- 24880-E0100	ASSY-GAUGE TEMPERATURE	1	1	ALL		0969			
	601	- 24860-E0100	ASSY-GAUGE FUEL	1	1	ALL		0969			
	701	- 25050-78100	ASSY-SHAFT FLEXIBLE	1	1	R DRIVE		0969			
	02	- 25050-77900	ASSY-SHAFT FLEXIBLE	1	1	L DRIVE		0969			
	801	- 24854-21600	KNOB-TRIP RESET	1	10	ALL		0969			
	901	- 00918-31010	NUT-SPRING	2	50	ALL		0969			
	1001	- 00511-01642	SCREW-TAPPING	4	50	ALL		0969			

NOTE:

© 1972 NISSAN MOTOR CO., LTD.

PRINTED IN JAPAN

INSTRUMENT METER & CLOCK ('69 YEAR MODEL)

S	KEY NO.	PART NO.	DESCRIPTION	QTY	UNIT PKG FOR DIST.	APPLIED MODEL	APPLIED DATE FROM	APPLIED DATE UP TO	ICA N	ICA F	SUPERSEDED
	1101	- 25251-30100	NUT-GROUND ENGINE UNIT	1	10	ALL EXC STANDARD		0969			
	02	- 25251-37700	NUT-GROUND ENGINE UNIT	1	10	STANDARD		0969			
	1201	- 27380-E0100	ASSY-CLOCK (JECO)	1	1	ALL		0969			
	02	- 27380-E0105	ASSY-CLOCK(CITIZEN)	1	1	ALL		0969			
	1301	- 00915-11010	WASHER-SPRING #10	2	50	ALL		0969			
	1401	- 00911-14010	NUT-HEXAGON	2	50	ALL		0969			

NOTE:

© 1972 NISSAN MOTOR CO., LTD.

REVISED: DECEMBER, 1972

PRINTED IN JAPAN

NOTE

Printed in Japan

NISSAN MOTOR CO., LTD.

INSTRUMENT METER & CLOCK (R DRIVE '70 YEAR MODEL)

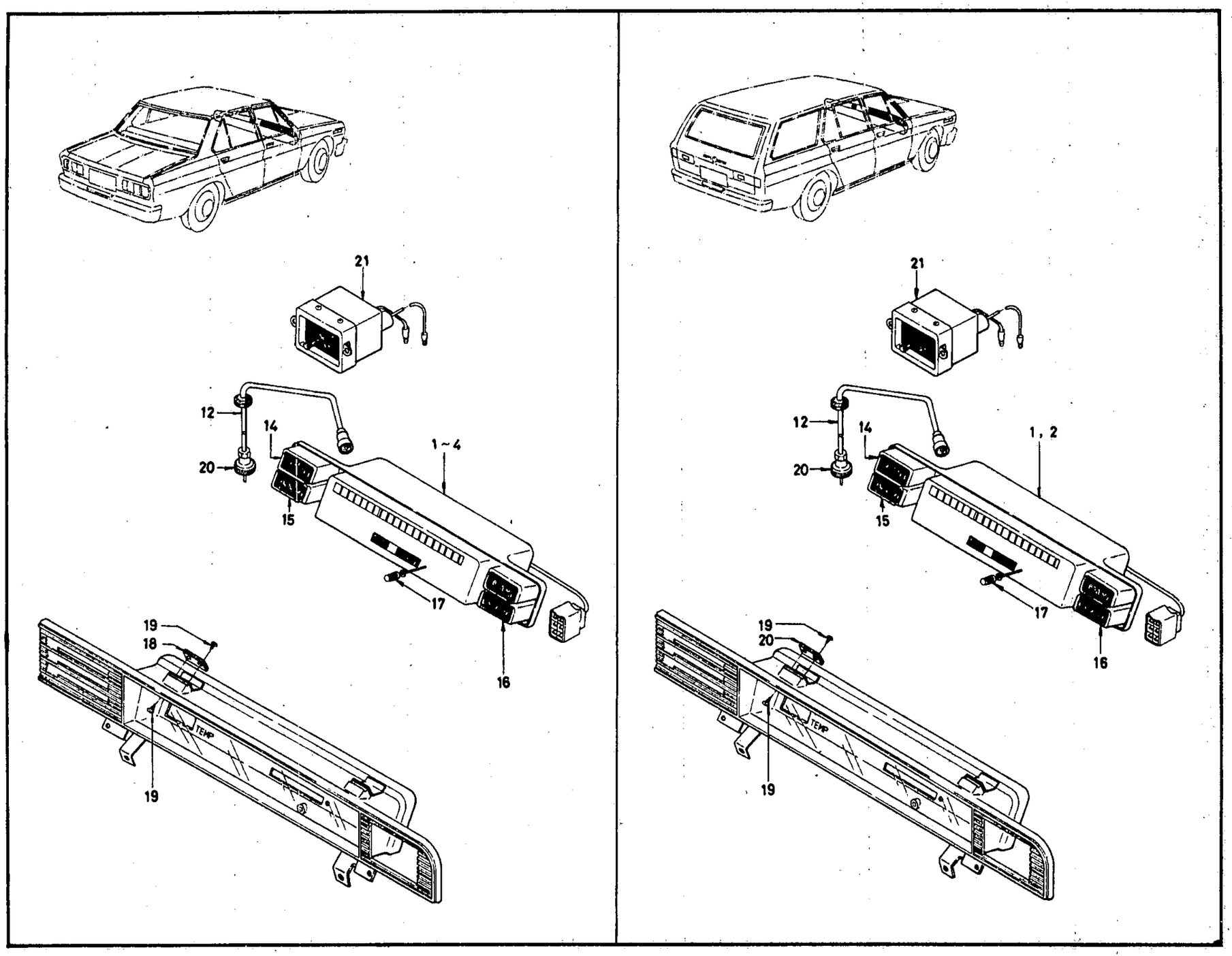

ILLUSTRATION **143A-1**

© 1972 NISSAN MOTOR CO., LTD.

REVISED: DECEMBER, 1972

PRINTED IN JAPAN

INSTRUMENT METER & CLOCK (L DRIVE '70 YEAR MODEL)

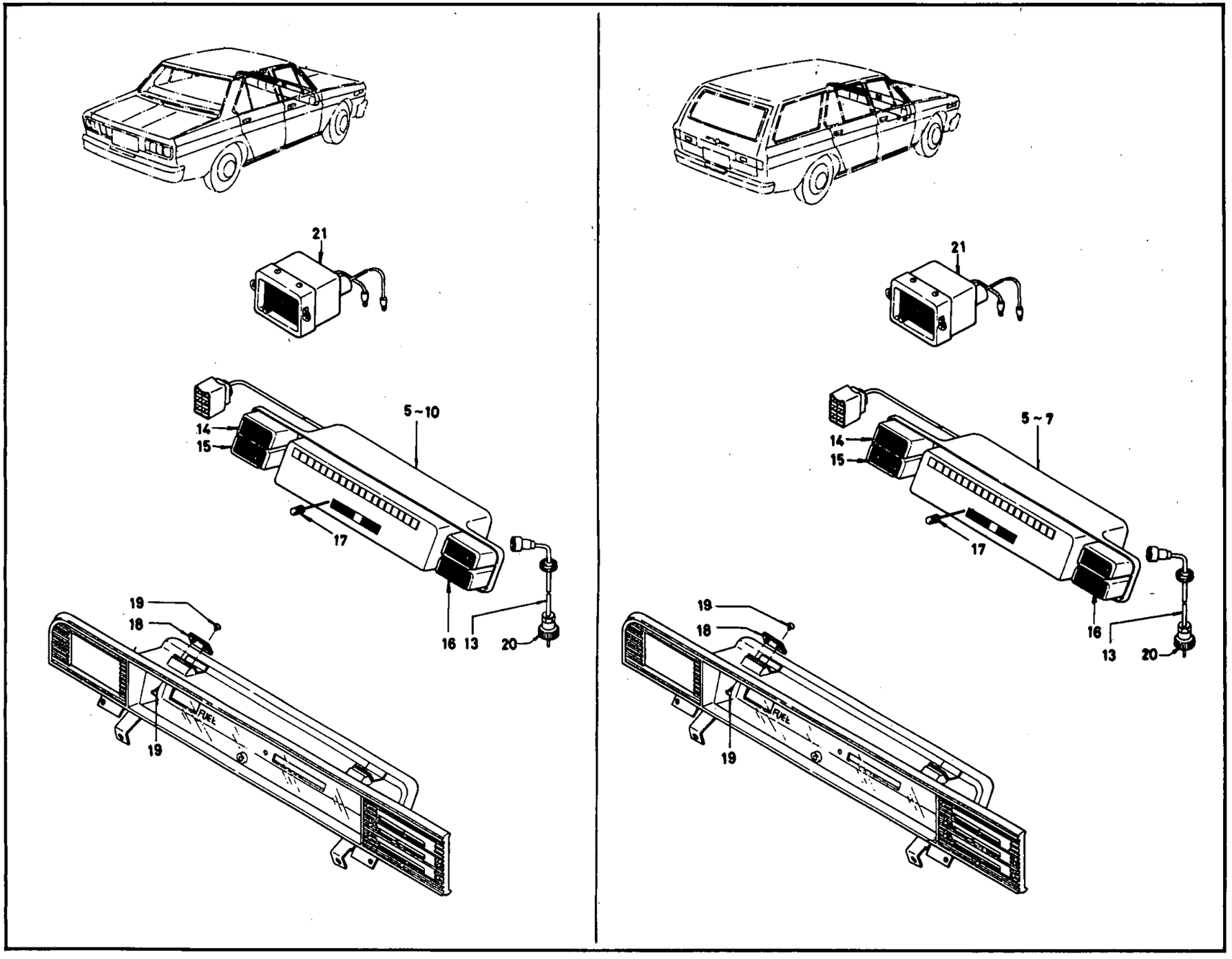

© 1972 NISSAN MOTOR CO., LTD.

PRINTED IN JAPAN

INSTRUMENT METER & CLOCK ('70 YEAR MODEL)

S	KEY NO.	PART NO.	DESCRIPTION	QTY	UNIT PKG FOR DIST.	APPLIED MODEL	APPLIED DATE FROM	APPLIED DATE UP TO	ICA N	ICA F	SUPERSEDED
	101	- 24810-E0105	COMBIND-INSTRUMENT 180KM F/W WITH TRIP	1	1	R DRIVE EXC STANDARD DIESEL	1069				
	201	- 24810-E0106	COMBIND-INSTRUMENT 120 MILE F/W WITH TRIP	1	1	R DRIVE EXC STANDARD DIESEL	1069				
	02	- 27380-E0105	ASSY-CLOCK(CITIZEN)	1	1	ALL	1069				
	301	- 24810-E0705	COMBIND-INSTRUMENT 180KM F/P TRIP LESS	1	1	STANDARD DIESEL R DRIVE	1069				
	401	- 24810-E0706	COMBIND-INSTRUMENT 120 MILE F/P TRIP	1	1	STANDARD DIESEL R DRIVE	1069				
	501	- 24810-E1805	COMBIND-INSTRUMENT 180KM F/W WITH TRIP	1	1	L DRIVE EXC STANDARD DIESEL	1069				
	601	- 24810-E1806	COMBIND-INSTRUMENT 120MILE F/W WITH TRIP	1	1	L DRIVE EXC STANDARD DIESEL	1069				
	701	- 24810-E1807	COMBIND-INSTRUMENT 200KM F/W WITH TRIP	1	1	OP L DRIVE EXC STANDARD DIESEL	1069				
	02	- 24810-E1907	COMBIND-INSTRUMENT 200KM F/P TRIP LESS	1	1	OP STANDARD L DRIVE	1069				
	801	- 24810-E1908	COMBIND-INSTRUMENT 180KM F/P TRIP LESS	1	1	OP DIESEL L DRIVE	1069				
	901	- 24810-E1905	COMBIND-INSTRUMENT 180KM F/P TRIP LESS	1	1	STANDARD DIESEL L DRIVE	1069				
	1001	- 24810-E1906	COMBIND-INSTRUMENT 120MILE F/P TRIP LESS	1	1	STANDARD DIESEL L DRIVE	1069				
	1101	- 25080-89900	GAUGE-TEMPERATURE ENGINE UNIT	1	5	ALL	1069				
	1201	- 25050-E3200	ASSY-SHAFT FLEXIBLE	1	1	R DRIVE	1069				
	1301	- 25050-77900	ASSY-SHAFT FLEXIBLE	1	1	L DRIVE	1069				
	1401	- 24845-E0100	ASSY-AMMETER	1	1	ALL	1069				
	1501	- 24880-E0100	ASSY-GAUGE TEMPERATURE	1	1	ALL	1069				

NOTE:

© 1972 NISSAN MOTOR CO., LTD.

REVISED: DECEMBER, 1972

PRINTED IN JAPAN

INSTRUMENT METER & CLOCK ('70 YEAR MODEL)

S	KEY NO.	PART NO.	DESCRIPTION	QTY	UNIT PKG FOR DIST.	APPLIED MODEL	APPLIED DATE FROM	APPLIED DATE UP TO	ICA N	ICA F	SUPERSEDED
	1601	24860-E0100	ASSY-GAUGE FUEL	1	1	ALL	1069				
	1701	24854-21600	KNOB-TRIP RESET	1	10	ALL	1069				
	1801	00918-31010	NUT-SPRING	2	50	ALL	1069				
	1901	00511-01642	SCREW-TAPPING	4	50	ALL	1069				
	2001	25251-30100	NUT-GROUND ENGINE UNIT	1	10	ALL EXC STANDARD	1069				
	02	25251-37700	NUT-GROUND ENGINE UNIT	1	10	STANDARD	1069				
	2101	27380-E0100	ASSY-CLOCK(JECO)	1	1	ALL	1069				
	02	27380-E0105	ASSY-CLOCK(CITIZEN)	1	1	ALL	1069				
	2201	00915-11010	WASHER-SPRING #10	2	50	ALL	1069				
	2301	00911-14010	NUT-HEXAGON	2	50	ALL	1069				

NOTE:

© 1972 NISSAN MOTOR CO., LTD.

PRINTED IN JAPAN

NOTE

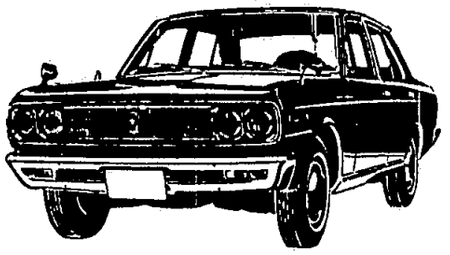

NISSAN MOTOR CO., LTD.

Printed in Japan

NOTE

Printed in Japan

NISSAN MOTOR CO., LTD.

ROOM HEATER (L24, L20(A) & L23)

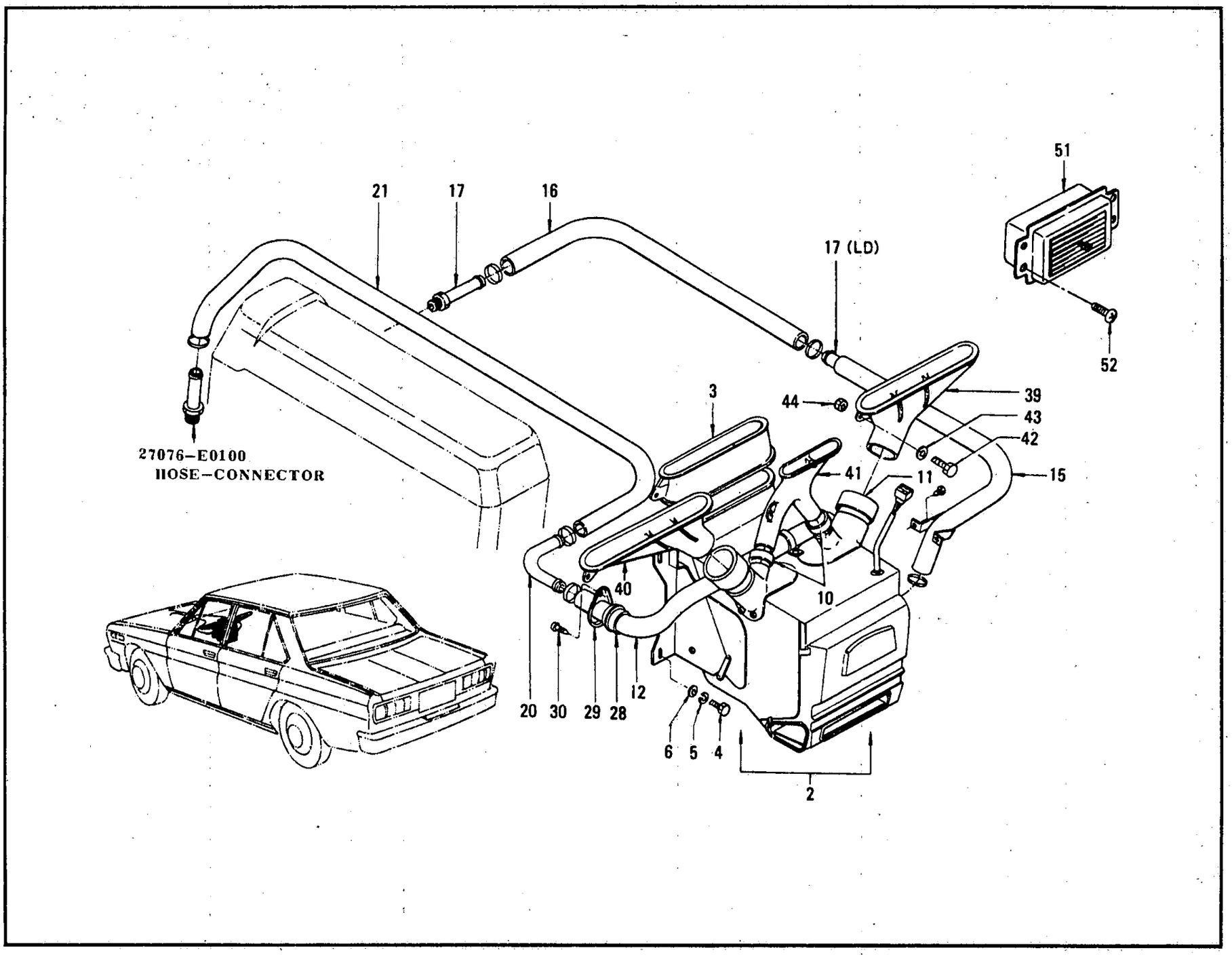

ILLUSTRATION **144**

© 1972 NISSAN MOTOR CO., LTD.

REVISED: DECEMBER, 1972

PRINTED IN JAPAN

ROOM HEATER [L24, L20(A) & L23]

S	KEY NO.	PART NO.	DESCRIPTION	QTY	UNIT PKG FOR DIST.	APPLIED MODEL	APPLIED DATE FROM	APPLIED DATE UP TO	ICA N	ICA F	SUPERSEDED
	101	27010-E0600	KIT-CAR HEATER FRONT	1	1	OP L23 R DRIVE		0969			
	02	27010-E3000	KIT-CAR HEATER FRONT	1	1	OP L24 & L20A RD	1069				
	03	27010-E1800	KIT-CAR HEATER FRONT	1	1	OP L23 L DRIVE		0969			
	04	27010-E3300	KIT-CAR HEATER FRONT	1	1	OP L24 & L20A LD					
	201	27011-E0101	UNIT-CAR HEATER FRONT	1	1	OP L24 L23 & L20A					
	301	27012-E0101	DUCT-AIR INTAKE	1		OP L24 L23 & L20A					
	401	00114-52010	BOLT	4	50	OP L24 L23 & L20A					
	501	00915-11510	WASHER-SPRING	4	50	OP L24 L23 & L20A					
	601	00915-41510	WASHER-PLAIN	4	50	OP L24 L23 & L20A					
	701	00414-01610	SCREW-MACHINE	2	50	OP L24 L23 & L20A					
	801	00915-41010	WASHER-PLAIN	2	50	OP L24 L23 & L20A					
	901	00915-11010	WASHER-SPRING	2	50	OP L24 L23 & L20A					
	1001	27161-E0100	HOSE-DEMISTER A	2	5	OP L24 L23 & L20A					
	1101	27162-E0100	HOSE-DEMISTER B	2	5	OP L24 L23 & L20A					
	1201	27022-E0101	HOSE-WATER	1	5	OP L24 L23 & L20A R DRIVE			Y	N	27022-E0100
	02	27022-E1801	HOSE-WATER	1	5	OP L24 L23 & L20A L DRIVE			Y	N	27022-E1800
	1301	27016-E0100	COVER-HEATER SIDE	1	1	OP L24 L23 & L20A					
	1401	27061-E0100	COCK-HEATER	1	1	OP L23		0969			
	02	27061-E3000	COCK-HEATER	1	1	OP L24 L20A	1069		N	N	27061-E0100
	1501	27050-89930	HOSE-WATER	1	5	OP L24 L23 & L20A			Y	N	27040-89930
	1601	27025-E0102	HOSE-WATER	1	1	OP L23 R DRIVE		0969	Y	N	27025-E0101
	02	27025-E3201	HOSE-WATER	0	5	OP L24 L20A RD	1069		N	N	27025-E0102

NOTE:

© 1972 NISSAN MOTOR CO., LTD.

PRINTED IN JAPAN

ROOM HEATER (L24, L20(A) & L23)

S	KEY NO.	PART NO.	DESCRIPTION	QTY	UNIT PKG FOR DIST.	APPLIED MODEL	APPLIED DATE FROM	APPLIED DATE UP TO	ICA N	ICA F	SUPERSEDED
	1603	27025-E1802	HOSE-WATER	1	1	OP L23 L DRIVE		0969			
	04	27025-E3300	HOSE-WATER	1	5	OP L20 L20A LD	1069		N	N	27025-E1802
	1701	27060-E1800	CONNECTOR-HEATER	1	1	OP L24 L23 & L20A L DRIVE					
	02	27060-E0600	CONNECTOR-HEATER	1	1	OP L24 L23 & L20A R DRIVE					
	1801	27063-E0102	BRACKET-HEATER CONNECTOR	1	1	OP L24 L23 & L20A R DRIVE			Y	N	27063-E1800
	02	27063-E1801	BRACKET-HEATER CONNECTOR	1		OP L24 L23 & L20A L DRIVE			Y	N	27063-E1800
	1901	00314-01014	SCREW-MACHINE WITH WASHER	2	50	OP L24 L23 & L20A					
	2001	27065-E0601	CONNECTOR-HEATER	1	5	OP L24 L23 & L20A					
	2101	27026-E0102	HOSE-WATER OUTLET	1	1	OP L23 R DRIVE		0969	Y	N	27026-E0101
	02	27026-E3001	HOSE-WATER OUTLET	1	5	OP L24 L20A RD	1069		N	N	27026-E0102
	03	27026-E1801	HOSE-WATER OUTLET	1	1	OP L23 L DRIVE		0969			
	04	27026-E3300	HOSE-WATER OUTLET	1	1	OP L24 L20A LD	1069		N	N	27026-E1801
	2201	27037-73400	CLIP-WATER HOSE	2	5	OP L24 L23 & L20A					
	2301	00911-14410	NUT	2	50	OP L24 L23 & L20A R DRIVE					
	2401	00915-11410	WASHER-SPRING	2	50	OP L24 L23 & L20A R DRIVE					
	2501	00915-41410	WASHER-PLAIN	2	50	OP L24 L23 & L20A R DRIVE					
	2601	27050-E0100	CLIP-WATER	4	5	OP L24 L23 & L20A					
	2701	27051-E0100	CLIP-WATER	4	5	OP L24 L23 & L20A					
	2801	27035-73000	GROMMET	2	10	OP L24 L23 & L20A					

NOTE:

© 1972 NISSAN MOTOR CO., LTD.

REVISED: DECEMBER, 1972
PRINTED IN JAPAN

ROOM HEATER (L24, L20(A) & L23)

S	KEY NO.	PART NO.	DESCRIPTION	QTY	UNIT PKG FOR DIST.	APPLIED MODEL	APPLIED DATE FROM	APPLIED DATE UP TO	ICA N	ICA F	SUPERSEDED
	2901	27051-73000	COVER-GROMMET	2	5	OP L24 L23 & L20A					
	3001	00514-01610	SCREW TAPPING	2	50	OP L24 L23 & L20A					
	3101	27043-E0600	CLAMP-WATER HOSE	1	5	OP L24 L23 & L20A					
	3201	00314-01210	SCREW-MACHINE	1	50	OP L24 L23 & L20A					
	3301	00915-11010	WASHER-SPRING	1	50	OP L24 L23 & L20A					
	3401	00915-41010	WASHER-PLAIN	1	50	OP L24 L23 & L20A					
	3501	27130-78105	ASSY-AUTO COCK	1	1	OP L24 L23 & L20A					
	3601	27020-E0105	HOSE-WATER	1	5	OP L24 L23 & L20A			Y	N	27020-78105
	3701	27021-E0105	HOSE-WATER	1	5	OP L24 L23 & L20A			Y	N	27021-78105
	3801	08723-12200	CLAMP	2	10	OP L24 L23 & L20A					
	3901	27171-E0101	NOZZLE-DEMISTER RH	1	1	OP L24 L23 & L20A			Y	N	27171-E0100
	4001	27172-E0101	NOZZLE-DEMISTER LH	1	1	OP L24 L23 & L20A			Y	N	27172-E0100
	4101	27175-E0100	NOZZLE-DEMISTER CENTER	1	1	OP L24 L23 & L20A					
	4201	00511-01310	SCREW-TAPPING	6	50	OP L24 L23 & L20A					
	4301	00915-41010	WASHER-PLAIN	6	50	OP L24 L23 & L20A					
	4401	00918-41000	NUT-SPRING	6	50	OP L24 L23 & L20A					
	4501	68710-E0101	ASSY-HEATER CONTROL	1	1	OP L24 L23 & L20A					
	02	68710-E0101	ASSY-HEATER CONTROL	1	1	OP L24 L23 & L20A					
	4601	68725-E0101	KNOB-HEATER CONTOROL A	2	5	OP L24 L23 & L20A					
	4701	68726-E0101	KNOB-HEAER CONTROL B	1	5	OP L24 L23 & L20A					
	4801	00314-01014	SCREW-MACHIN WITH SPRING WASHER	4	50	OP L24 L23 & L20A					
	4901	00521-01642	SCREW-TAPPING	2	50	OP L24 L23 & L20A					

NOTE:

© 1972 NISSAN MOTOR CO., LTD.

PRINTED IN JAPAN

ROOM HEATER (L24, L20(A) & L23)

S	KEY NO.	PART NO.	DESCRIPTION	QTY	UNIT PKG FOR DIST.	APPLIED MODEL	APPLIED DATE FROM	APPLIED DATE UP TO	ICA N	ICA F	SUPERSEDED
	5001	68880-89902	NUT-EXPANSION	2	10	OP L24 L23 & L20A					
	5101	68750-E0100	ASSY-SIDE VENTILATOR	2	1	OP L24 L23 & L20A					
	5201	00514-01010	SCREW-TAPPING	4	50	OP L24 L23 & L20A					
	5301	27131-E0100	ASSY-CABLE HEATER CONTROL	1	5	OP L24 L23 & L20A					
	02	27131-E0101	ASSY-CABLE HEATER CONTROL	1	5	OP L24 L23 & L20A					
	03	27131-E1200	ASSY-CABLE HEATER CONTROL	1	5	OP L24 L23 & L20A L DRIVE					
	04	27131-E1201	ASSY-CABLE HEATER	1	5	OP L24 L23 & L20A L DRIVE					

NOTE:

© 1972 NISSAN MOTOR CO., LTD.

REVISED: DECEMBER, 1972
PRINTED IN JAPAN

NOTE

Printed in Japan

NISSAN MOTOR CO., LTD.

ROOM HEATER (J20)

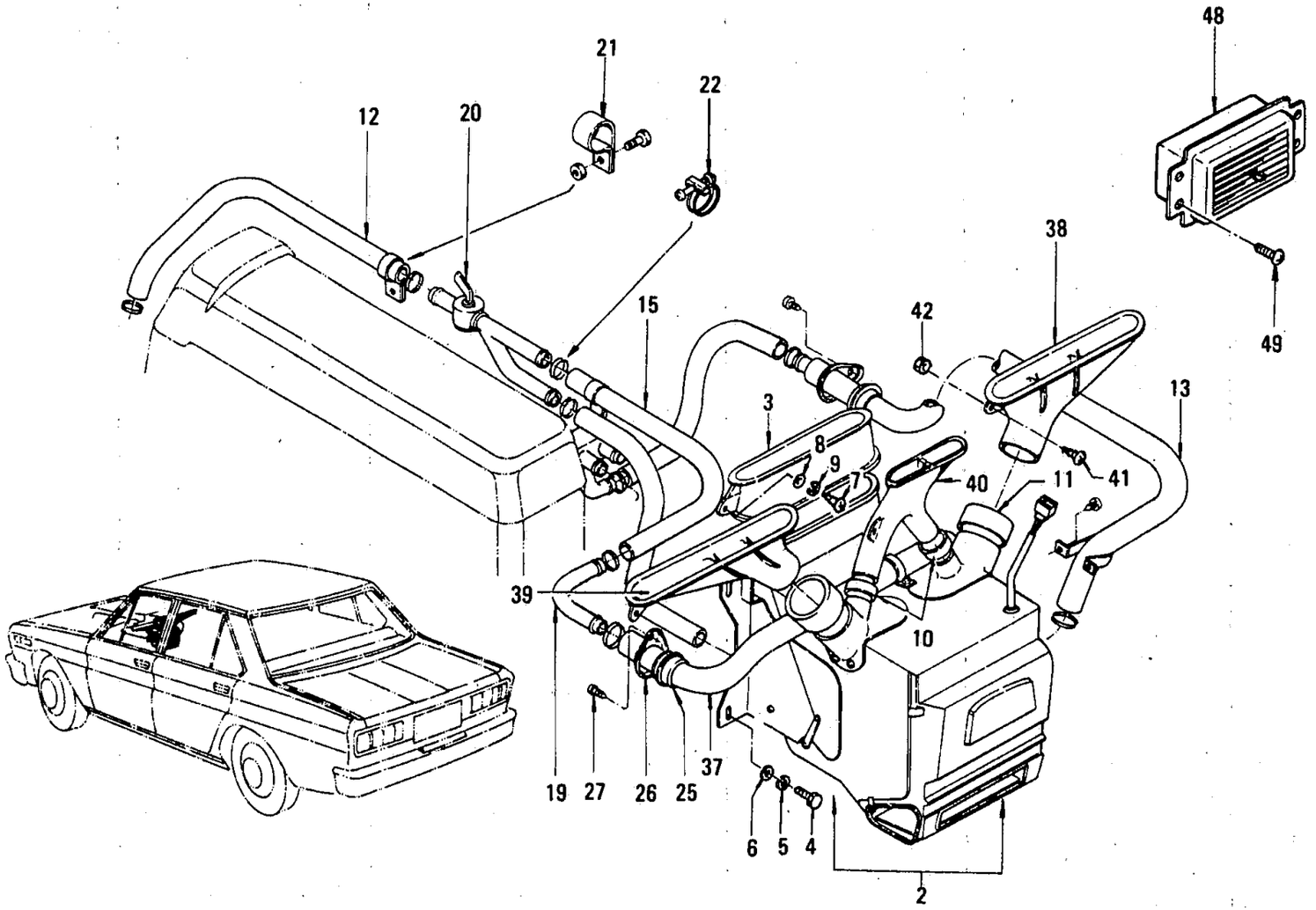

© 1972 NISSAN MOTOR CO., LTD.

REVISED: DECEMBER, 1972

PRINTED IN JAPAN

ROOM HEATER (J20)

S	KEY NO.	PART NO.	DESCRIPTION	QTY	UNIT PKG FOR DIST.	APPLIED MODEL	APPLIED DATE FROM	APPLIED DATE UP TO	ICA N	ICA F	SUPERSEDED
	101	27010-E0200	KIT-CAR HEATER FRONT	1	1	OP J20 R DRIVE		0969			
	02	27010-E1200	KIT-CAR HEATER FRONT	1	1	OP J20 L DRIVE		0969			
	201	27011-E0101	UNIT-CAR HEATER FRONT	1	1	OP J20		0969			
	301	27012-E0101	DUCT-AIR INTAKE	1		OP J20		0969			
	401	00114-52010	BOLT	4	50	OP J20		0969			
	501	00915-11510	WASHER-SPRING	4	50	OP J20		0969			
	601	00915-41510	WASHER-PLAIN	4	50	OP J20		0969			
	701	00414-01610	SCREW-MACHINE	2	50	OP J20		0969			
	801	00915-41010	WASHER-PLAIN	2	50	OP J20		0969			
	901	00915-11010	WASHER-SPRING	2	50	OP J20		0969			
	1001	27161-E0100	HOSE-DEMISTER A	2	5	OP J20		0969			
	1101	27162-E0100	HOSE-DEMISTER B	2	5	OP J20		0969			
	1201	27050-89930	HOSE-WATER	1	5			0969	Y	Y	27040-89930
	1301	27022-E0101	HOSE-WATER	1	5	OP J20 R DRIVE		0969	Y	Y	27022-78105
	02	27022-E1801	HOSE-WATER	1	5	OP J20 L DRIVE		0969			
	1401	27016-E0100	COVER-HEATER SIDE	1	1	OP J20		0969			
	1501	27023-E0201	HOSE-WATER	1	1	OP J20		0969	Y	Y	27023-E0200
	1601	27050-89970	HOSE-WATER	1	5	OP J20		0969	Y	Y	27040-89970
	1701	27050-89960	HOSE-WATER	1	5	OP J20		0969	Y	Y	27040-89960
	1801	27070-66000	CONNCTOR	1		OP J20		0969			
	1901	27063-73000	CONNECTOR-ELBOW	1	5	OP J20		0969			
	2001	27068-72600	CONNECTOR-STRAIGHT	1	5	OP J20		0969			
	2101	27051-E0100	CLIP-HOSE	4	5	OP J20		0969			

NOTE:

PRINTED IN JAPAN

REVISED: DECEMBER, 1972

© 1972 NISSAN MOTOR CO., LTD.

ROOM HEATER (J20)

S	KEY NO.	PART NO.	DESCRIPTION	QTY	UNIT PKG FOR DIST.	APPLIED MODEL	APPLIED DATE FROM	APPLIED DATE UP TO	ICA N	ICA F	SUPERSEDED
	2201	- 27041-73000	CLAMP-HOSE	4	5	OP J20		0969			
	2301	- 00114-41610	BOLT	3	50	OP J20		0969			
	2401	- 00915-11410	WASHER-SPRING	3	50	OP J20		0969			
	2501	- 27035-73000	GROMMET-RUBBER	2	10	OP J20		0969			
	2601	- 27051-73000	COVER-GROMMET	2	5	OP J20		0969			
	2701	- 00514-01610	SCREW-TAPPING	2	50	OP J20		0969			
	2801	- 27041-73000	CLAMP-HOSE	1	5	OP J20		0969			
	2901	- 00314-01210	SCREW	1	50	OP J20		0969			
	3001	- 00915-11010	WASHER-SPRING	1	50	OP J20		0969			
	3101	- 00915-41010	WASHER-PLAIN	1	50	OP J20		0969			
	3201	- 27022-E1801	HOSE-WATER	1	5	OP J20		0969	Y	Y	27022-E1800
	3301	- 27130-78105	ASSY AUTO COCK	1	1	OP J20		0969			
	3401	- 27020-E0105	HOSE-WATER	1	5	OP J20		0969	Y	Y	27022-E0105
	3501	- 27021-E0105	HOSE-WATER	1	5	OP J20		0969	Y	Y	27021-78105
	3601	- 00721-12200	CLAMP	2	10	OP J20		0969			
	3701	- 27022-78105	HOSE-WATER	1	5	OP J20		0969			
	3801	- 27171-E0101	NOZZLE-DEMISTER RH	1	1	J20		0969	Y	Y	27171-E0100
	3901	- 27172-E0101	NOZZLE-DEMISTER LH	1	1	J20		0969	Y	Y	27172-E0100
	4001	- 27175-E0100	NOZZLE-DEMISTER CENTER	1	1	J20		0969			
	4101	- 00511-01310	TAPPING SCREW	6	50	J20		0969			
	4201	- 00918-41000	SPRING-NUT TYPE B	6	50	J20		0969			
	4301	- 68710-E0101	ASSY-HEATER CONTROL	1	1	OP J20		0969			
	4401	- 68726-E0101	KNOB-HEATER CONTROL B	1	5	OP J20		0969			

NOTE:

© 1972 NISSAN MOTOR CO., LTD.

REVISED: DECEMBER, 1972

PRINTED IN JAPAN

ROOM HEATER (J20)

S	KEY NO.	PART NO.	DESCRIPTION	QTY	UNIT PKG FOR DIST.	APPLIED MODEL	APPLIED DATE FROM	APPLIED DATE UP TO	ICA N	ICA F	SUPERSEDED
	4501	00314-01014	SCREW WITH SPRING WASHER	4		OP J20		0969			
	4601	00521-01642	SCREW TAPPING	2		OP J20		0969			
	4701	68880-89902	NUT EXPANSION	2	10	OP J20		0969			
	4801	68750-E0100	ASSY-SIDE VENTILATOR	2	1	J20		0969			
	4901	00514-01010	SCREW-TAPPING TYPE 2	4	50	J20		0969			
	5001	27131-E0100	ASSY-CABLE HEATER CONTROL	1	5	OP J20 R DRIVE		0969			
	02	27131-E0101	ASSY-CABLE HEATER CONTROL	1	5	OP J20 R DRIVE		0969			
	03	27131-E1200	ASSY-CABLE HEATER CONTROL	1	5	OP J20 L DRIVE		0969			
	04	27131-E1201	ASSY-CABLE HEATER CONTROL	1	5	OP J20 L DRIVE		0969			

NOTE:

© 1972 NISSAN MOTOR CO., LTD.

PRINTED IN JAPAN

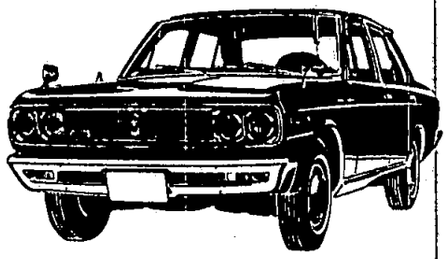

NOTE

NISSAN MOTOR CO., LTD.

Printed in Japan

NOTE

Printed in Japan

NISSAN MOTOR CO., LTD.

ROOM HEATER (H20)

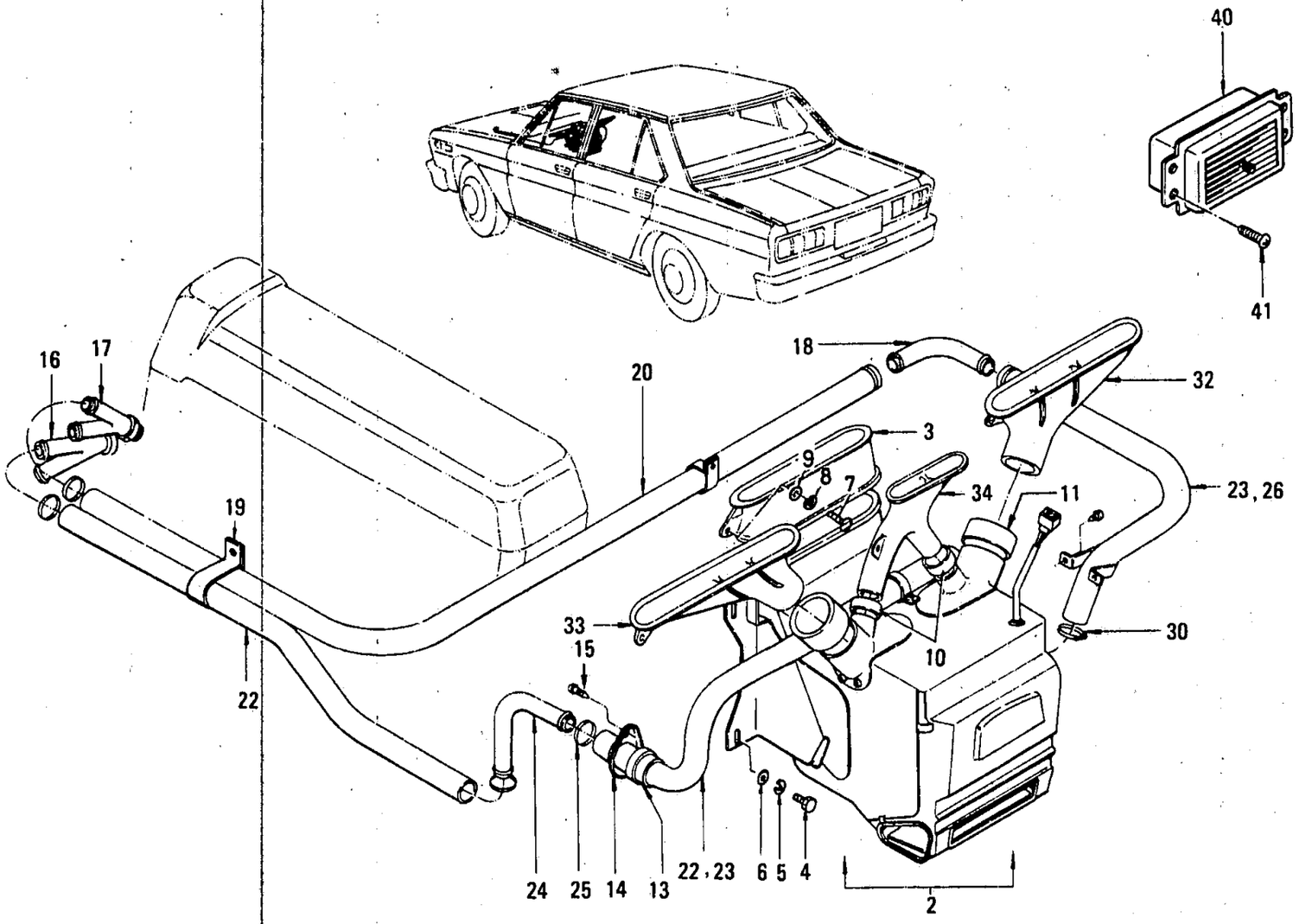

ILLUSTRATION **144 B**

© 1972 NISSAN MOTOR CO., LTD.

REVISED: DECEMBER, 1972

PRINTED IN JAPAN

NISSAN

ROOM HEATER (H20)

S	KEY NO.	PART NO.	DESCRIPTION	Q'TY	UNIT PKG FOR DIST.	APPLIED MODEL	APPLIED DATE FROM	APPLIED DATE UP TO	ICA N	ICA F	SUPERSEDED
	1D1	27010-E0700	KIT-CAR HEATER FRONT	1	1	Op H20 R DRIVE					
	D2	27010-E1300	KIT-CAR HEATER FRONT	1	1	Op H20 L DRIVE					
	2D1	27011-E0101	UNIT-CAR HEATER FRONT	1	1	Op H20					
	3D1	27012-E0101	DUCT-AIR INTAKE	1		Op H20					
	4D1	00114-52010	BOLT	4	50	Op H20					
	5D1	00915-11510	WASHER-SPRING	4	50	Op H20					
	6D1	00915-41510	WASHER-PLAIN	4	50	Op H20					
	7D1	00414-01610	SCREW-MACHINE	2	50	Op H20					
	8D1	00915-41010	WASHER-PLAIN	2	50	Op H20					
	9D1	00915-11010	WASHER-SPRING	2	50	Op H20					
	10D1	27161-E0100	HOSE-DEMISTER A	2	5	Op H20					
	11D1	27162-E0100	HOSE-DEMISTER B	2	5	Op H20					
	12D1	27016-E0100	COVER-HEATER SIDE	1	1	Op H20					
	13D1	27035-73000	GROMMET	2	10	Op H20					
	14D1	27051-73000	COVER-GROMMET	2	5	Op H20					
	15D1	00514-01610	SCREW-TAPPING	2	50	Op H20					
	16D1	27076-32600	CONNECTOR-BEND	1	1	Op H20					
	17D1	27070-66000	CONNECTOR-STRAIGHT	1	5	Op H20					
	18D1	27063-73000	CONNECTOR-ELBOW	1	5	Op H20					
	19D1	27069-73600	CLIP-HOSE	1	1	Op H20					
*	20D1	27041-89910	HOSE-WATER	1	5	Op H20					
	D2	27051-89910	HOSE-WATER	1	1	Op H20			Y	N	27041-89910
	21D1	27050-89930	HOSE-WATER	1	5	Op H20			Y	N	27040-89930

NOTE:

© 1972 NISSAN MOTOR CO., LTD.

PRINTED IN JAPAN

ROOM HEATER (H20)

S	KEY NO.	PART NO.	DESCRIPTION	Q'TY	UNIT PKG FOR DIST.	APPLIED MODEL	APPLIED DATE FROM	APPLIED DATE UP TO	ICA N	ICA F	SUPERSEDED
	2701	27050-89970	HOSE-WATER	1	5	Up H20			Y	N	27040-89970
	2301	27022-E0101	HOSE-WATER	1	5	Up H20 R DRIVE			Y	N	27022-E0100
	2401	27068-72600	CONNECTOR-WATER HOSE	1	5	Up H20					
	2501	27051-E0100	CLIP	4	5	Up H20					
	2601	27022-E1801	HOSE-WATER	1	5	Up H20 L DRIVE			Y	N	27022-E1800
	2701	27130-78105	ASSY-AUTOMATIC COCK	1	1	Up H20					
	2801	27020-78105	HOSE-WATER	1	5	Up H20					
	02	27020-E0105	HOSE-WATER	1	5	Up H20			Y	N	27020-78105
	2901	27021-78105	HOSE-WATER	1		Up H20 R DRIVE					
	02	27021-E0105	HOSE-WATER	1	5	Up H20 R DRIVE			Y	N	27021-78105
	3001	00721-12200	CLAMP	2	10	Up H20					
	3101	27022-78105	HOSE-WATER	1	5	Up H20 L DRIVE					
	3201	27171-E0101	NOZZLE-DEMISTER RH	1	1	H20			Y	N	27171-E0100
	3301	27172-E0101	NOZZLE-DEMISTER LH	1	1	H20			Y	N	27172-E0100
	3401	27175-E0100	NOZZLE-DEMISTER CENTER	6	1	H20					
	3501	00511-01310	SCREW-TAPPING	6	50	H20					
	3601	00918-41000	NUT-SPRING TYPE B	6	50	H20					
	3701	68710-E0101	ASSY-HEATER CONTROL	1	1	Up H20					
	3801	68726-E0101	KNOB-HEATER CONTROL B	1	5	Up H20					
	3901	00314-01014	SCREW	4	50	Up H20					
	4001	68750-E0100	ASSY-SIDE VENTILATOR	2	1	H20					
	4101	00514-01010	SCREW-TAPPING TYPE2	4	50	H20					
	4201	27131-E0100	ASSY-CABLE HEATER	1	5	Up H20 R DRIVE					

NOTE:

© 1972 NISSAN MOTOR CO., LTD.

REVISED: DECEMBER, 1972

PRINTED IN JAPAN

C

ROOM HEATER (H20)

S	KEY NO.	PART NO.	DESCRIPTION	Q'TY	UNIT PKG FOR DIST.	APPLIED MODEL	APPLIED DATE FROM	APPLIED DATE UP TO	ICA N	ICA F	SUPERSEDED
	4202	27131-E0101	ASSY-CABLE HEATER CONTROL	1	5	OP H20 R DRIVE					
	03	27131-E1200	ASSY-CABLE HEATER CONTROL	1	5	OP H20 L DRIVE					
	04	27131-E1201	ASSY-CABLE HEATER CONTROL	1	5	OP H20 LD					

NOTE:

© 1972 NISSAN MOTOR CO., LTD.

PRINTED IN JAPAN

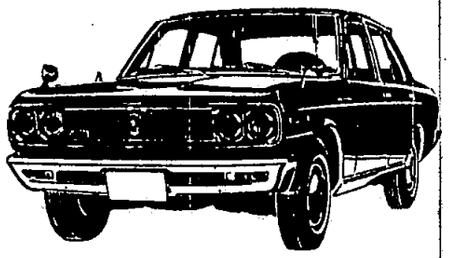

NOTE

NOTE

Printed in Japan

NISSAN MOTOR CO., LTD.

ROOM HEATER (SD22)

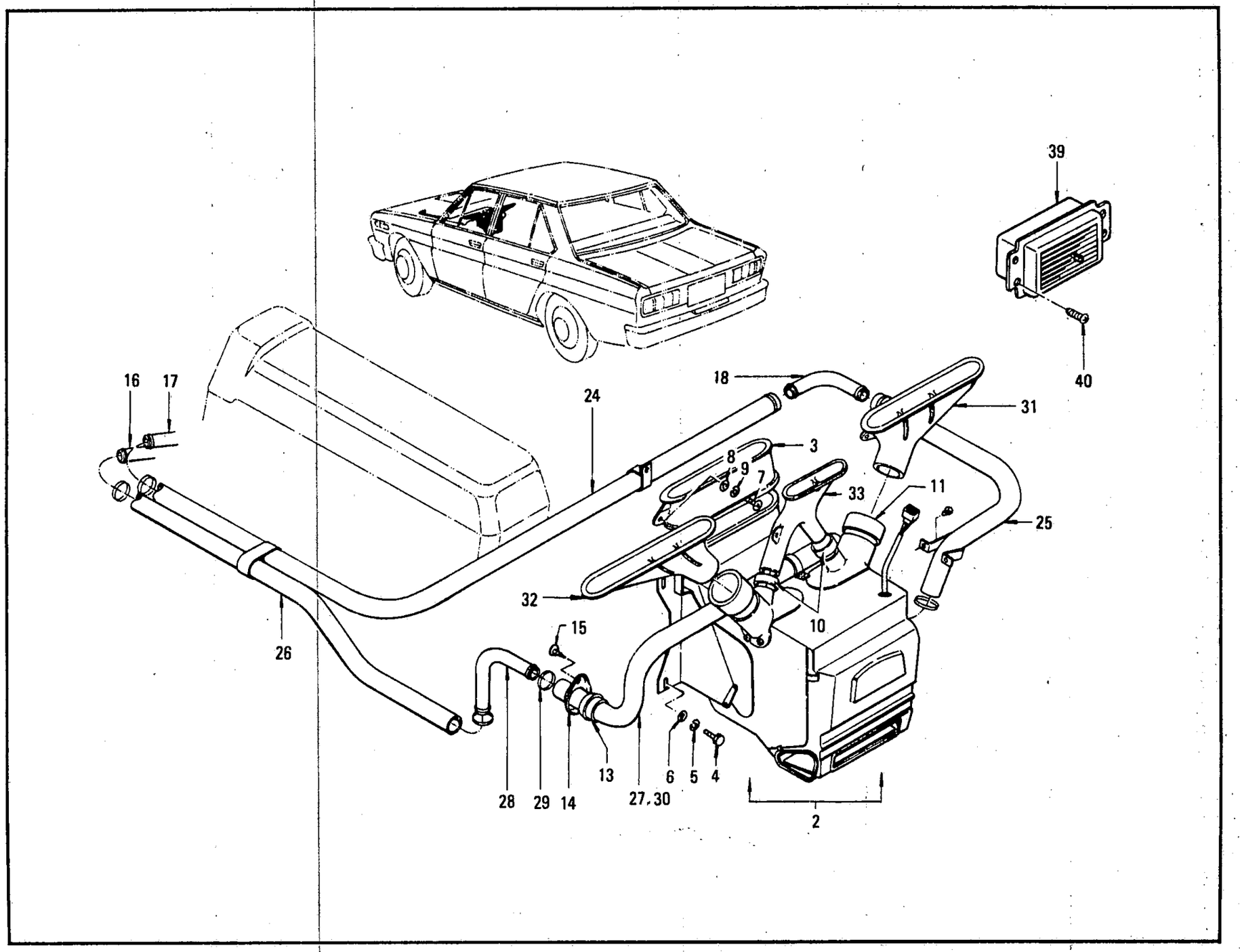

ILLUSTRATION **144 c**

© 1972 NISSAN MOTOR CO., LTD.

REVISED: DECEMBER, 1972

PRINTED IN JAPAN

ROOM HEATER (SD22)

S	KEY NO.	PART NO.	DESCRIPTION	Q'TY	UNIT PKG FOR DIST.	APPLIED MODEL	APPLIED DATE FROM	APPLIED DATE UP TO	ICA N	ICA F	SUPERSEDED
	1D1	27010-E0900	KIT-CAR HEATER FRONT	1	1	Op SD22 R DRIVE					
	D2	27010-E1900	KIT-CAR HEATER FRONT	1		Op SD22 L DRIVE					
	2D1	27011-E0101	UNIT-CAR HEATER FRONT	1	1	Op SD22					
	3D1	27012-E0101	DUCT-AIR INTAKE	1		Op SD22					
	4D1	00114-52010	BOLT-HEX	4	50	Op SD22					
	5D1	00915-11510	WASHER-SPRING	4	50	Op SD22					
	6D1	00915-41510	WASHER-PLAIN	4	50	Op SD22					
	7D1	00414-01610	SCREW-MACHINE	2	50	Op SD22					
	8D1	00915-41010	WASHER-PLAIN	2	50	Op SD22					
	9D1	00915-11010	WASHER-SPRING	2	50	Op SD22					
	10D1	27161-E0100	HOSE-DEMISTER A	2	5	Op SD22					
	11D1	27162-E0100	HOSE-DEMISTER B	2	5	Op SD22					
	12D1	27016-E0100	COVER-HEATER SIDE	1	1	Op SD22					
	13D1	27035-73000	GROMMET	2	10	Op SD22					
	14D1	27051-73000	COVER-GROMMET	2	5	Op SD22					
	15D1	00514-01610	SCREW-TAPPING	2	50	Op SD22					
	16D1	27076-32600	CONNECTOR-BEND	1	1	Op SD22					
	17D1	27070-66000	CONNECTOR-STRAIGHT	1	5	Op SD22					
	18D1	27063-73000	CONNECTOR-ELBOW	1	5	Op SD22					
	19D1	27069-37600	CLAMP-HOSE	1	1	Op SD22					
	20D1	27130-78105	ASSY-AUTOMATIC COCK	1	1	Op SD22					
	21D1	27020-E0105	HOSE-WATER	1	5	Op SD22			Y	Y	27020-78105
	22D1	27021-E0105	HOSE-WATER	1	5	Op SD22 RD			Y	Y	27021-78105

NOTE:

© 1972 NISSAN MOTOR CO., LTD.

PRINTED IN JAPAN

ROOM HEATER (SD22)

S	KEY NO.	PART NO.	DESCRIPTION	QTY	UNIT PKG FOR DIST.	APPLIED MODEL	APPLIED DATE FROM	APPLIED DATE UP TO	ICA N	ICA F	SUPERSEDED
	2301	00721-12200	CLAMP	2	10	Op SD22					
*	2401	27041-89915	HOSE-WATER	1	5	Op SD22					
	02	27051-89915	HOSE-WATER	1	5	Op SD22			Y	Y	27041-89915
*	2501	27040-89930	HOSE-WATER	1	5	Op SD22					
	02	27050-89930	HOSE-WATER	1	5	Op SD22			Y	Y	27050-89930
	2601	27050-89970	HOSE-WATER	1	5	Op SD22			Y	Y	27040-89970
	2701	27022-E0101	HOSE-WATER	1	5	Op SD22 R DRIVE			Y	Y	27022-E0100
	2801	27068-72600	CONNECTOR-WATER HOSE	1	5	Op SD22					
	2901	27051-E0100	CLIP-HOSE	4	5	Op SD22					
	3001	27022-E1801	HOSE-WATER	1	5	Op SD22 L DRIVE			Y	Y	27022-E1800
	3101	27171-E0101	NOZZLE-DEMISTER RH	1	1	SD22			Y	Y	27171-E0100◎
	3201	27172-E0101	NOZZLE-DEMISTER LH	1	1	SD22			Y	Y	27172-E0100
	3301	27175-E0100	NOZZLE-DEMISTER CENTER	1	1	SD22					
	3401	00511-01310	SCREW-TAPPING	6	50	SD22					
	3501	08964-10510	NUT-SPRING TYPE B	6	50	SD22					
	3601	68710-E0101	ASSY-HEATER CONTROL	1	1	Op SD22					
	3701	68726-E0101	KNOB-HEATER CONTROL B	1	5	Op SD22					
	3801	00314-01014	SCREW-WITH SPRING WASHER	4	50	Op SD22					
	3901	68750-E0100	ASSY-SIDE VENTILATOR	2	1	SD22					
	4001	00514-01010	SCREW-TAPPING	4	50	SD22					
	4101	27131-E0100	ASSY-CABLE HEATER	1	5	Op SD22 R DRIVE					
	02	27131-E0101	ASSY-CABLE HEATER CONTROL	1	5	Op SD22 R DRIVE					
	03	27131-E1200	ASSY-CABLE HEATER CONTROL	1	5	Op SD22 L DRIVE					

NOTE:

© 1972 NISSAN MOTOR CO., LTD.

REVISED: DECEMBER, 1972
PRINTED IN JAPAN

ROOM HEATER (SD22)

S	KEY NO.	PART NO.	DESCRIPTION	Q'TY	UNIT PKG FOR DIST.	APPLIED MODEL	APPLIED DATE FROM	APPLIED DATE UP TO	ICA N	ICA F	SUPERSEDED
	4104	27131-E1201	ASSY-CABLE HEATER CONTROL	1	5	Up SD22 LD					

NOTE:

© 1972 NISSAN MOTOR CO., LTD.

PRINTED IN JAPAN

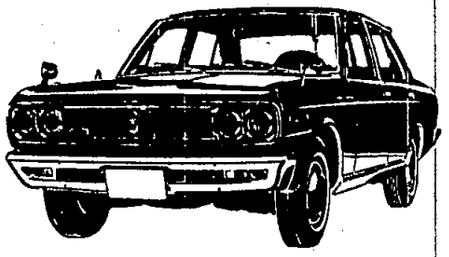

NOTE

NISSAN MOTOR CO., LTD.

Printed in Japan

NOTE

Printed in Japan

NISSAN MOTOR CO., LTD.

CAR COOLER [L24, L20(A) & L23 DASH TYPE]

1 KIT-CAR COOLER DASH TYPE;(inc 2,3,17,22)
3 COMP.-AUXILIARY PARTS FOR COOLER"A";(inc 4 ~ 15)
17 COMP-AUXILIARY PARTS FOR COOLER"B";(inc 18 ~ 22)
22 KIT-INSULATOR FLOOR;(inc 23 ~ 26)

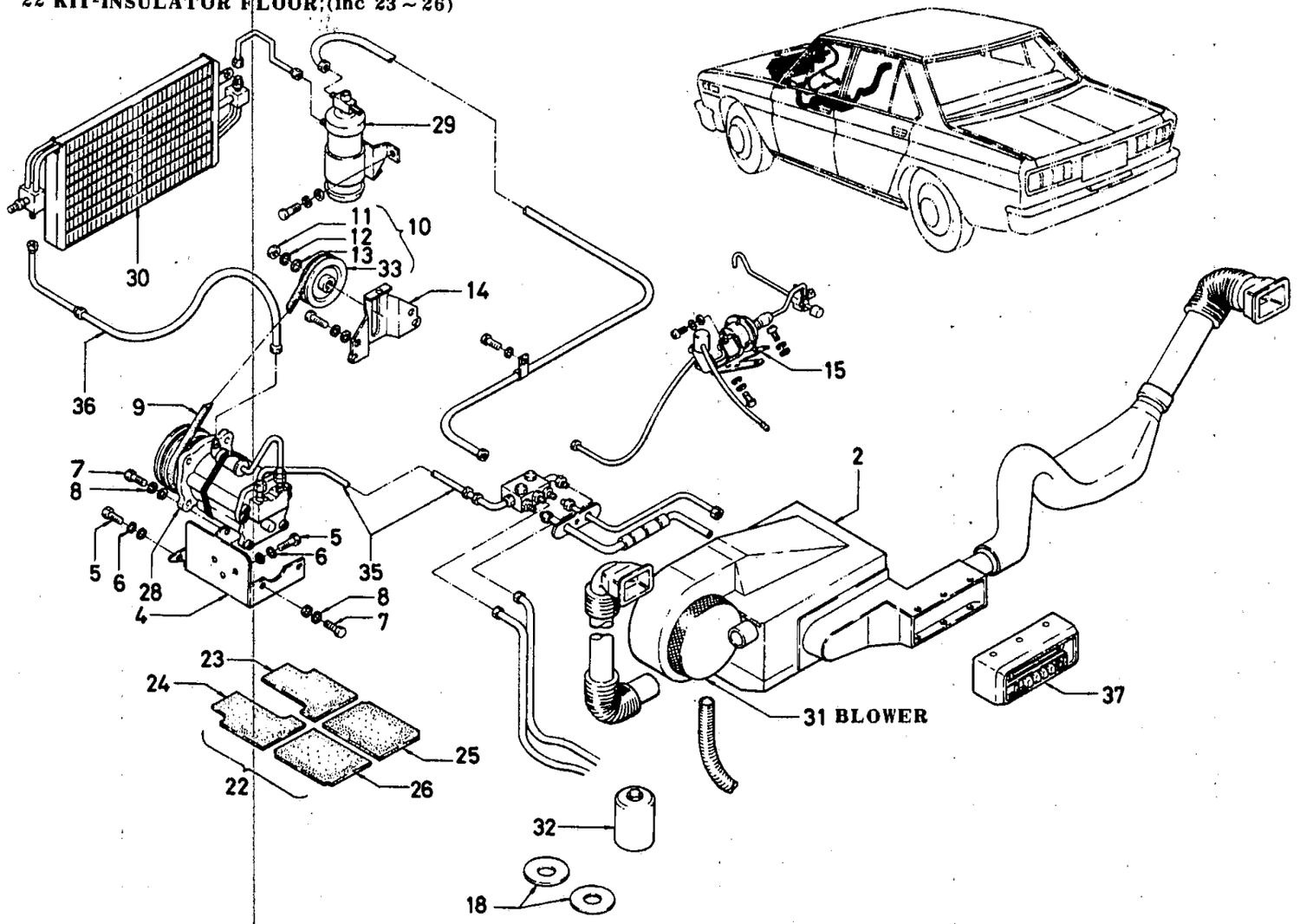

ILLUSTRATION **145**

© 1972 NISSAN MOTOR CO., LTD.

REVISED: DECEMBER, 1972

PRINTED IN JAPAN

CAR COOLER (L24, L20(A) & L23 DASH TYPE)

S	KEY NO.	PART NO.	DESCRIPTION	Q'TY	UNIT PKG FOR DIST.	APPLIED MODEL	APPLIED DATE FROM	APPLIED DATE UP TO	ICA N	ICA F	SUPERSEDED
	101	27600-E0100	KIT-CAR COOLER DASH TYPE (HITACHI)	1		OP L23 R DRIVE		0969			
#	02	27600-E1800	KIT-CAR COOLER DASH TYPE (HITACHI)	1		OP L23 L DRIVE		0969			
	201	27110-E0100	COMP-CAR COOLER DASH TYPE	1		OP L23 R DRIVE		0969			
#	02	27110-E1800	COMP-CAR COOLER DASH TYPE	1		OP L23 L DRIVE		0969			
	301	27820-E0100	COMP-AUXILIARY PARTS FOR COOLER 'B'	1		OP L23		0969			
	401	11910-E0100	BRACKET-COMPRESSOR	1	1	OP L23		0969			
	501	00131-62210	BOLT-HEX 3/8-16 UNC	4	50	OP L23		0969			
	601	00915-11610	WASHER-SPRING 3/8	4	50	OP L23		0969			
	701	00114-51610	BOLT-HEX 5/16-16 UNC	4	50	OP L23		0969			
	801	00915-11510	WASHER-SPRING 5/16	4	50	OP L23		0969			
*	901	11920-78101	BELT-COMPRESSOR	1	1	OP L23		0969			
	02	11920-E5200	BELT-COMPRESSOR	1	1	OP L23			Y	N	11920-78101
	1001	11925-73400	ASSY-PULLEY IDLER COMPRESSOR	1	1	OP L23		0969			
	1101	41005-16505	NUT-HEX LOCK 3/8-24	1	10	OP L23		0969			
	02	41005-16505	NUT-HEX LOCK 3/8-24	1	10	OP L23		0969			
	1201	00915-11610	WASHER-SPRING 3/8	1	50	OP L23		0969			
	1301	00915-41610	WASHER-PLAIN 3/8	1	50	OP L23		0969			
	1401	11935-73400	BRACKET-PULLEY IDLER COMPRESSOR	1	1	OP L23		0969			
	1501	27760-E0100	KIT-FAST IDLE CONTROL	1	1	OP L23		0969			
	02	27760-E0125	KIT-FAST IDLE CONTROL	1	1	OP L23		0969	Y	Y	27760-E0100
*	1601	17030-E0605	KIT-FUEL PUMP ELECTRIC	1	1	OP L23		0969			

NOTE:

© 1972 NISSAN MOTOR CO., LTD.

PRINTED IN JAPAN

CAR COOLER (L24, L20(A) & L23 DASH TYPE)

S	KEY NO.	PART NO.	DESCRIPTION	Q'TY	UNIT PKG FOR DIST.	APPLIED MODEL	APPLIED DATE FROM	APPLIED DATE UP TO	ICA N	ICA F	SUPERSEDED
	1602	17010-E0111	KIT-FUEL PUMP ELECTRIC	1	1	OP L23		0969	C	N	17030-E0605
	1701	27830-E0100	COMP-AUXILIARY PARTS FOR COOLER 'B'	1		OP L23		0969			
	1801	54039-73000	SPACER-SEAT FRONT SPRING	2	5	OP L23		0969			
	1901	68530-E0101	BOX-GLOVE	1	1	OP L23		0969			
	2001	66590-E0100	COVER-2ND VENT HOLE	2	5	OP L23		0969			
*	2101	00511-01010	SCREW-TAPPING	6	50	OP L23		0969			
	02	00511-01012	SCREW-TAPPING	6	50	OP L23		0969	Y	N	00511-01010
	2201	27767-78001	KIT-INSULATOR FLOOR	1	1	OP L23		0969			
	2301	74925-78002	ASSY-INSULATOR FLOOR FRONT RH	1	1	OP L23		0969			
	02	74920-E0111	FELT-FLOOR FRONT RH	1		OP L23		0969	Y	Y	74925-78002
	2401	74926-78002	ASSY-INSULATOR FLOOR FRONT LH	1	1	OP L23		0969			
	2501	74927-78001	ASSY-INSULATOR FLOOR REAR RH	1	1	OP L23		0969			
	2601	74928-78001	ASSY-INSULATOR FLOOR REAR LH	1	1	OP L23		0969			
*	2701	74925-65000	FASTENER-DURABLE DOT	12	1	OP L23		0969			
	2801	27630-65001	ASSY-COMPRESSOR	1	1	OP L23		0969			
	2901	27640-E0100	TANK-LIQUID	1	1	OP L23		0969			
	3001	27650-E0100	ASSY-CONDENSER	1	1	OP L23		0969			
	3101	27665-69000	BLOWER	1	1	OP L23		0969			
	3201	27706-65000	REFRIGERANT	1	1	OP L23		0969			
	3301	11926-73400	PULLEY-IDLER	1		OP L23		0969			
	3401	27727-E0100	THERMOSTAT	1	1	OP L23		0969			

NOTE:

© 1972 NISSAN MOTOR CO., LTD.

PRINTED IN JAPAN

CAR COOLER (L24, L20(A) & L23 DASH TYPE)

S	KEY NO.	PART NO.	DESCRIPTION	Q'TY	UNIT PKG FOR DIST.	APPLIED MODEL	APPLIED DATE FROM	APPLIED DATE UP TO	ICA N	ICA F	SUPERSEDED
	3501	27687-E0101	HOSE-FLEXIBLE PS	1	5	OP L23		0969			
	3601	27685-E0101	HOSE-FLEXIBLE PD	1	5	OP L23		0969			
	3701	27623-73400	SWITCH-CONTROL	1	1	OP L23		0969			
	3801	27600-E3226	KIT-CAR COOLER DASH TYPE	1		OP SUPER CUSTOM	1069				
	02	27600-E3025	KIT-CAR COOLER DASH TYPE	1		OP P-DX	1069				
*	3901	11720-E3000	BELT-FAN	1	1	OP P-DX	1069				
*	02	11720-E3010	BELT-FAN	1	1	OP P-DX	1069		Y	N	11720-E3000
*	03	11720-E3011	BELT-FAN	1	1	OP P-DX		0969	Y	N	11720-E3010
	04	11720-E3015	BELT-FAN	1		OP P-DX		0969	N	N	11720-E3011
	4001	11925-E3010	ASSY-PULLEY IDLER	1	1	OP SUPER CUSTOM P-DX	1069				
	4101	11935-E3010	BRACKET-PULLEY IDLER	1	1	OP SUPER CUSTOM P-DX	1069				
	4201	11938-E3000	SPACER-IDLER BRACKET	1	10	OP SUPER CUSTOM P-DX	1069				
	4301	11916-21001	BOLT-HEX M8X1.25	1	10	OP SUPER CUSTOM P-DX	1069				
	4401	08915-13810	WAHER-SPRING LOCK	3	50	OP SUPER CUSTOM D-DX	1069				
	4501	08224-82810	STUD-M8X1.25	2	25	OP SUPER CUSTOM P-DX	1069				
	02	43067-47600	STUD-M8X1.25	2	5	OP SUPER CUSTOM P-DX	1069		Y	N	08224-82810
	4601	08911-20810	NUT-M8X1.25	2	50	OP SUPER CUSTOM P-DX	1069				
	4701	11920-E3000	BELT-COMPRESSOR	1	1	OP SUPER CUSTOM P-DX	1069				

NOTE:

© 1972 NISSAN MOTOR CO., LTD.

PRINTED IN JAPAN

CAR COOLER (L24, L20(A) & L23 DASH TYPE)

S	KEY NO.	PART NO.	DESCRIPTION	QTY	UNIT PKG FOR DIST.	APPLIED MODEL	APPLIED DATE FROM	APPLIED DATE UP TO	ICA N	ICA F	SUPERSEDED
	4702	11920-E3001	BELT-COMPRESSOR FOR POWER STEERING	1	1	OP SUPER R DRIVE	1069				
	4801	11910-E3000	BRACKET-COMPRESSOR	1		OP SUPER CUSTOM P-DX	1069				
	4901	11911-E3000	BOLT-HEX	4	10	OP SUPER CUSTOM P-DX	1069				
	5001	08915-14010	WASHER-SPRING	4	50	OP SUPER CUSTOM P-DX	1069				
	5101	00134-52010	BOLT-HEX	2	50	OP SUPER CUSTOM P-DX	1069				
	5201	11915-E0100	BOLT-COMPRESSOR	2	10	OP SUPER CUSTOM P-DX	1069				
	5301	00915-11510	WASHER	4	50	OP SUPER CUSTOM P-DX	1069				
	5401	21051-E3200	PULLEY-FAN PUMP	1	1	OP P-DX	1069				
	5501	21060-E3201	ASSY-SPIDER FAN	1	1	OP P-DX	1069				
	5601	08911-10610	NUT-HEX	4	50	OP P-DX	1069				
	5701	08915-13610	WASHER-SPRING	4	50	OP P-DX	1069				
	5801	21082-E3200	ASSY-COUPLING FLUIDE	1	1	OP P-DX	1069				
	02	21082-R1025	ASSY-COUPLING FLUIDE	1	1	OP P-DX	1069		Y	N	21082-E3200
	5901	08226-61610	STUD-M6	4	50	OP P-DX	1069				
	6001	08911-10610	NUT-HEX M6	4	50	OP P-DX	1069				
	6101	08915-13610	WASHER-SPRING M6	4	50	OP P-DX	1069				
	6201	21475-E3000	ASSY-SHROUD	1	1	OP P-DX	1069				
	6301	27851-E0100	HARNESS-COOLER A	1		OP SUPER CUSTOM P-DX	1069				
	6401	27852-E0100	HARNESS-COOLER B	1		OP SUPER CUSTOM P-DX	1069				

NOTE:

© 1972 NISSAN MOTOR CO., LTD.

REVISED: DECEMBER, 1972

PRINTED IN JAPAN

CAR COOLER (L24, L20(A) & L23 DASH TYPE)

S	KEY NO.	PART NO.	DESCRIPTION	Q'TY	UNIT PKG FOR DIST.	APPLIED MODEL	APPLIED DATE FROM	APPLIED DATE UP TO	ICA N	ICA F	SUPERSEDED
	6501	27853-E0100	DIODE	1	1	OP SUPER CUSTOM P-DX	1069				
	6601	25230-65001	COMP HELAY COOLER	1	1	OP SUPER CUSTOM P-DX	1069				
	6701	27760-E3025	KIT-CONTROL FAST IDLE	1	1	OP SUPER CUSTOM P-DX	1069				
	6801	27761-78001	DIAPHRAGM	1	1	OP SUPER CUSTOM P-DX	1069				
	6901	27762-78001	CLAMP	1	1	OP SUPER CUSTOM P-DX	1069				
	7001	27771-E0100	BRACKET	1	1	OP SUPER CUSTOM P-DX	1069				
	7101	27763-E0100	ASSY-SWITCH VACUUM	1	1	OP SUPER CUSTOM P-DX	1069				
	7201	08310-61610	SCREW	5	50	OP SUPER CUSTOM P-DX	1069				
	02	08310-61612	SCREW	5	50	OP SUPER CUSTOM P-DX	1069		Y	N	08310-61610
	7301	08915-13610	WASHER-PLAIN M6	5	50	OP SUPER CUSTOM P-DX	1069				
	7401	08915-43610	WASHER-SPRING M6	5	50	OP SUPER CUSTOM P-DX	1069				
	7501	27765-E0600	HOSE VACUUM M	1	1	OP SUPER CUSTOM P-DX	1069				
	7601	27766-E0100	HOSE-VACUUM D	1	1	OP SUPER CUSTOM P-DX	1069				
	7701	27614-78200	PLUG-CONNECTOR	1	5	OP SUPER CUSTOM P-DX	1069				
	7801	27089-E4100	PLUG-CONNECTOR	1		OP SUPER CUSTOM P-DX	1069				

NOTE:

© 1972 NISSAN MOTOR CO., LTD.

PRINTED IN JAPAN

CAR COOLER (L24, L20(A) & L23 DASH TYPE)

S	KEY NO.	PART NO.	DESCRIPTION	Q'TY	UNIT PKG FOR DIST.	APPLIED MODEL	APPLIED DATE FROM	APPLIED DATE UP TO	ICA N	ICA F	SUPERSEDED
	7901	27614-E3000	PLUG-CONNECTOR	1	5	OP SUPER CUSTOM P-DX	1069				
◄	8001	27614-E3001	PLUG-CONNECTOR	1		OP SUPER CUSTOM P-DX	1069				
	02	27614-E3002	PLUG-CONNECTOR	1	5	OP SUPER CUSTOM P-DX	1069		Y	N	27614-E3001
	8101	54039-73000	SPACER-FRONT COIL SPRING	2	5	OP SUPER CUSTOM P-DX	1069				
	8201	00911-14410	NUT-HEX	2	50	OP SUPER CUSTOM P-DX	1069				
	8301	66590-E0100	COVER-2ND VENT HOLE	2	5	OP SUPER CUSTOM P-DX	1069				
●	8401	00511-01010	SCREW	6	50	OP SUPER CUSTOM P-DX	1069				
	02	00511-01012	SCREW	6	50	OP SUPER CUSTOM P-DX	1069		Y	N	00511-01010
	8501	66558-E0101	BRACKET-VENT KNOB MOUNTING RH	1	5	OP SUPER CUSTOM P-DX	1069				
	8601	66559-E0101	BRACKET-VENT KNOB MOUNTING LH	1	5	OP SUPER CUSTOM P-DX	1069				
	8701	64821-73000	PLUG-HOLE 10	2	10	OP SUPER CUSTOM P-DX	1069				
	8801	68530-E0101	BOX-GLOVE	1	1	OP SUPER CUSTOM P-DX	1069				
	8901	27767-78001	KIT-INSULATOR FLOOR	1	1	OP SUPER CUSTOM P-DX	1069				
	9001	74925-78002	ASSY-INSULATOR FLOOR FRONT RH	1	1	O SUPER CUSTOM P-DX	1069				
	9101	74926-78002	ASSY-INSULATOR FLOOR FRONT LH	1	1	OP SUPER CUSTOM P-DX	1069				

NOTE:

© 1972 NISSAN MOTOR CO., LTD.

REVISED: DECEMBER, 1972
PRINTED IN JAPAN

CAR COOLER (L24, L20(A) & L23 DASH TYPE)

S	KEY NO.	PART NO.	DESCRIPTION	Q'TY	UNIT PKG FOR DIST.	APPLIED MODEL	APPLIED DATE FROM	APPLIED DATE UP TO	ICA N	ICA F	SUPERSEDED
	9201	74927-78001	ASS-INSULATOR FLOOR REAR RH	1	1	OP SUPER CUSTOM P-DX	1069				
	9301	74928-78001	ASSY-INSULATOR FLOOR REAR LH	1	1	OP SUPER CUSTOM P-DX	1069				
	9401	74945-65000	FASTENER-DUABLE DOT	12	10	OP SUPER CUSTOM P-DX	1069				
*	9501	17030-E3225	KIT-PUMP ELECTRIC FUEL	1	1	OP SUPER CUSTOM P-DX	1069				
	9601	10117-E0100	LABEL-FUEL PUMP	1	10	OP SUPER CUSTOM P-DX	1069				
*	9701	17020-E0111	ASSY-PUMP FUEL WITH BRACKET	1	1	OP SUPER CUSTOM P-DX	1069				
	02	17010-E0111	ASSY-PUMP FUEL WITH BRACKET	1	1	OP SUPER CUSTOM P-DX	1069		Y	N	17020-E0111
	9801	16420-E3020	COVER-PLATE FUEL PUMP	1	1	OP SUPER CUSTOM P-DX	1069				
*	9901	17099-E3011	GASKET-FUEL PUMP	1	10	OP SUPER CUSTOM P-DX	1069				
	02	17099-E3012	GASKET-FUEL PUMP	1	10	OP SUPER CUSTOM P-DX	1069		Y	N	17099-E3011
	10001	14842-B2001	BOLT-HEX M8X1.2	3	10	OP SUPER CUSTOM P-DX	1069				
	10101	08915-13810	WASHER-SPRING	3	50	OP SUPER CUSTOM P-DX	1069				
	10201	17525-78000	HOSE-FLEXIBLE	2	2	OP SUPER CUSTOM P-DX	1069				
	02	17517-89901	HOSE-FLEXIBLE	2		OP SUPER CUSTOM P-DX	1069		N	N	17525-78000
	10301	24335-E0100	CABLE-FUEL PUMP	1	1	OP SUPER CUSTOM P-DX	1069				

NOTE:

© 1972 NISSAN MOTOR CO., LTD.

PRINTED IN JAPAN

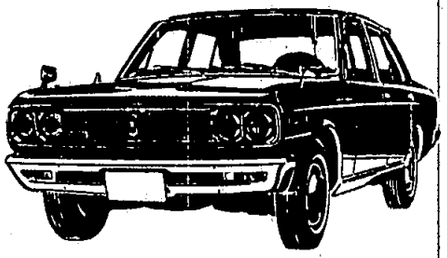

NOTE

NOTE

Printed in Japan

NISSAN MOTOR CO., LTD.

CAR COOLER (J20 DASH TYPE)

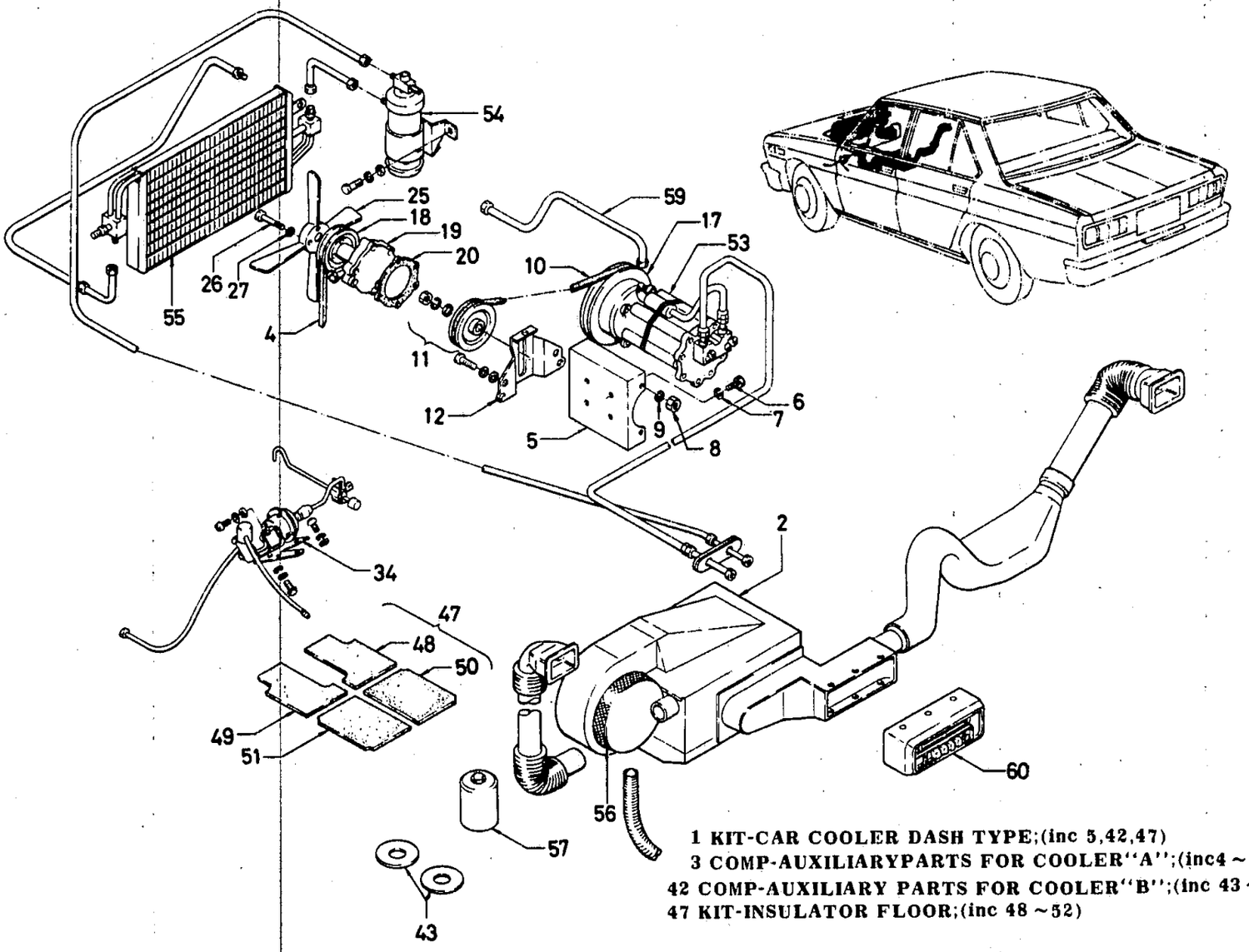

1 KIT-CAR COOLER DASH TYPE;(inc 5,42,47)
3 COMP-AUXILIARYPARTS FOR COOLER"A";(inc4 ~ 41)
42 COMP-AUXILIARY PARTS FOR COOLER"B";(inc 43 ~ 47)
47 KIT-INSULATOR FLOOR;(inc 48 ~ 52)

© 1972 NISSAN MOTOR CO., LTD.
REVISED: DECEMBER, 1972
PRINTED IN JAPAN

CAR COOLER (J20 DASH TYPE)

S	KEY NO.	PART NO.	DESCRIPTION	Q'TY	UNIT PKG FOR DIST.	APPLIED MODEL	APPLIED DATE FROM	APPLIED DATE UP TO	ICA N	ICA F	SUPERSEDED
	101	27600-E0200	KIT-CAR COOLER DASH TYPE (HITACHI)	1		OP J20 R DRIVE		0969			
*	02	27600-E1200	KIT-CAR COOLER DASH TYPE (HITACHI)	1		OP J20 L DRIVE		0969			
	201	27110-E0200	COMP-CAR COOLER DASH TYPE	1	1	OP J20 R DRIVE		0969			
*	02	27110-E1200	COMP-CAR COOLER DASH TYPE	1		OP J20 L DRIVE		0969			
	301	27820-E0200	COMP-AUXILIARY PARTS FOR COOLER 'A'	1		OP J20					
	401	21067-10800	BELT-FAN	1	1	OP J20		0969			
	501	11910-78000	BRACKET-COMPRESSOR	1	1	OP J20		0969			
	601	00134-52010	BOLT-HEX 5/16-24 UNF	4	50	OP J20		0969			
	701	00915-21510	WASHER-SPRING 5/16	4	50	OP J20		0969			
	801	00911-14510	NUT	2	50	OP J20		0969			
	901	00915-21510	WASHER-SPRING 5/16	4	50	OP J20		0969			
*	1001	11920-78010	BELT-COMPRESSOR	1	1	OP J20		0969			
	02	11920-78015	BELT-COMPRESSOR	1	1	OP J20		0969	Y	N	11920-78010
	03	11920-73015	BELT-COMPRESSOR	1	1	OP J20		0969	Y	N	11920-73001
	04	11920-73016	BELT-COMPRESSOR	1	1	OP J20		0969	Y	N	11920-73010
	1101	11925-78000	ASSY-PULLEY IDLER COMPRESSOR	1	1	OP J20		0969			
	1201	11935-78010	BRACKET-PULLEY IDLER COMPRESSOR	1	1	OP J20		0969			
	1301	11937-78010	JOINT-SEAT BRACKET IDLER PULLEY	1	10	OP J20		0969			
	1401	00111-54810	BOLT-HEX 5/16-18 UNC	3	50	OP J20		0969			
	1501	11062-30000	JOINT-SEAT WATER OUTLET	1	50	OP J20		0969			

NOTE:

© 1972 NISSAN MOTOR CO., LTD.

PRINTED IN JAPAN

CAR COOLER (J20 DASH TYPE)

S	KEY NO.	PART NO.	DESCRIPTION	Q'TY	UNIT PKG FOR DIST.	APPLIED MODEL	APPLIED DATE FROM	APPLIED DATE UP TO	ICA N	ICA F	SUPERSEDED
	1601	- 11055-10600	STUD-CYLINDER HEAD	1	10	OP J20		0969			
	1701	- 12307-78000	PULLEY-CRANKSHAFT COMPRESSOR	1	1	OP J20		0969			
	1801	- 12305-61201	PULLEY-CRANK FAN	1	1	OP J20		0969			
•	1901	- 21010-69100	ASSY-WATER PUMP WITH F/C	1	1	OP J20		0969			
	02	- 21010-69126	ASSY-WATER PUMP WITH F/C	1		OP J20			Y	N	21010-69100
	2001	- 21074-73000	GASKET-WATER PUMP	1	10	OP J20		0969			
	2101	- 00114-55510	BOLT-5/16-24 UNF	1	50	OP J20		0969			
	2201	- 00915-11510	WASHER-SPRING	1	50	OP J20		0969			
	2301	- 00114-53510	BOLT-5/16-24 UNF	2	50	OP J20		0969			
	2401	- 00915-11510	WASHER-SPRING	2	50	OP J20		0969			
	2501	- 21060-78000	ASSY-FAN SPIDER	1	1	OP J20		0969			
	2601	- 00124-42210	BOLT-1/4-28 UNF	4	50	OP J20		0969			
	2701	- 00915-11410	WASHER-SPRING 1/4	1	50	OP J20		0969			
	2801	- 23174-73010	BAR-ADJUST ALTERNATOR	1	10	OP J20		0969			
	2901	- 00124-52510	BOLT-HEX 24 UNF	1	50	OP J20		0969			
•	02	- 37120-83000	BOLT-HEX PROPELLER SHAFT	1	10	OP J20		0969			
	3001	- 00915-21510	WASHER-SPRING 5/16	1	50	OP J20		0969			
	3101	- 11714-78000	SPACER-ALTERNATOR	1	10	OP J20		0969			
	3201	- 11713-21000	SHIM	3	10	OP J20		0969			
	3301	- 11712-78000	BOLT-BRACKET TO ALTERNATOR	1	10	OP J20		0969			
	3401	- 27760-E0225	KIT-FAST IDLE CONTROL	1	1	OP J20		0969			
•	3501	- 15208-65002	ASSY-OIL FILTER	1	1	OP J20		0969	Y	Y	15208-65002
•	02	- 15208-65010	ASSY-OIL FILTER	1	1	OP J20		0969			

NOTE:

© 1972 NISSAN MOTOR CO., LTD.

REVISED: DECEMBER, 1972
PRINTED IN JAPAN

CAR COOLER (J20 DASH TYPE)

S	KEY NO.	PART NO.	DESCRIPTION	Q'TY	UNIT PKG FOR DIST.	APPLIED MODEL	APPLIED DATE FROM	APPLIED DATE UP TO	ICA N	ICA F	SUPERSEDED
	3503	15208-65011	ASSY-OIL FILTER	1	1	OP J20		0969	Y	N	15208-65010
	3601	15237-78000	BRACKET-OIL FILTER	1	1	OP J20		0969			
•	3701	15239-10600	GASKET-OIL FILTER	1	10	OP J20		0969	Y	N	15239-10600
	02	15239-B3400	GASKET-OIL FILTER	1	10	OP J20		0969			
	3801	00214-62210	STUD-BOLT 3/8-24 UNF	2	50	OP J20		0969			
	3901	00911-14610	NUT-HEX 3/8-24 UNF	2	50	OP J20		0969			
	4001	22431-10560	SPARK-CORD CLAMP B	1	10	OP J20		0969			
•	4101	17030-E0200	KIT-FUEL PUMP ELECTRIC	1	1	OP J20		0969			
	02	17010-E0111	KIT-FUEL PUMP ELECTRIC	1	1	OP J20			C	N	17030-E0200
	4201	27830-E0100	COMP-AUXILIARY PARTS FOR COOLER	1		OP J20		0969			
	4301	54039-73000	SPACER-SEAT FRONT SPRING	2	5	OP J20					
	4401	68530-E0101	BOX-GLOVE	1	1	OP J20		0969			
	4501	66590-E0100	COVER-2ND VENTILATION HOLE	2	5	OP J20		0969			
•	4601	00511-01010	P/H-TAPPING SCREW #10X10	6	50	OP J20		0969			
	02	00511-01012	P/H-TAPPING SCREW #10X10	6	50	OP J20		0969	Y	N	00511-01010
	4701	27767-78001	KIT-INSULATOR FLOOR	1	1	OP J20		0969			
	4801	74925-78002	ASSY-INSULATOR FLOOR FRONT RH	1	1	OP J20		0969			
	02	74920-E0111	FELT-FLOOR FRONT RH	1		OP J20		0969			
	4901	74926-78002	ASSY-INSULATOR FLOOR FRONT LH	1	1	OP J20		0969			
	5001	74927-78001	ASSY-INSULATOR FLOOR REAR RH	1	1	OP J20		0969			
	5101	74928-78001	ASSY-INSULATOR FLOOR REAR LH	1	1	OP J20		0969			

NOTE:

© 1972 NISSAN MOTOR CO., LTD.

PRINTED IN JAPAN

CAR COOLER (J20 DASH TYPE)

S	KEY NO.	PART NO.	DESCRIPTION	Q'TY	UNIT PKG FOR DIST.	APPLIED MODEL	APPLIED DATE FROM	APPLIED DATE UP TO	ICA N	ICA F	SUPERSEDED
	5201	- 74945-65000	FASTENER-DURABLE DOT	12	10	OP J20		0969			
	5301	- 27630-E0200	ASSY-COMPRESSOR	1	1	OP J20		0969			
	5401	- 27640-E0100	TANK-LIQUID	1	1	OP J20		0969			
	5501	- 27650-E0100	ASSY-CONDENSER	1	1	OP J20		0969			
	5601	- 27665-69000	BLOWER	1	1	OP J20		0969			
	5701	- 27706-65000	REFRIGERANT	1	1	OP J20		0969			
	5801	- 27727-E0100	THERMOSTAT	1	1	OP J20		0969			
	5901	- 27685-E0200	HOSE-FLEXIBLE PD	1	5	OP J20		0969			
	6001	- 27623-73400	SWITCH-CONTROL	1	1	OP J20		0969			
	6101	- 24220-89936	CLIP-HOSE	1	10	OP J20		0969			

NOTE:

ILLUSTRATION **145A**

© 1972 NISSAN MOTOR CO., LTD.

REVISED: DECEMBER, 1972

PRINTED IN JAPAN

NOTE

Printed in Japan

NISSAN MOTOR CO., LTD.

CAR COOLER (H20 DASH TYPE)

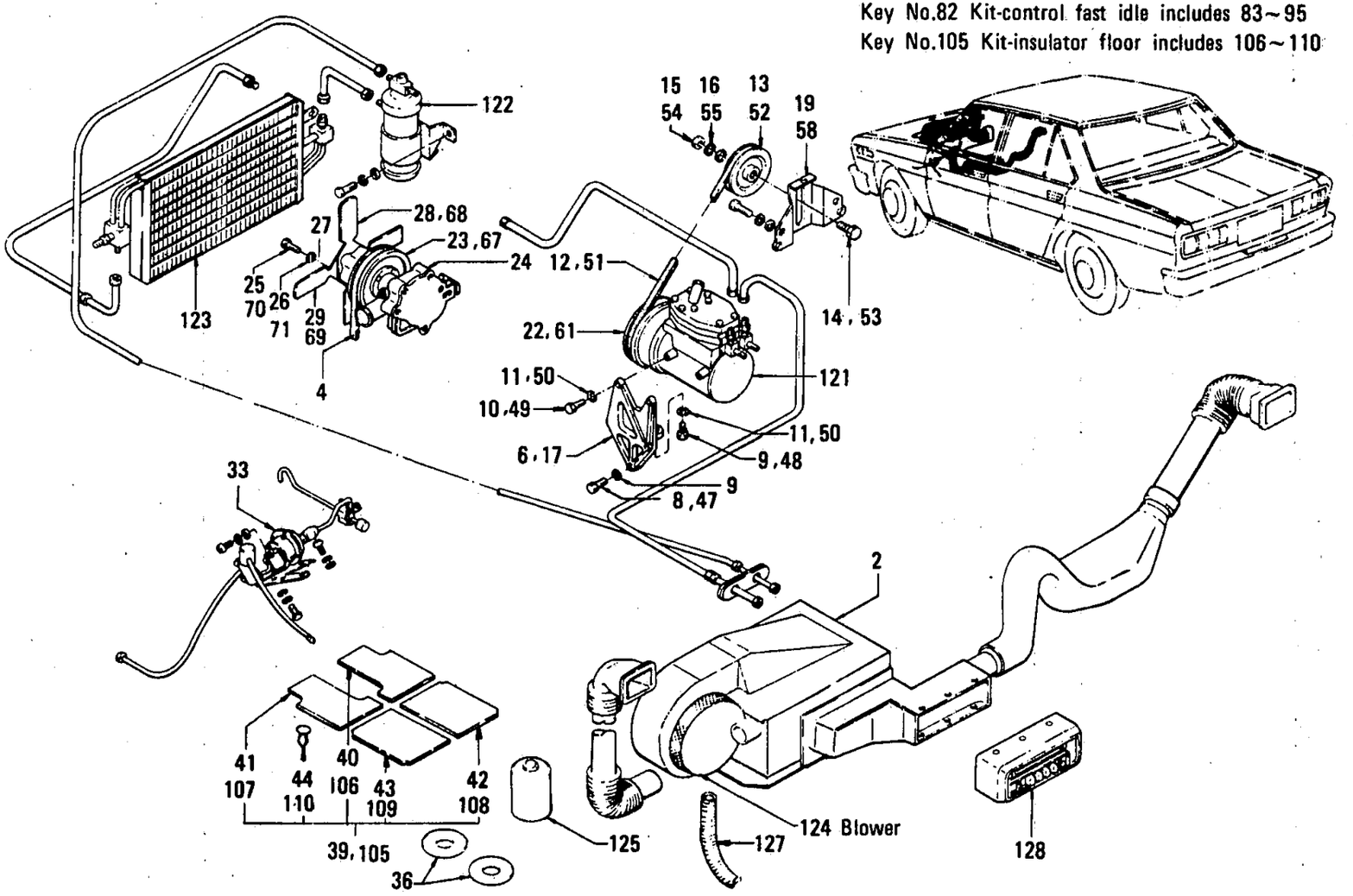

(From oct. '69)
Note; Key No.45 Kit-car cooler dash type includes 82, 105
Key No.82 Kit-control fast idle includes 83~95
Key No.105 Kit-insulator floor includes 106~110

(Up to sep. '69)
Note; Key No.1 Kit-car cooler dash type; includes 3,35,39
Key No.3 Comp-auxiliary parts for cooler "A"; includes 4~34
Key No.35 Comp-auxiliary parts for cooler "B"; includes 36~39
Key NO.39 Kit-insulator floor; includes 40~44

© 1972 NISSAN MOTOR CO., LTD.
REVISED: DECEMBER, 1972
PRINTED IN JAPAN

NISSAN

CAR COOLER (H20 DASH TYPE)

S	KEY NO.	PART NO.	DESCRIPTION	QTY	UNIT PKG FOR DIST.	APPLIED MODEL	APPLIED DATE FROM	APPLIED DATE UP TO	ICA N	ICA F	SUPERSEDED
	1D1	27600-E0700	KIT-CAR COOLER DASH TYPE (HITACHI)	1		Op H20 R DRIVE		0969			
#	D2	27600-E1301	KIT-CAR COOLER DASH TYPE (HITACHI)	1		Op H20 L DRIVE		0969			
	2D1	27110-E0700	COMp-CAR COOLER DASH TYPE	1		Op H20 R DRIVE		0969			
#	D2	27110-E1301	COMp-CAR COOLER DASH TYPE	1		Op H20 L DRIVE		0969			
	3D1	27820-E0700	COMP-AUXILIARY PARTS FOR COOLER'A'	1	1	Op H20		0969			
	4D1	21067-38700	BELT-FAN	1	1	Op H20		0969			
	5D1	16528-78201	ASSY-BODY CLEANER	1	1	Op H20		0969			
	6D1	11910-69200	BRACKET-COMPRESSOR	1	1	Op H20		0969			
	7D1	08131-04210	BOLT-HEX M10X1.5	2	25	Op H20		0969			
	8D1	08131-01810	BOLT-HEX M10X1.5	1	50	Op H20		0969			
	9D1	08915-14010	WASHER-SPRING M10	3	50	Op H20		0969			
	10D1	08130-82510	BOLT-HEX M8X1.25	4	25	Op H20		0969			
	11D1	08915-13810	WASHER-SPRING M8	4	50	Op H20		0969			
*	12D1	11920-E0700	BELT-COMPRESSOR	1	1	Op H20		0969			
	D2	11920-E0705	BELT-COMPRESSOR	1	1	Op H20		0969	Y	N	11920-E0700
	13D1	11925-E0700	ASSY-PULLEY IDLER	1	1	Op H20		0969			
	14D1	11928-69200	BOLT-ADJUSTING IDLER PULLEY	1	1	Op H20		0969			
	15D1	08911-34210	NUT-HEX M12X1.25	1	50	Op H20		0969			
	16D1	08915-14210	WASHER-SPRING M12	1	50	Op H20		0969			
	17D1	08911-20810	NUT-HEX	1	50	Op H20		0969			
	18D1	08915-13810	WASHER-SPRING M8	1	50	Op H20		0969			

NOTE:

© 1972 NISSAN MOTOR CO., LTD.

PRINTED IN JAPAN

CAR COOLER (H20 DASH TYPE)

S	KEY NO.	PART NO.	DESCRIPTION	Q'TY	UNIT PKG FOR DIST.	APPLIED MODEL	APPLIED DATE FROM	APPLIED DATE UP TO	ICA N	ICA F	SUPERSEDED
	1901	11935-69200	BRACKET-PULLEY IDLER	1	1	Up H20		0969			
	2001	11937-66000	JOINT-SEAT BRACKET PULLEY IDLER	1	5	Up H20		0969			
	2101	08120-83010	BOLT-HEX M8x1.25	3	50	Up H20		0969			
	2201	12303-E0700	PULLEY-CRANK SHAFT	1	1	Up H20		0969			
	2301	21051-66000	PULLEY-FAN	1	1	Up H20		0969			
*	2401	21082-78200	ASSY-WATER PUMP WITH FLUID COMPLING	1	1	Up H20		0969			
	02	21082-P0525	ASSY-WATER PUMP WITH FLUID COUPLING	1	1	Up H20		0969	Y	N	21082-78200
	2501	08130-61810	BOLT-HEX M6	4	50	Up H20		0969			
	2601	08915-13610	WASHER-SPRING M6	4	50	Up H20		0969			
	2701	08915-43610	WASHER-FLAIN M6	4	50	Up H20		0969			
	2801	21060-61202	ASS-FAN SPIDER REAR	1	1	Up H20		0969			
	2901	21060-61203	ASSY-FAN SPIDER FRONT	1	1	Up H20		0969			
	3001	08130-62510	BOLT-HEX M6	1	50	Up H20		0969			
	3101	08915-13610	WASHER-SPRING M6	4	50	Up H20		0969			
	3201	22451-69200	HIGH-TENSION CABLE NO.1	1		Up H20		0969			
	3301	27760-E0725	KIT-FAST IDLE CONTROL	1	1	Up H20		0969			
	3401	17030-E0705	KIT-FUEL PUMP ELECTRIC	1	1	Up H20		0969			
	3501	27830-E0100	COMP-AUXILIARY PARTS FOR COOLER'B'	1		Up H20		0969			
	3601	54039-73000	SPACER-SEAT FRONT SPRING	2	5	Up H20		0969			
	3701	66590-E0100	COVER-2ND VENTILATION	2	5	Up H20		0969			
*	3801	00511-01010	SCREW-TAPPING #10X10	6	50	Up H20		0969			

NOTE:

© 1972 NISSAN MOTOR CO., LTD.

REVISED: DECEMBER, 1972
PRINTED IN JAPAN
C

NISSAN

CAR COOLER (H20 DASH TYPE)

S	KEY NO.	PART NO.	DESCRIPTION	Q'TY	UNIT PKG FOR DIST.	APPLIED MODEL	APPLIED DATE FROM	APPLIED DATE UP TO	ICA N	ICA F	SUPERSEDED
	3802	00511-01012	SCREW-TAPPING #10X10	6	50	Up H20		0969	Y	N	00511-01010
	3901	27767-78001	KIT-INSULATOR FLOOR	1	1	Up H20		0969			
	4001	74925-78002	ASSY-INSULATOR FLOOR FRONT RH	1	1	Up H20		0969			
	02	74920-E0111	FELT-FLOOR FRONT RH	1		Up H20		0969	Y	Y	74925-78002
	4101	74926-78002	ASSY-INSULATOR FLOOR FRONT LH	1	1	Up H20		0969			
	4201	74927-78001	ASSY-INSULATOR FLOOR REAR RH	1	1	Up H20		0969			
	4301	74928-78001	ASSY-INSULATOR FLOOR REAR LH	1	1	Up H20		0969			
	4401	74945-65000	FASTERNER-DURABLE DOT	12	10	Up H20		0969			
	4501	27600-E3425	KIT-CAR COOLER DASH TYPE	1		Up H20	1069				
	4601	11910-69200	BRACKET-COMPRESSOR	1	1	Up H20	1069				
	4701	08131-04210	BOLT-HEX	2	25	Up H20	1069				
	4801	08131-01810	BOLT-HEX	1	50	Up H20	1069				
	4901	08130-82510	BOLT-HEX	4	25	Up H20	1069				
	5001	08915-13810	WASHER-SPRING	4	50	Up H20	1069				
*	5101	11920-E0700	BELT-COMPRESSOR	1	1	Up H20	1069				
	02	11920-E0705	BELT-COMPRESSOR	1	1	Up H20	1069		Y	N	11920-E0700
	5201	11925-E0700	ASSY-PULLEY IDLER	1	1	Up H20	1069				
	5301	11928-69200	BOLT-ADJUST IDLER PULLEY	1	1	Up H20	1069				
	5401	08911-34210	NUT-HEX	1	50	Up H20	1069				
	5501	08915-14210	WASHER-SPRING	1	50	Up H20	1069				
	5601	08911-20810	NUT-HEX	1	50	Up H20	1069				
	5701	08915-13810	WASHER-SPRING	1	50	Up H20	1069				

NOTE:

C

PRINTED IN JAPAN

© 1972 NISSAN MOTOR CO., LTD.

CAR COOLER (H20 DASH TYPE)

S	KEY NO.	PART NO.	DESCRIPTION	Q'TY	UNIT PKG FOR DIST.	APPLIED MODEL	APPLIED DATE FROM	APPLIED DATE UP TO	ICA N	ICA F	SUPERSEDED
	5801	11935-69200	BRACKET-IDLER PULLEY	1	1	Op H20	1069				
	5901	11937-66000	JOINT-SEAT BRACKET	1	5	Op H20	1069				
	6001	08120-83010	BOLT-HEX	3	50	Op H20	1069				
	6101	12303-E0700	PULLEY-CRANKSHAFT	1	1	Op H20	1069				
	6201	16528-E3400	ASSY-BODY CLEANER	1	1	Op H20	1069				
	6301	17525-78000	HOSE-FLEXIBLE L=500	2	2	Op H20	1069				
	02	17517-89901	HOSE-FLEXIBLE L=500	2		Op H20	1069		N	N	17525-78000
	6401	08120-86010	BOLT-HEX	2	25	Op H20	1069				
	6501	08915-13810	WASHER-SPRING	2	50	Op H20	1069				
	6601	08931-30610	PLUG-TAPER	1	50	Op H20	1069				
	6701	21051-66000	PULLEY-FAN & PUMP	1	1	Op H20	1069				
	6801	21060-61202	ASSY-FAN SPIDER REAR	1	1	Op H20	1069				
	6901	21060-61203	ASSY-FAN SPIDER FRONT	1	1	Op H20	1069				
	7001	08130-62510	BOLT-HEX	4	50	Op H20	1069				
	7101	08915-13610	WASHER-SPRING	4	50	Op H20	1069				
*	7201	21082-78200	ASSY-COUPLING FLUIDE	1	1	Op H20	1069				
	02	21082-P0525	ASSY-COUPLING FLUIDE	1	1	Op H20	1069		Y	N	21082-78200
	7301	08130-61810	BOLT-HEX	4	50	Op H20	1069				
	7401	08915-13610	WASHER-SPRING	4	50	Op H20	1069				
	7501	08915-43610	WASHER-PLAIN	4	50	Op H20	1069				
	7601	22451-69200	ASSY-CABLE H/T NO.1	1		Op H20	1069				
	7701	24335-E0100	CABLE-FUEL PUMP	1	1	Op H20	1069				
	7801	27851-E0100	HARNESS-COOLER A	1		Op H20	1069				

NOTE:

© 1972 NISSAN MOTOR CO., LTD.

REVISED: DECEMBER, 1972
PRINTED IN JAPAN

CAR COOLER (H20 DASH TYPE)

S	KEY NO.	PART NO.	DESCRIPTION	Q'TY	UNIT PKG FOR DIST.	APPLIED MODEL	APPLIED DATE FROM	APPLIED DATE UP TO	ICA N	ICA F	SUPERSEDED
	7901	27852-E0200	HARNESS-COOLER B	1		Op H20	1069				
	8001	27853-E0100	DIODE	1	1	Op H20	1069				
	8101	25230-65001	COMP-RELAY CLLDER	1	1	Op H20	1069				
	8201	27760-E3425	KIT-CONTROL FAST IDLE	1	1	Op H20	1069				
	8301	27761-78001	ASSY-DIAPHRAGM	1	1	Op H20	1069				
	8401	27762-78001	CLAMP-FAST IDLE	1	1	Op H20	1069				
	8501	27771-E0100	BRACKET-DIAPHRAGM	1	1	Op H20	1069				
	8601	27763-E0100	ASSY-SITCH VACUUM	1	1	Op H20	1069				
*	8701	08310-61610	SCREW	5	50	Op H20	1069				
	D2	08310-61612	SCREW	5	50	Op H20	1069		Y	N	08310-61610
	8801	08915-13610	WASHER-PLAIN	5	50	Op H20	1069				
	8901	08915-43610	WASHER-SPRING	5	50	Op H20	1069				
	9001	27765-E0600	HOSE-VACUUM M	1	1	Op H20	1069				
	9101	27766-E0100	HOSE-VACUUM D	1	1	Op H20	1069				
	9201	27614-78200	PLUG-CONNECTOR	1	1	Op H20	1069				
	9301	27614-E0705	PLUG-CONNECTOR	1		Op H20	1069				
	9401	27614-E0700	PLUG-CONNECTOR	1		Op H20	1069				
	9501	27614-E0710	PLUG-CONNECTOR	1		Op H20	1069				
	9601	00911-14410	NUT-HEX	2	50	Op H20	1069				
	9701	54039-73000	SPACER-SPRING FRONT	2	5	Op H20	1069				
	9801	74942-10900	PLUG-20	1	10	Op H20	1069				
	9901	66590-E0100	COVER-2ND VENT HOLE	2	5	Op H20	1069				
*	10001	00511-01010	SCREW	6	50	Op H20	1069				

NOTE:

© 1972 NISSAN MOTOR CO., LTD.

PRINTED IN JAPAN

CAR COOLER (H20 DASH TYPE)

S	KEY NO.	PART NO.	DESCRIPTION	Q'TY	UNIT PKG FOR DIST.	APPLIED MODEL	APPLIED DATE FROM	APPLIED DATE UP TO	ICA N	ICA F	SUPERSEDED
	10002	00511-01012	SCREW	6	50	Up H20	1069		Y	N	00511-01010
	10101	66558-E0101	BRACKET-VENT KNOB RH	1	5	Up H20	1069				
	10201	66559-E0101	BRACKET-VENT KNOB LH	1	5	Up H20	1069				
	10301	64821-73000	PLUG-HOLE 10	2	10	Up H20	1069				
	10401	68530-E0101	BOX-GLOVE	1	1	Up H20	1069				
	10501	27767-78001	KIT-INSULATOR FLOOR	1	1	Up H20	1069				
	10601	74925-78002	ASSY-INSULATOR FLOOR FRONT RH	1	1	Up H20	1069				
	10701	74926-78002	ASSY-INSULATOR FLOOR FRONT LH	1	1	Up H20	1069				
	10801	74927-78001	ASSY-INSULATOR FLOOR REAR RH	1	1	Up H20	1069				
	10901	74928-78001	ASSY-INSULATOR FLOOR REAR LH	1	1	Up H20	1069				
	11001	74945-65001	FASTENER-DURABLE DOT	12		Up H20	1069				
*	11101	11715-69210	BAR-ADJUSTING ALTERNATOR	1	1	Up H20	1069				
	11201	21067-38700	BELT-FAN	1	1	Up H20	1069				
*	11301	23100-A4810	ASSY-ALTERNATOR (MITSUBISHI)	1	1	Up H20	1069				
	02	23100-P0111	ASSY-ALTERNATOR (MITSUBISHI)	1	1	Up H20	1069		Y	N	23100-A4810
	11401	10117-E0100	LABEL-FUEL PAMP	1	10	Up H20	1069				
*	11501	17020-E0111	ASSY-PUMP FUEL ELECTRIC	1	1	Up H20	1069				
	02	17010-E0111	ASSY-PUMP FUEL ELECTRIC	1	1	Up H20	1069		Y	N	17020-E0111
	11601	17522-E3400	ASSY-TUBE FUEL STRINER TO FUEL PUMP	1	5	Up H20	1069				
	11701	16420-E0100	COVER-FUEL PUMP	1	5	Up H20	1069				
	11801	08911-10810	NUT	3	50	Up H20	1069				

NOTE:

© 1972 NISSAN MOTOR CO., LTD.

REVISED: DECEMBER, 1972
PRINTED IN JAPAN
C

CAR COOLER (H20 DASH TYPE)

S	KEY NO.	PART NO.	DESCRIPTION	Q'TY	UNIT PKG FOR DIST.	APPLIED MODEL	APPLIED DATE FROM	APPLIED DATE UP TO	ICA N	ICA F	SUPERSEDED
	11901	- 08223-81810	STUD	3		Up H20	1069				
	12001	- 08911-10810	NUT M8x1.25	3	50	Up H20	1069				
	12101	- 27630-73600	ASSY-COMPRESSOR	1		Up H20					
	12201	- 27640-E0100	TANK-LIQUID	1	1	Up H20					
	12301	- 27650-E0100	ASSY-CONDENSER	1	1	Up H20					
	12401	- 27665-69000	BLOWER	1	1	Up H20					
	12501	- 27706-65000	REFRIGERANT	1	1	Up H20					
	12601	- 27727-E0100	THERMOSTAT	1	1	Up H20					
	12701	- 27685-E0700	HOSE-FLEXIBLE	1		Up H20					
	12801	- 27623-73400	SWITCH-CONTROL	1	1	Up H20					

NOTE:

© 1972 NISSAN MOTOR CO., LTD.

PRINTED IN JAPAN

NOTE

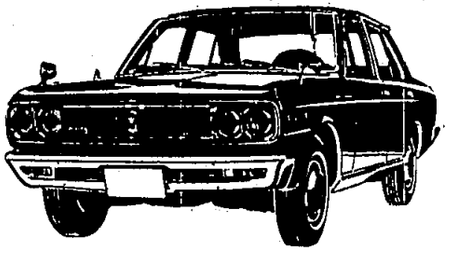

NOTE

Printed in Japan

NISSAN MOTOR CO., LTD.

CAR COOLER DASH TYPE [L24, L20(A) DIESEL KIKI]

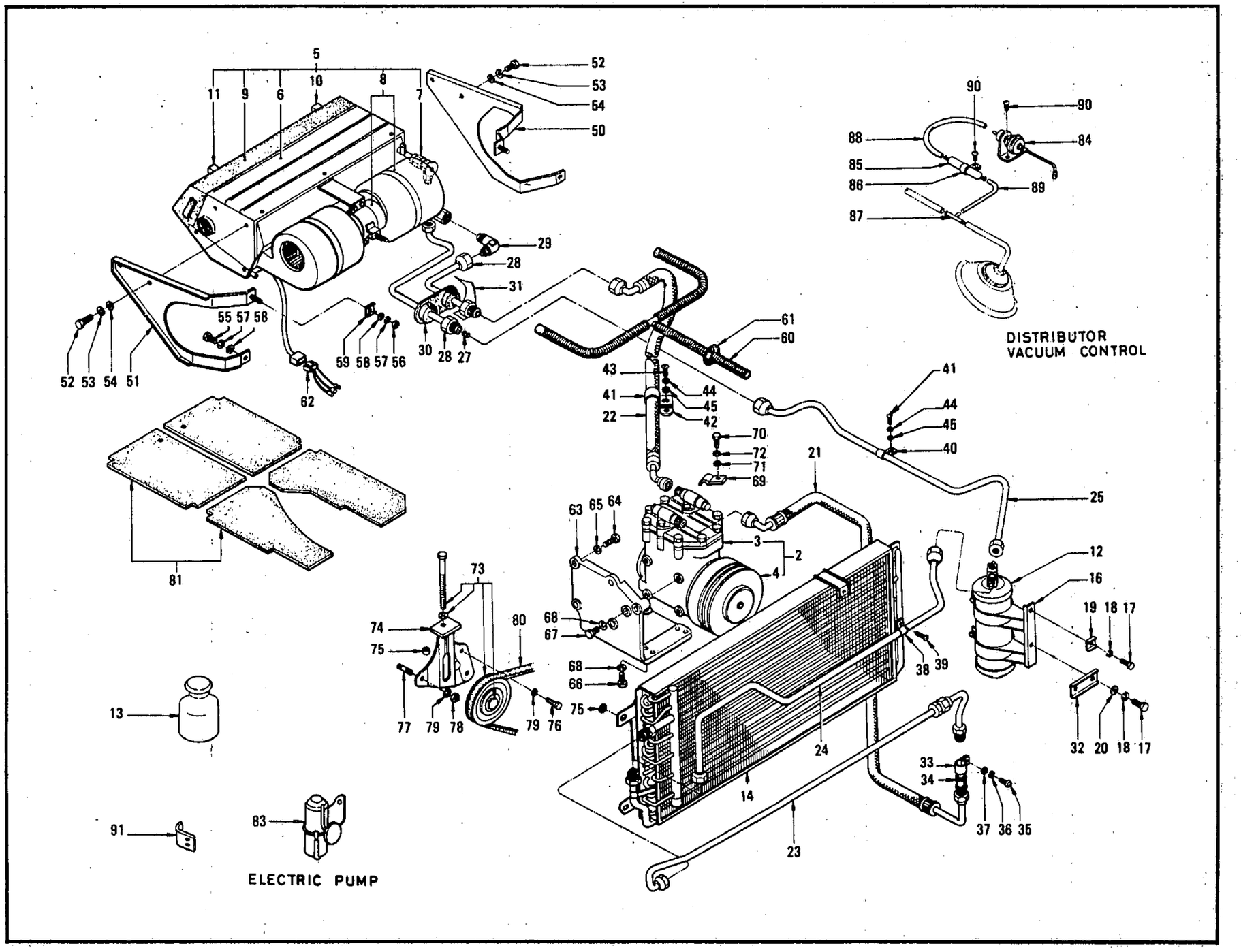

ILLUSTRATION **145c**

© 1972 NISSAN MOTOR CO., LTD.

REVISED: DECEMBER, 1972

PRINTED IN JAPAN

CAR COOLER DASH TYPE (L24, L20(A) DIESEL KIKI)

S	KEY NO.	PART NO.	DESCRIPTION	Q'TY	UNIT PKG FOR DIST.	APPLIED MODEL	APPLIED DATE FROM	APPLIED DATE UP TO	ICA N	ICA F	SUPERSEDED
#	101	- DKK96-00568	COMP-COOLER CAR DASH TYPE (DIESEL KIKI)	1		L24 R DRIVE	0670				
#	02	- DKK96-00562	COMP-COOLER CAR DASH TYPE (DIESEL KIKI)	1		L24 L DRIVE	0670				
#	03	- DKK96-00569	COMP-COOLER CAR DASH TYPE (DIESEL KIKI)	1		L20A R DRIVE	0670				
#	04	- DKK96-00567	COMP-COOLER CAR DASH TYPE (DIESEL KIKI)	1		L20A L DRIVE	0670				
#	201	- DKK96-11085	ASSY-COMPRESURE	1		L24 L20A	0670				
#	301	- DKK96-30255	COMPRESURE(LESS CLUTCH)	1		L24 L20A	0670				
#	401	- DKK96-31050	CLUTCH-MAGNET	1		L24 L20A	0670				
#	501	- DKK96-21422	UNIT-COOLING	1		L24 L20A RD	0670				
#	02	- DKK96-21420	UNIT-COOLING	1		L24 L20A LD	0670				
#	601	- DKK96-33370	EVAPORATER	1		L24 L20A	0670				
#	701	- DKK96-34620	VALVE-EXPANTION	1		L24 L20A	0670				
#	801	- DK941-03020	MOTOR	1		L24 L20A	0670				
#	901	- DK940-29102	ASSY-GRILLE OUTLET(W/THERMO & CONTROL SWITCH)	1		L24 L20A R DRIVE	0670				
#	02	- DK940-29092	ASSY-GRILLE OUTLET(W/THERMO & CONTROL SWITCH)	1		L24 L20A L DRIVE	0670				
#	1001	- DK931-30530	SWITCH-THERMO	1		L24 L20A	0670				
#	1101	- DK931-22940	SWITCH-CONTROL	1		L24 L20A	0670				
#	1201	- DKK96-31873	TANK-LIQUID(0.7L)	1		L24 L20A	0670				
#	1301	- DKK95-39801	REFRIGERANT R12 GAS(400G)	3		L24 L20A	0670				
#	1401	- DKK96-31630	ASSY-CONDENSER	1		L24 L20A	0670				
#	1501	- DK950-41010	PACKING	8		L24 L20A	0670				

NOTE:

© 1972 NISSAN MOTOR CO., LTD.

PRINTED IN JAPAN

CAR COOLER DASH TYPE (L24, L20(A) DIESEL KIKI)

S	KEY NO.	PART NO.	DESCRIPTION	Q'TY	UNIT PKG FOR DIST.	APPLIED MODEL	APPLIED DATE FROM	APPLIED DATE UP TO	ICA N	ICA F	SUPERSEDED
#	1601	DK950-22480	BRACKET-LIQUID TANK	1		L24 L20A	0670				
	1701	08113-81610	BOLT M8 P1.25 TO FIXING BRACKET	2	50	L24 L20A	0670				
	1801	08915-13810	WASHER-SPRING M8 TO FIXING BRACKET	2	50	L24 L20A	0670				
#	1901	DK940-33020	PLATE TO FIXING LIQUID TANK BRACKET	1		L24 L20A	0670				
	2001	08915-43810	WASHER M8 TO FIX LIQUID TANK BRACKET	1	50	L24 L20A	0670				
#	2101	DK953-02692	HOSE-FLEXIBLE HIGH PRESS	1		L24 L20A	0670				
#	2201	DK953-15332	ASSY-HOSE LOW PRESSURE	1		L24 L20A RD	0670				
#	02	DK953-15302	ASSY-HOSE LOW PRESSURE	1		L24 L20A LD	0670				
#	2301	DK953-05402	PIPE-DISCHARGE FOR CONDENSER SIDE	1		L24 L20A	0670				
#	2401	DK953-04882	PIPE-LIQUID FOR CONDENSER TO LIQUID TANK 3/8	1		L24 L20A	0670				
#	2501	DK953-04852	PIPE-LIQUID FOR LIQUID TANK TO CONNECTOR	1		L24 L20A RD	0670				
#	02	DK953-04892	PIPE-LIQUID FOR LIQUID TANK TO CONNECTOR	1		L24 L20A LD	0670				
#	2601	DK953-13910	CONNECTOR UNIT INSIDE	1		L24 L20A RD	0670				
#	02	DK953-10672	CONNECTOR UNIT INSIDE	1		L24 L20A LD	0670				
#	2701	DK956-04170	STRAINER FOR CONNECTOR	1		L24 L20A RD	0670				
#	2801	DK953-10692	CONNECTOR UNIT OUTSIDE	1		L24 L20A RD	0670				
#	02	DK953-10682	CONNECTOR UNIT OUTSIDE	1		L24 L20A LD	0670				
#	2901	DK953-40260	ELBOW UNIT OUTSIDE	1		L24 L20A	0670				
#	3001	27681-73400	GROMMET	1		L24 L20A	0670				

NOTE:

© 1972 NISSAN MOTOR CO., LTD.

REVISED: DECEMBER, 1972
PRINTED IN JAPAN

CAR COOLER DASH TYPE (L24, L20(A) DIESEL KIKI)

S	KEY NO.	PART NO.	DESCRIPTION	Q'TY	UNIT PKG FOR DIST.	APPLIED MODEL	APPLIED DATE FROM	APPLIED DATE UP TO	ICA N	ICA F	SUPERSEDED
#	3101	27736-28510	TAPE-COAL	3		L24 L20A RD	0670				
#	02	27736-28510	TAPE-COAL	2		L24 L20A LD	0670				
#	3201	DK953-26300	STAY FOR FLEXIBLE HOSE	1		L24 L20A	0670				
#	3301	DK953-20020	CLAMP FOR FLEXIBLE HOSE	1		L24 L20A	0670				
	3401	27686-68200	COVER-RUBBER	1	5	L24 L20A RD	0670				
	02	27686-68200	COVER-RUBBER	2	5	L24 L20A LD	0670				
	3501	08310-51612	SCREW M5 P0.8 TO FIX FLEXIBLE HOSE	1		L24 L20A	0670				
	3601	08915-13510	WASHER-SPRING M5 TO FIX FLEXIBLE HOSE	1	50	L24 L20A	0670				
	3701	08915-43510	WASHER-PLAIN M5 TO FIX FLEXIBLE HOSE	1	50	L24 L20A	0670				
#	3801	27693-28510	CLAMP TO FIX LIQUID PIPE	1		L24 L20A	0670				
*	3901	08510-51010	SCREW-TAPPING M5 TO FIX CLAMP	1	50	L24 L20A	0670				
	02	08510-51012	SCREW-TAPPING M5 TO FIX CLAMP	1	50	L20 L20A	0670		Y	N	08510-51010
#	4001	DK953-20990	CLAMP TO FIX LIQUID PIPE	1		L24 L20A	0670				
#	4101	DK953-26290	CLAMP TO FIX HOSE ASSY	1		L24 L20A RD	0670				
#	02	DK953-26110	CLAMP TO FIX HOSE ASSY	1		L24 L20A LD	0670				
#	4201	DK930-25100	DISTANCE TO FIX CLAMP	1		L24 L20A RD	0670				
#	02	DK930-25100	DISTANCE TO FIX CLAMP	1		L20A LD	0670				
	4301	00314-42212	SCREW 1/4-28 TO FIX CLAMP	1		L24 L20A RD	0670				
	02	00314-42212	SCREW 1/4-28 TO FIX CLAMP	1		L20A LD	0670				
	4401	00915-41410	WASHER-SPRING 1/4 TO FIX CLAMP	2	50	L24 L20A RD	0670				

NOTE:

© 1972 NISSAN MOTOR CO., LTD.

PRINTED IN JAPAN

CAR COOLER DASH TYPE (L24, L20(A) DIESEL KIKI)

S	KEY NO.	PART NO.	DESCRIPTION	Q'TY	UNIT PKG FOR DIST.	APPLIED MODEL	APPLIED DATE FROM	APPLIED DATE UP TO	ICA N	ICA F	SUPERSEDED
	4402	00915-41410	WASHER-SPRING 1/4 TO FIX CLAMP	2	50	L20A LD	0670				
	4501	00915-11410	WASHER-PLAIN 1/4 TO FIX CLAMP	2	50	L24 L20A RD	0670				
	02	00915-11410	WASHER-PLAIN 1/4 TO FIX CLAMP	2	50	L20A	0670				
#	4601	DK983-26640	STAY TO FIX SUCTION PIPE CLAMP	1		L24 L20A LD	0670				
#	4701	DK953-22170	COVER TO FIX LIQUID PIPE CLAMP	1		L24 L20A LD	0670				
#	4801	DK953-03562	PIPE-SUCTION FOR	1		L24 L20A LD	0670				
#	4901	DK953-26650	CLAMP	1		L24 L20A LD	0670				
#	5001	DK940-34090	BRACKET FOR UNIT LH	1		L24 L20A RD	0670				
	02	DK940-34850	BRACKET FOR UNIT LH	1		L24 L20A LD	0670				
#	5101	DK940-34100	BRACKET FOR UNIT RH	1		L24 L20A	0670				
#	02	DK940-34840	BRACKET FOR UNIT RH	1		L24 L20A	0670				
	5201	08113-81410	BOLT M8 P1.25 TO FIX UNIT	4	50	L24 L20A	0670				
	5301	08915-13810	WASHER-SPRING M8 TO FIX UNIT	4	50	L24 L20A	0670				
	5401	08915-43810	WASHER-PLAIN M8 TO FIX UNIT	4	50	L24 L20A	0670				
	5501	00114-52210	BOLT 5/16-24 TO FIX BRACKET	2	50	L24 L20A	0670				
	5601	08911-10810	NUT M8 TO FIX BRACKET	2	50	L24 L20A	0670				
	5701	08915-13810	WASHER-SPRING M8 TO FIX BRACKET	4	50	L24 L20A	0670				
	5801	08915-43810	WASHER-PLAIN M8	4	50	L24 L20A	0670				
#	5901	DK940-33020	PLATE	2		L24 L20A	0670				
#	6001	DK940-40120	HOSE-DRAIN	1		L24 L20A RD	0670				

NOTE:

© 1972 NISSAN MOTOR CO., LTD.

REVISED: DECEMBER, 1972
PRINTED IN JAPAN

CAR COOLER DASH TYPE (L24, L20(A) DIESEL KIKI)

S	KEY NO.	PART NO.	DESCRIPTION	Q'TY	UNIT PKG FOR DIST.	APPLIED MODEL	APPLIED DATE FROM	APPLIED DATE UP TO	ICA N	ICA F	SUPERSEDED
#	6002	DK940-40452	HOSE-DRAIN	1		L24 L20A LD	0670				
#	6101	27678-28510	GROMMET TO FIX PLATE	1		L24 L20A	0670				
#	6201	DK931-05610	HARNESS-WIRE	1		L24 L20A	0670				
#	6301	DK930-12870	BRACKET FOR COMPRESSURE	1		L24 L20A	0670				
	6401	08120-82810	BOLT M10 P1.5 TO FIX BRACKET	4	25	L24 L20A	0670				
	6501	08915-14010	WASHER-SPRING M10	4	50	L24 L20A	0670				
	6601	08123-83310	BOLT M8 P1.25 TO FIX COMPRESSURE	4		L24 L20A	0670				
	6701	08123-84210	BOLT M8 P1.25 TO FIX COMPRESSURE SIDE	1		L24 L20A	0670				
	6801	08915-13810	WASHER-SPRING M8	5	50	L24 L20A	0670				
#	6901	DK953-20110	CLAMP TO FIX MAGNET CLUTCH LEAD WIRE	1		L24 L20A	0670				
	7001	08110-81010	BOLT M8 P1.25 TO FIX MAGNET CLUTCH LEAD WIRE	1		L24 L20A	0670				
	7101	08915-43810	WASHER M8 TO FIX MAGNET CLUTCH LEAD WIRE	1	50	L24 L20A	0670				
	7201	08915-13810	WASHER-SPRING M8	1	50	L24 L20A	0670				
	7301	11925-E3010	ASSY-TENTION PULLY	1	1	L24 L20A	0670				
	7401	11935-E3010	BRACKET	1	1	L24 L20A	0670				
	7501	11938-E3000	SPACER	1	10	L24 L20A	0670				
#	7601	DK930-00470	BOLT M8 P1.25 TO FIX TENTION PULLY	1		L24 L20A	0670				
	7701	08223-82810	BOLT-STUD M8 P1.25 TO FIX TENSION PULLY	2	50	L24 L20A	0670				
	7801	08911-10810	NUT M8 P1.25 TO FIX TENSION PULLY	2	50	L24 L20A	0670				

NOTE:

© 1972 NISSAN MOTOR CO., LTD.

PRINTED IN JAPAN

CAR COOLER DASH TYPE (L24, L20(A) DIESEL KIKI)

S	KEY NO.	PART NO.	DESCRIPTION	Q'TY	UNIT PKG FOR DIST.	APPLIED MODEL	APPLIED DATE FROM	APPLIED DATE UP TO	ICA N	ICA F	SUPERSEDED
	7901	08915-13810	WASHER-SPRING M8 TO FIX TENSION PULLY	3	50	L24 L20A	0670				
#	8001	DK930-42220	BELT "V"(1340MM)	1		L24 L20A	0670				
	8101	27787-78001	INSURATOR	1	1	L24 L20A	0670				
#	8201	DK933-01842	CONTROL-THROTTLE	1		L24 L20 RD	0670				
*	8301	17030-E3225	PUMP-ELECTRIC	1	1	L24 L20A	0670				
	02	17010-E0111	PUMP-ELECTRIC	1	1	L24 L20A			C	N	17030-E3225
#	8401	DK931-40212	SWITCH-VACUUM FOR HIGH SPEED CUTING	1		L24 L20A	0670				
#	8501	DK933-11510	TANK FOR VACUUM SWITCH	1		L24 L20A	0670				
#	8601	DK953-20020	CLAMP TO FIX TANK	1		L24 L20A	0670				
#	8701	DK933-11920	CONNECTOR	1		L24 L20A	0670				
#	8801	DK933-11810	HOSE L=115	1		L24 L20A	0670				
#	8901	DK933-11930	HOSE L=300	1		L24 L20A	0670				
#	9001	08510-51214	SCREW-TAPPING	3		L24 L20A	0670				
#	9101	DK933-01810	BRACKET-VENT KNOB	1		L24 L20A LD	0670				
	9201	21060-E3201	ASSY-FAN SPIDER TYPE	1	1	L20A	0670				
	9301	21051-E3200	PULLY-WATER PUMP	1	1	L20A	0670				
	9401	08911-10610	NUT M6 P1.0 TO FIX PUMP PULLY	8	50	L20A	0670				
*	9501	11720-E3000	BELT-"V"(870MM)	1	1	L20A	0670				
*	02	11720-E3010	BELT-"V" (870MM)	1	1	L20A	0670		Y	N	11720-E3000
*	03	11720-E3011	BELT-"V" (870MM)	1	1	L20A	0670		Y	N	11720-E3010
	04	11720-E3015	BELT-"V" (870MM)	1	50	L20A	0670		Y	N	11720-E3011

NOTE:

© 1972 NISSAN MOTOR CO., LTD.

REVISED: DECEMBER, 1972
PRINTED IN JAPAN

CAR COOLER DASH TYPE (L24, L20(A) DIESEL KIKI)

S	KEY NO.	PART NO.	DESCRIPTION	Q'TY	UNIT PKG FOR DIST.	APPLIED MODEL	APPLIED DATE FROM	APPLIED DATE UP TO	ICA N	ICA F	SUPERSEDED
	9601	21082-E3200	ASSY-FEELD COUPLING	1	1	L20A	0670				
	02	21082-R1025	ASSY-FEELD COUPLING	1		L20A	0670		Y	N	21082-E3200
	9701	08915-13610	WASHER-SPRING	8	50	L20A	0670				
	9801	08226-61610	BOLT-STUD M6 P1.0	4	50	L20A	0670				

NOTE:

© 1972 NISSAN MOTOR CO., LTD.

PRINTED IN JAPAN

NOTE

NISSAN MOTOR CO., LTD.

Printed in Japan

NOTE

Printed in Japan

NISSAN MOTOR CO., LTD.

CAR COOLER (L24, L20(A) & L23 TRUNK TYPE)-SEDAN-

1 KIT-CAR COOLER TRUNK TYPE; (inc 2,17)
3 COMP-AUXILIARY PARTS FOR COOLER "A"; (inc 4~15)

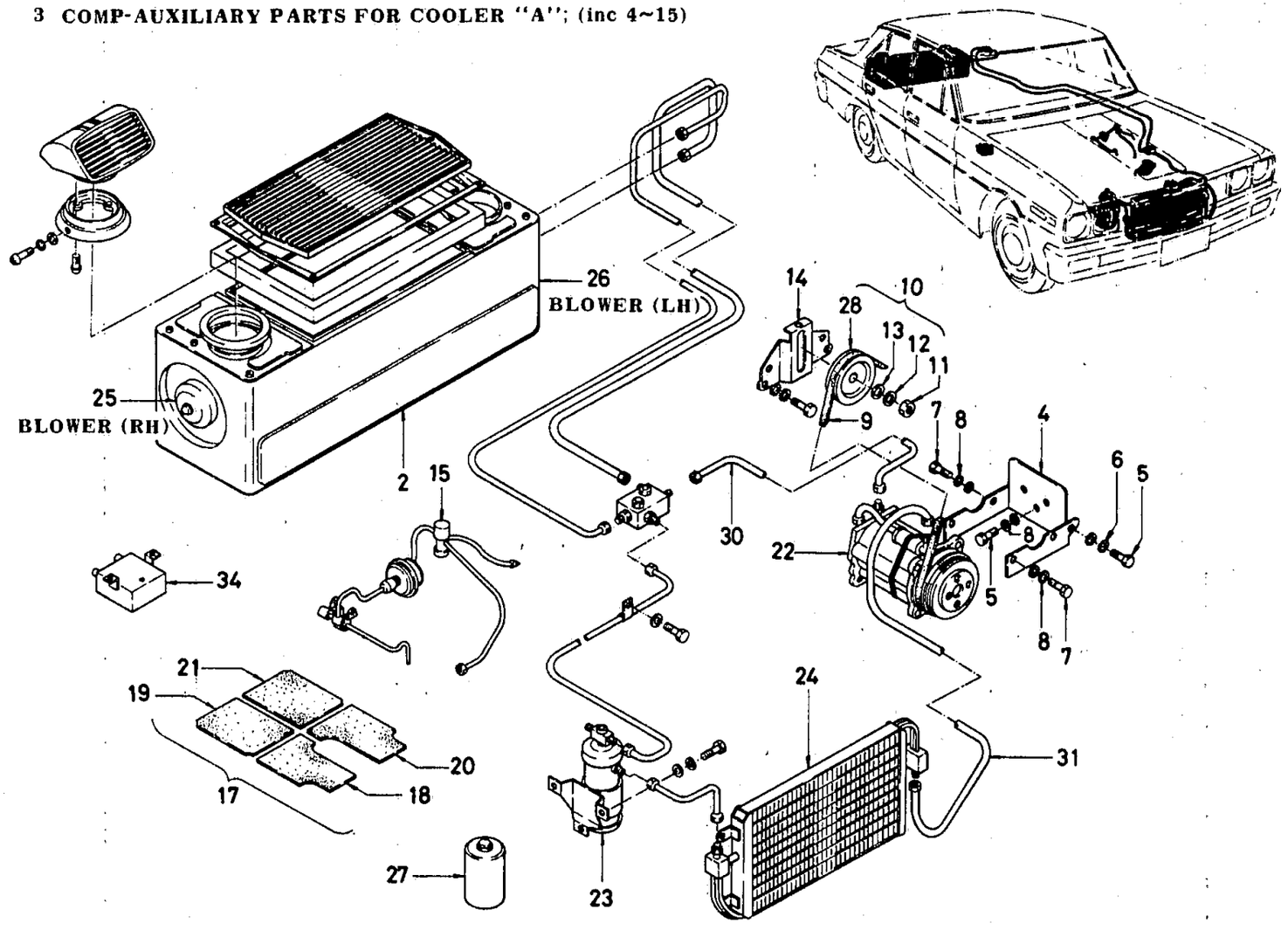

ILLUSTRATION **146**

© 1972 NISSAN MOTOR CO., LTD.

REVISED: DECEMBER, 1972

PRINTED IN JAPAN

CAR COOLER (L24, L20(A) & L23 TRUNK TYPE)-SEDAN-

S	KEY NO.	PART NO.	DESCRIPTION	Q'TY	UNIT PKG FOR DIST.	APPLIED MODEL	APPLIED DATE FROM	APPLIED DATE UP TO	ICA N	ICA F	SUPERSEDED
	101	27700-E0100	KIT-CAR COOLER TRUNK TYPE (HITACHI)	1		OP L23 R DRIVE		0969			
#	02	27700-E1800	KIT-CAR COOLER TRUNK TYPE (HITACHI)	1		OP L23 L DRIVE		0969			
	201	27120-E0100	COMP-CAR COOLER TRUNK TYPE	1		OP L23 R DRIVE		0969			
#	02	27120-E1800	COMP-CAR COOLER TRUNK	1		OP L23 L DRIVE		0969			
	301	27820-E0100	COMP-AUX PARTS FOR COOLER 'A'	1		OP L23		0969			
	401	11910-E0100	BRACKET-COMPRESSOR	1	1	OP L23		0969			
	501	00131-62210	BOLT-HEX 3/8-16 UNC	4	50	OP L23		0969			
	601	00915-11610	WASHER-SPRING 3/8	4	50	OP L23					
	701	00114-51610	BOLT-HEX 5/16-16 UNC	4	50	OP L23		0969			
	801	00915-11510	WASHER-SPRING 5/16	4	50	OP L23		0969			
*	901	11920-78101	BELT-COMPRESSOR	1	1	OP L23		0969			
	02	11920-E5200	BELT-COMPRESSOR	1	1	OP L23			Y	N	11920-78101
	1001	11925-73400	ASSY-PULLEY IDLER COMPRESSOR	1	1	OP L23		0969			
	1101	41005-16505	NUT-HEX LOCK 3/8-24	1	10	OP L23		0969	Y	Y	00911-34610
	1201	00915-11610	WASHER-SPRING 3/8	1	50	OP L23		0969			
	1301	00915-41610	WASHER-PLAIN 3/8	1	50	OP L23		0969			
	1401	11935-73400	BRACKET-PULLEY COMPRESSOR	1	1	OP L23		0969			
	1501	27760-E0125	KIT-FAST IDLE CONTROL	1	1	OP L23		0969	Y	Y	27760-E0100
*	1601	17030-E0605	KIT-FUEL PUMP ELECTRIC	1	1	OP L23		0969			
	02	17010-E0111	KIT-FUEL PUMP ELECTRIC	1	1	OP L23		0969	C	N	17030-E0605
	1701	27767-78001	KIT-INSULATOR FLOOR	1	1	OP L23		0969			

NOTE:

© 1972 NISSAN MOTOR CO., LTD.

PRINTED IN JAPAN

CAR COOLER (L24, L20(A) & L23 TRUNK TYPE)-SEDAN-

S	KEY NO.	PART NO.	DESCRIPTION	Q'TY	UNIT PKG FOR DIST.	APPLIED MODEL	APPLIED DATE FROM	APPLIED DATE UP TO	ICA N	ICA F	SUPERSEDED
	1801	74925-78002	ASSY-INSULATOR FLOOR FRONT RH	1	1	OP L23		0969			
	02	74920-E0111	FELT-FLOOR FRONT RH	1		OP L23		0969	Y	Y	74925-78002
	1901	74926-78002	ASSY-INSULATOR FLOOR FRONT LH	1	1	OP L23		0969			
	2001	74927-78001	ASSY-INSULATOR FLOOR REAR RH	1	1	OP L23		0969			
	02	74928-78001	ASSY-INSULATOR FLOOR REAR LH	1	1	OP L23		0969			
	2101	74945-65000	FASTENER-DURABLE DOT	12	10	OP L23		0969			
	2201	27630-65001	ASSY-COMPRESSOR	1	1	OP L23		0969			
	2301	27640-E0100	TANK-LIQUID	1	1	OP L23		0969			
	2401	27650-E0100	ASSY-CONDENSER	1	1	OP L23		0969			
	2501	27741-E0100	BLOWER RH	1		OP L23		0969			
	2601	27742-E0100	BLOWER LH	1		OP L23		0969			
	2701	27706-65000	REFRIGERANT	1	1	OP L23		0969			
	2801	11926-73400	PULLEY-IDLER	1		OP L23					
	2901	27727-E0100	THERMOSTAT	1	1	OP L23					
	3001	27687-E0101	HOSE-FLEXIBLE PS	1	5	OP L23					
	3101	27685-E0101	HOSE-FLEXIBLE PD	1	5	OP L23					
	3201	27727-F0200	THERMISTOR	1	1	OP L23		0969			
●	3301	27728-F0200	RELAY-THERMO	1	1	OP L23		0969			
	3401	27715-E0100	SWITCH-CONTROL	1	1	OP L23					
	3501	27700-E3226	KIT-CAR COOLER TRUNK TYPE	1		OP SUPER CUSTOM P-DX	1069				
	02	27700-E3025	KIT-CAR COOLER TRUNK TYPE	1		OP P-DX	1069				

NOTE:

© 1972 NISSAN MOTOR CO., LTD.

REVISED: DECEMBER, 1972

PRINTED IN JAPAN

CAR COOLER (L24, L20(A) & L23 TRUNK TYPE)-SEDAN-

S	KEY NO.	PART NO.	DESCRIPTION	Q'TY	UNIT PKG FOR DIST.	APPLIED MODEL	APPLIED DATE FROM	APPLIED DATE UP TO	ICA N	ICA F	SUPERSEDED
*	3601	11720-E3000	BELT-FAN	1	1	OP P-DX	1069				
*	02	11720-E3010	BELT-FAN	1	1	OP P-DX	1069		Y	N	11720-E3000
*	03	11720-E3011	BELT-FAN	1	1	OP P-DX		0969	Y	N	11720-E3010
	04	11720-E3015	BELT-FAN	1	1	OP P-DX		0969	Y	N	11720-E3011
	3701	11925-E3010	ASSY-PULLEY IDLER	1	1	OP SUPER CUSTOM P-DX	1069				
	3801	11935-E3010	BRACKET-PULLEY IDLER	1	1	OP SUPER CUSTOM P-DX	1069				
	3901	11938-E3000	SPACER-IDLER BRACKET	1	10	OP SUPER CUSTOM P-DX	1069				
	4001	11916-21001	BOLT-HEX M8X1.25	1	10	OP SUPER CUSTOM P-DX	1069				
	4101	08915-13810	WASHER-SPRING LOCK	3	50	OP SUPER CUSTOM P-DX	1069				
	4201	08223-82810	STUD-M8X1.25	2	50	OP SUPER CUSTOM P-DX	1069				
	4301	08911-20810	NUT-M8X1.25	2	50	OP SUPER CUSTOM P-DX	1069				
	4401	11920-E3000	BELT-COMPRESSOR	1	1	OP SUPER CUSTOM P-DX	1069				
	02	11920-E3001	BELT-COMPRESSOR FOR POWER STEERING	1	1	OP SUPER R DRIVE	1069				
	4501	11910-E3000	BRACKET-COMPRESSOR	1		OP SUPER CUSTOM P-DX	1069				
	4601	11911-E3000	BOLT-HEX	4	10	OP SUPER CUSTOM P-DX	1069				
	4701	08915-14010	WASHER-SPRING	4	50	OP SUPER CUSTOM P-DX	1069				
	4801	00134-52010	BOLT-HEX	2	50	OP SUPER CUSTOM P-DX	1069				

NOTE:

© 1972 NISSAN MOTOR CO., LTD.

PRINTED IN JAPAN

CAR COOLER (L24, L20(A) & L23 TRUNK TYPE)-SEDAN-

S	KEY NO.	PART NO.	DESCRIPTION	QTY	UNIT PKG FOR DIST.	APPLIED MODEL	APPLIED DATE FROM	APPLIED DATE UP TO	ICA N	ICA F	SUPERSEDED
	4901	11915-E0100	BOLT-COMPRESSOR	2	10	OP SUPER CUSTOM P-DX	1069				
	5001	00915-11510	WASHER	4	50	OP SUPER CUSTOM P-DX	1069				
	5101	21051-E3200	PULLEY-FAN & PUMP	1	1	OP P-DX	1069				
	5201	21060-E3201	ASSY-SPIDER FAN	1	1	OP P-DX	1069				
	5301	08911-01010	NUT-HEX	4		OP P-DX	1069				
	5401	08911-01010	NUT-HEX M6	4		OP P-DX	1069				
	5501	21082-E3200	ASSY-COUPLING FLUID	1	1	OP P-DX	1069				
	02	21082-R1025	ASSY-COUPLING FLUID	1	1	OP P-DX	1069		Y	N	21082-E3200
	5601	08226-61610	STUD-M6	4	50	OP P-DX	1069				
	5701	08911-10610	NUT-HEX M6	4	50	OP P-DX	1069				
	5801	08915-13610	WASHER-SPRING M6	4	50	OP P-DX	1069				
	5901	21475-E3000	ASSY-SHROUD	1	1	OP P-DX	1069				
	6001	27861-E0100	HARNESS-COOLER X	1		OP SUPER CUSTOM P-DX	1069				
	6101	27862-E0100	HARNESS-COOLER Y	1		OP SUPER CUSTOM P-DX	1069				
	6201	27863-E0100	HARNESS-COOLER Z	1		OP SUPER CUSTOM P-DX	1069				
	6301	27852-E0100	HARNESS-COOLER B	1		OP SUPER CUSTOM P-DX	1069				
	6401	27853-E0100	DIODE	1	1	OP SUPER CUSTOM	1069				
	6501	25230-65001	COMP.-RELAY COOLER	1	1	OP SUPER CUSTOM P-DX	1069				
	6601	27740-E3025	KIT-CONTROL FAST IDLE	1	1	OP SUPER CUSTOM P-DX	1069				

NOTE:

© 1972 NISSAN MOTOR CO., LTD.

REVISED: DECEMBER, 1972

PRINTED IN JAPAN

CAR COOLER (L24, L20(A) & L23 TRUNK TYPE)-SEDAN-

S	KEY NO.	PART NO.	DESCRIPTION	Q'TY	UNIT PKG FOR DIST.	APPLIED MODEL	APPLIED DATE FROM	APPLIED DATE UP TO	ICA N	ICA F	SUPERSEDED
	6701	27761-78001	DIAPHRAGM	1	1	OP SUPER CUSTOM P-DX	1069				
	6801	27762-78001	CLAMP	1	1	OP SUPER CUSTOM P-DX	1069				
	6901	27771-E0100	BRACKET	1	1	OP SUPER CUSTOM P-DX	1069				
	7001	27763-E0100	ASSY-SWITCH VACUUM	1	1	OP SUPER CUSTOM P-DX	1069				
*	7101	08310-61610	SCREW	5	50	OP SUPER CUSTOM P-DX	1069				
	02	08310-61612	SCREW	5	50	OP SUPER CUSTOM P-DX	1069		Y	N	08310-61610
	7201	08915-13610	WASHER-PLAIN M6	5	50	OP SUPER CUSTOM P-DX	1069				
	7301	08915-43610	WASHER SPRING M6	5	50	OP SUPER CUSTOM P-DX	1069				
	7401	27765-E0600	HOSE-VACUUM M	1	1	OP SUPER CUSTOM P-DX	1069				
	7501	27766-E0100	HOSE-VACUUM D	1	1	OP SUPER CUSTOM P-DX	1069				
	7601	27614-78200	PLUG-CONNECTOR	1	5	OP SUPER CUSTOM P-DX	1069				
	7701	27089-E4100	PLUG-CONNECTOR	1		OP SUPER CUSTOM P-DX	1069				
	7801	27614-E3000	PLUG-CONNECTOR	1	5	OP SUPER CUSTOM P-DX	1069				
*	7901	27614-E3001	PLUG-CONNECTOR	1		OP SUPER CUSTOM P-DX	1069				
	02	27614-E3002	PLUG-CONNECTOR	1	5	OP SUPER CUSTOM P-DX	1069		Y	N	27614-E3001

NOTE:

© 1972 NISSAN MOTOR CO., LTD.

PRINTED IN JAPAN

CAR COOLER (L24, L20(A) & L23 TRUNK TYPE)-SEDAN-

S	KEY NO.	PART NO.	DESCRIPTION	Q'TY	UNIT PKG FOR DIST.	APPLIED MODEL	APPLIED DATE FROM	APPLIED DATE UP TO	ICA N	ICA F	SUPERSEDED
	8001	54039-73000	SPACER-FRONT COIL SPRING	2	5	OP SUPER CUSTOM P-DX	1069				
	8101	00911-14410	NUT-HEX	2	50	OP SUPER CUSTOM P-DX	1069				
	8201	27787-78001	KIT-INSULATOR FLOOR	1	1	OP SUPER CUSTOM P-DX	1069				
	8301	74925-78002	ASSY-INSULATOR FLOOR FR RH	1	1	OP SUPER CUSTOM P-DX	1069				
	8401	74926-78002	ASSY-INSULATOR FLOOR FR LH	1	1	OP SUPER CUSTOM	1069				
	8501	74927-78001	ASSY-INSULATOR FLOOR RR RH	1	1	OP SUPER CUSTOM	1069				
	8601	74928-78001	ASSY-INSULATOR FLOOR RR LH	1	1	OP SUPER CUSTOM P-DX	1069				
	8701	74945-65000	FASTENER-DUARBLE DOT	12	10	OP SUPER CUSTOM P-DX	1069				
*	8801	17030-E3225	KIT-PUMP ELECTRIC FUEL	1	1	OP SUPER CUSTOM P-DX	1069				
	8901	10117-E0100	LABEL-FUEL PUMP	1	10	OP SUPER CUSTOM P-DX	1069				
*	9001	17020-E0111	ASSY-PUMP FUEL W/BRACKET	1	1	OP SUPER CUSTOM	1069		Y	N	17020-E0111
	02	17010-E0111	ASSY-PUMP FUEL W/BRACKET	1	1	OP SUPER CUSTOM	1069				
	9101	16420-E3020	COVER-PLATE FUEL PUMP	1	1	OP SUPER CUSTOM	1069				
*	9201	17099-E3011	GASKET-FUEL PUMP	1	10	OP SUPER CUSTOM P-DX	1069				
	02	17099-E3012	GASKET-FUEL PUMP	1	10	OP SUPER CUSTOM P-DX	1069		Y	N	17099-E3011
	9301	14842-B2001	BOLT-HEX M8X1.2	3	10	OP SUPER CUSTOM P-DX	1069				
	9401	08915-13810	WASHER-SPRING	3	50	OP SUPER CUSTOM P-DX	1069				

NOTE:

© 1972 NISSAN MOTOR CO., LTD.

REVISED: DECEMBER, 1972
PRINTED IN JAPAN

CAR COOLER (L24, L20(A) & L23 TRUNK TYPE)-SEDAN-

S	KEY NO.	PART NO.	DESCRIPTION	Q'TY	UNIT PKG FOR DIST.	APPLIED MODEL	APPLIED DATE FROM	APPLIED DATE UP TO	ICA N	ICA F	SUPERSEDED
	9501	17525-78000	HOSE-FLEXIBLE	2	2	OP SUPER CUSTOM P-DX	1069				
	02	17517-89901	HOSE-FLEXIBLE	2		OP SUPER CUSTOM P-DX	1069				
	9601	24335-E0100	CABLE-FUEL PUMP	1	1	OP SUPER CUSTOM P-DX	1069				

NOTE:

© 1972 NISSAN MOTOR CO., LTD.

PRINTED IN JAPAN

NOTE

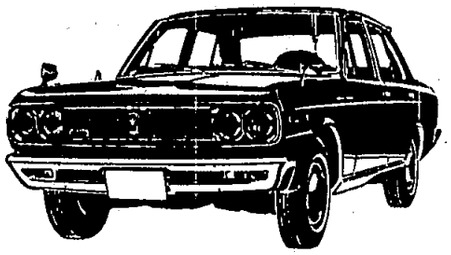

NISSAN MOTOR CO., LTD.

Printed in Japan

NOTE

Printed in Japan

NISSAN MOTOR CO., LTD.

CAR COOLER (J20 TRUNK TYPE) -SEDAN-

1. Kit-car cooler trunk type (includes 3, 42)
3. Comp.-auxiliary parts for cooler "A" (includes 5~41)

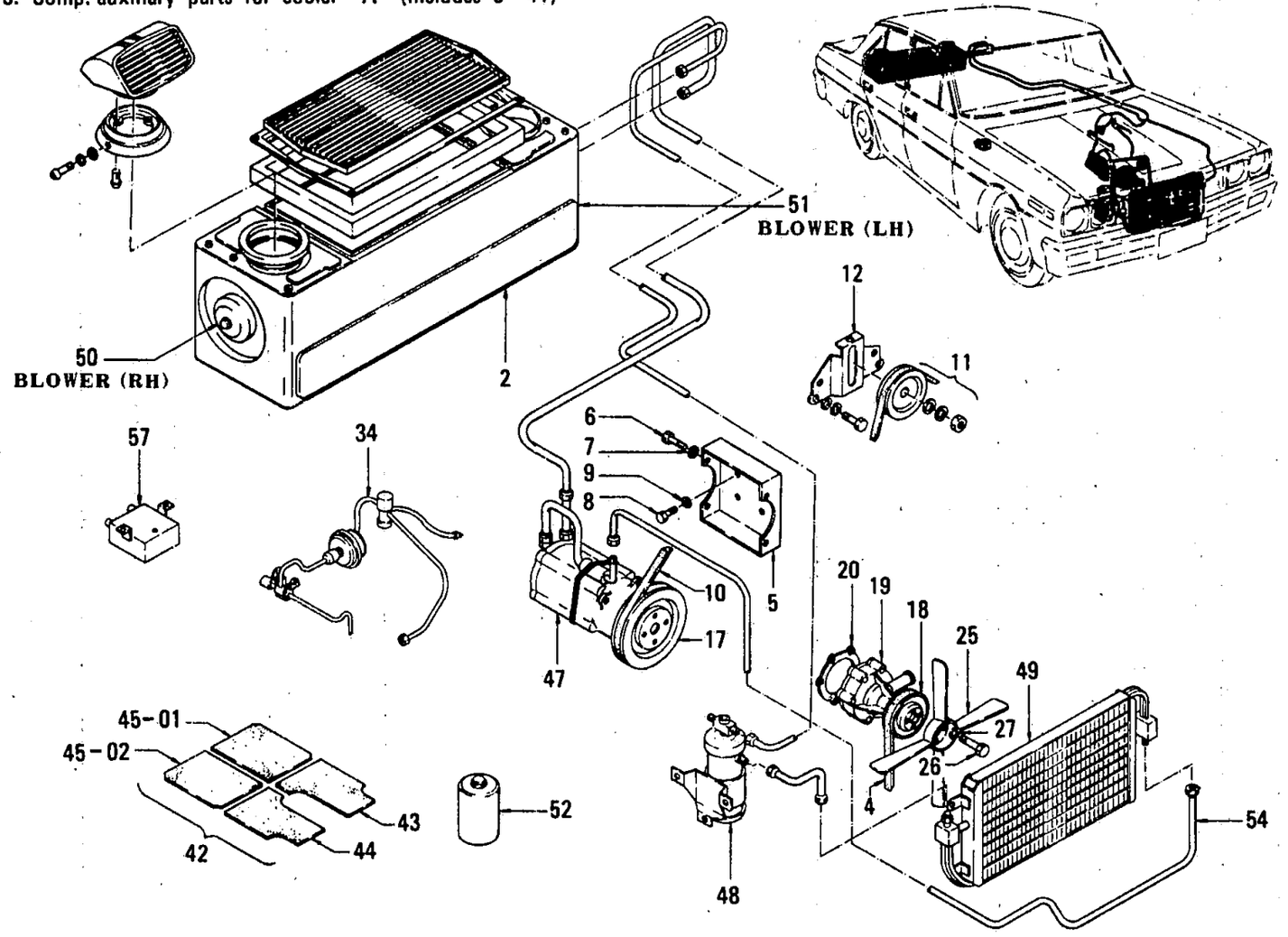

© 1972 NISSAN MOTOR CO., LTD.

REVISED: DECEMBER, 1972

PRINTED IN JAPAN

CAR COOLER (J20 TRUNK TYPE) -SEDAN-

S	KEY NO.	PART NO.	DESCRIPTION	Q'TY	UNIT PKG FOR DIST.	APPLIED MODEL	APPLIED DATE FROM	APPLIED DATE UP TO	ICA N	ICA F	SUPERSEDED
	101	27120-E0200	KIT-CAR COOLER TRUNK TYPE (HITACHI)	1		OP J20 R DRIVE		0969			
	201	27120-E0200	COMP-CAR COOLER TRUNK TYPE	1		OP J20 R DRIVE		0969			
	02	27120-E0200	COMP-CAR COOLER TRUNK TYPE	1		OP J20 L DRIVE		0969			
	301	27820-E0200	COMP-AUXILTIARY PARTS FOR COOLER 'A'	1		OP J20		0969			
	401	21067-10800	BELT-FAN	1	1	OP J20		0969			
	501	11910-78000	BRACKET-COMPRESSOR	1	1	OP J20		0969			
	601	00134-52010	BOLT-HEX 5/16-24 UNF	4	50	OP J20		0969			
	701	00915-21510	WASHER-SPRING 5/16	4	50	OP J20		0969			
	801	00124-51610	BOLT-HEX 5/16-24 UNF	4	50	OP J20		0969			
	901	00915-21510	WASHER-SPRING 5/16	4	50	OP J20		0969			
*	1001	11920-78010	BELT-COMPRESSOR	1	1	OP J20		0969			
	02	11920-78015	BELT-COMPRESSOR	1	1	OP J20		0969	Y	N	11920-78010
	1101	11925-78000	ASSY-PULLEY IDLER	1	1	OP J20		0969			
	1201	11935-78010	BRACKET-PULLEY COMPRESSOR	1	1	OP J20		0969			
	1301	11937-78010	JOINT-SEAT BRACKET IDLER RULLEY	1	10	OP J20		0969			
	1401	00111-54810	BOLT-HEX 5/16-18 UNC	3	50	OP J20		0969			
	1501	11062-30000	JOINT-SEAT WATER OUTLET	1	50	OP J20		0969			
	1601	11055-10600	STUD-CYLINDER HEAD	1	10	OP J20		0969			
	1701	12307-78000	PULLEY-CRANKSHAFT COMPRESSOR	1	1	OP J20		0969			
	1801	12305-61201	PULLEY-CRANKSHAFT FAN	1	1	OP J20		0969			
*	1901	21010-69100	ASSY-WATER PUMP WITH F/C	1	1	OP J20		0969			

NOTE:

© 1972 NISSAN MOTOR CO., LTD.

PRINTED IN JAPAN

CAR COOLER (J20 TRUNK TYPE) -SEDAN-

S	KEY NO.	PART NO.	DESCRIPTION	QTY	UNIT PKG FOR DIST.	APPLIED MODEL	APPLIED DATE FROM	APPLIED DATE UP TO	ICA N	ICA F	SUPERSEDED
	1902	- 21010-69126	ASSY-WATER PUMP WITH F/C	1		OP J20		0969	Y	N	21010-69100
	2001	- 21074-73000	GASKET-WATER PUMP	1	10	OP J20		0969			
	2101	- 00114-53510	BOLT-5/16-24 UNF	1	50	OP J20		0969			
	2201	- 00915-11510	WASHER-SPRING	1	50	OP J20		0969			
	2301	- 00114-53510	BOLT-5/16-24 UNF	2	50	OP J20		0969			
	2401	- 00915-11510	WASHER-SPRING	2	50	OP J20		0969			
	2501	- 21060-78000	ASSY-FAN SPIDER	1	1	OP J20		0969			
	2601	- 00124-42210	BOLT-1/4-28 UNF	4	50	OP J20		0969			
	2701	- 00915-11410	WASHER-SPRING 1/4	4	50	OP J20		0969			
	2801	- 23174-73010	BAR-ADVUST ALTERNATOR	1	10	OP J20		0969			
	2901	- 00124-52510	BOLT-HEX 24 UNF	1	50	OP J20		0969			
*	02	- 37120-83000	BOLT-HEX PROPELLER SHAFT	1	10	OP J20		0969			
	3001	- 00915-21510	WASHER-SPRING 5/16	1	50	OP J20		0969			
	3101	- 11714-78000	SPACER-ALTERNATOR	1	10	OP J20		0969			
	3201	- 11713-21000	SHIM	3	10	OP J20		0969			
	3301	- 11712-78000	BOLT-BRACKET TO ALTERNATOR	1	10	OP J20		0969			
	3401	- 27760-E0225	KIT-FAST IDLE CONTROL	1	1	OP J20		0969			
*	3501	- 15208-65002	ASSY-OIL FILTER	1	1	OP J20		0969			
*	02	- 15208-65010	ASSY-OIL FILTER	1	1	OP J20		0969	Y	Y	15208-65002
	03	- 15208-65011	ASSY-OIL FILTER	1	1	OP J20		0969	Y	N	15208-65010
	3601	- 15237-78000	BRACKET-OIL FILTER	1	1	OP J20		0969			
*	3701	- 15239-10600	GASKET-OIL FILTER	1	10	OP J20		0969			
	02	- 15239-83400	GASKET-OIL FILTER	1	10	OP J20		0969	Y	N	15239-10600

NOTE:

© 1972 NISSAN MOTOR CO., LTD.

REVISED: DECEMBER, 1972
PRINTED IN JAPAN

CAR COOLER (J20 TRUNK TYPE) -SEDAN-

S	KEY NO.	PART NO.	DESCRIPTION	Q'TY	UNIT PKG FOR DIST.	APPLIED MODEL	APPLIED DATE FROM	APPLIED DATE UP TO	ICA N	ICA F	SUPERSEDED
	3801	00214-62210	STAD-BOLT 3/8-24 UNF	2	50	OP J20		0969			
	3901	00911-14610	NUT-HEX 3/8-24 UNF	2	50	OP J20		0969			
	4001	22431-10560	SPARK-COAD CLAMP B	1	10	OP J20		0969			
●	4101	17030-E0200	KIT-FUEL PUMP ELECTRIC	1	1	OP J20		0969			
	02	17010-E0111	KIT-FUEL PUMP ELECTRIC	1	1	OP J20			C	N	17030-E0200
	4201	27767-78001	KIT-INSULATOR FLOOR	1	1	OP J20		0969			
	4301	74925-78002	ASSY-INSULATOR FLOOR FRONT RH	1	1	OP J20		0969			
	02	74920-E0111	FELT-FLOOR FRONT RH	1		OP J20		0969	Y	Y	74925-78002
	4401	74926-78002	ASSY-INSULATOR FLOOR FRONT LH	1	1	OP J20		0969			
	4501	74927-78001	ASSY-INSULATOR FLOOR REAR RH	1	1	OP J20		0969			
	02	74928-78001	ASSY-INSULATOR FLOOR REAR LH	1	1	OP J20		0969			
	4601	74945-65000	FASTENER-DURABLE DOT	12	10	OP J20		0969			
	4701	27630-65001	ASSY-COMPRESSOR	1	1	OP J20		0969			
	4801	27640-E0100	TANK-LIQID	1	1	OP J20		0969			
	4901	27650-E0100	ASSY-CONDENSER	1	1	OP J20		0969			
	5001	27741-E0100	BLOWER RH	1		OP J20		0969			
	5101	27742-E0100	BLOWER LH	1		OP J20		0969			
	5201	27706-65000	REFRIGERANT	1	1	OP J20		0969			
	5301	27727-E0100	THERMOSTAT	1	1	OP J20		0969			
	5401	27687-E0101	HOSE-FEXIBLE PD	1	5	OP J20		0969			
	5501	27727-F0200	THERMISTOR	1	1	OP J20		0969			
●	5601	27728-F0200	RELAY-THERMO	1	1	OP J20		0969			

NOTE:

© 1972 NISSAN MOTOR CO., LTD.

PRINTED IN JAPAN

CAR COOLER (J20 TRUNK TYPE) -SEDAN-

S	KEY NO.	PART NO.	DESCRIPTION	Q'TY	UNIT PKG FOR DIST.	APPLIED MODEL	APPLIED DATE FROM	APPLIED DATE UP TO	ICA N	ICA F	SUPERSEDED
	5701	27715-E0100	SWITCH-CONTROL	1	1	OP J20		0969			

NOTE:

© 1972 NISSAN MOTOR CO., LTD.

PRINTED IN JAPAN

NOTE

Printed in Japan

NISSAN MOTOR CO., LTD.

CAR COOLER (H20 TRUNK TYPE) -SEDAN-

1. Kit-car cooler trunk type (includes 2, 33)
2. Comp.-auxiliary parts cooler "A" (includes 3~32)

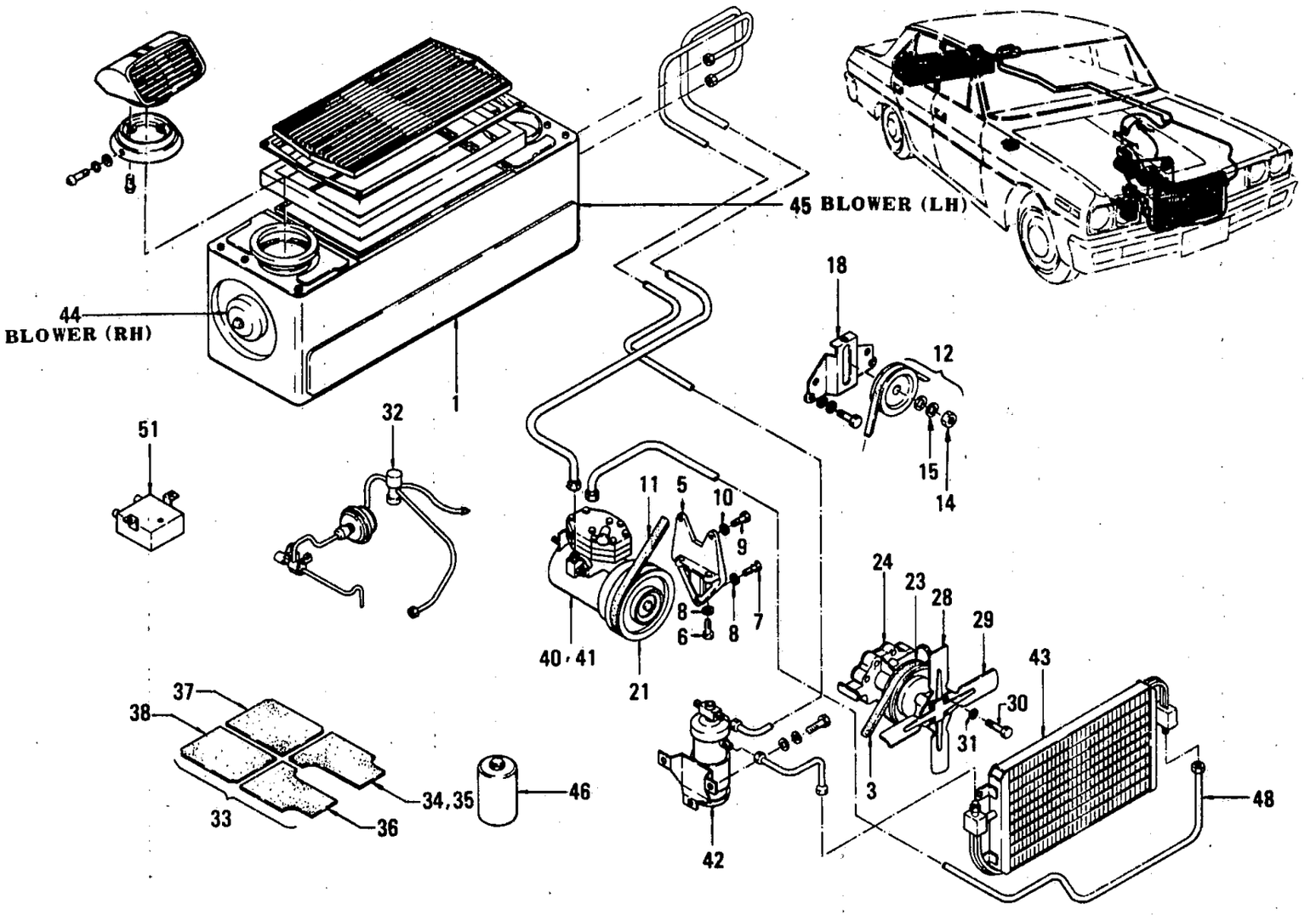

© 1972 NISSAN MOTOR CO., LTD.

REVISED: DECEMBER, 1972

PRINTED IN JAPAN

CAR COOLER (H20 TRUNK TYPE) -SEDAN-

S	KEY NO.	PART NO.	DESCRIPTION	Q'TY	UNIT PKG FOR DIST.	APPLIED MODEL	APPLIED DATE FROM	APPLIED DATE UP TO	ICA N	ICA F	SUPERSEDED
	101	27700-E0700	KIT-CAR COOLER TRUNK TYPE (HITACHI)	1	1	OP H20 R DRIVE		0969			
	02	27120-E0700	COMP-CAR COOLER TRUNK TYPE	1	1	OP H20 R DRIVE		0969			
	201	27820-E0700	COMP-AUXILIARY PARTS FOR COOLER 'A'	1	1	OP H20 R DRIVE		0969			
	301	21067-38700	BELT-FAN	1	1	OP H20 R DRIVE		0969			
	401	16528-78200	ASSY-BODY CLEANER	1		OP H20 R DRIVE		0969			
	501	11910-69200	BRACKET-COMPRESSOR	1	1	OP H20 R DRIVE		0969			
	601	08131-04210	BOLT-HEX M10-1.5	2	25	OP H20 R DRIVE		0969			
	701	08131-01810	BOLT-HEX M10-1.5	1	50	OP H20 R DRIVE		0969			
	801	08915-14010	WASHER-SPRING M10	3	50	OP H20 R DRIVE		0969			
	901	08130-82510	BOLT-HEX M8-1.25	4	25	OP H20 R DRIVE		0969			
	1001	08915-13810	WASHER-SPRING M8	4	50	OP H20 R DRIVE		0969			
	1101	11920-69200	BELT-COMPRESSOR	1	1	OP H20 R DRIVE		0969			
*	02	11920-E0700	BELT-COMPRESSOR	1	1	OP H20 R DRIVE		0969	C	N	11920-69200
	03	11920-E0705	BELT-COMPRESSOR	1	1	OP H20 R DRIVE		0969	Y	N	11920-E0700
	1201	11925-69200	ASSY-PULLEY IDLER	1	1	OP H20 R DRIVE		0969			
	1301	11928-69200	BOLT-ADJUST IDLER PULLEY	1	1	OP H20 R DRIVE		0969			
	1401	08911-34210	NUT-HEX M12-1.25	1	50	OP H20 R DRIVE		0969			
	1501	08915-14210	WASHER-SPRING M12	1	50	OP H20 R DRIVE		0969			
	1601	08911-20810	NUT-HEX M8-1.25	1	50	OP H20 R DRIVE		0969			
	1701	08915-13810	WASHER-SPRING M8	1	50	OP H20 R DRIVE		0969			
	1801	11935-69200	BRACKET-PULLEY IDLER	1	1	OP H20 R DRIVE		0969			
	1901	11937-66000	JOINT-SEAT BRACKET PULLEY IDLER	1	5	OP H20 R DRIVE		0969			

NOTE:

© 1972 NISSAN MOTOR CO., LTD.

PRINTED IN JAPAN

CAR COOLER (H20 TRUNK TYPE)-SEDAN-

S	KEY NO.	PART NO.	DESCRIPTION	Q'TY	UNIT PKG FOR DIST.	APPLIED MODEL	APPLIED DATE FROM	APPLIED DATE UP TO	ICA N	ICA F	SUPERSEDED
	2001	08120-83010	BOLT-HEX M8-1.25	3	50	OP H20 R DRIVE		0969			
	2101	12303-78200	PULLEY-CRANKSHAFT	1	1	OP H20 R DRIVE		0969			
	2201	17030-E0705	KIT-FUEL PUMP ELECTRIC	1	1	OP H20 R DRIVE		0969			
	2301	21051-66000	PULLEY-FAN	1	1	OP H20 R DRIVE		0969			
•	2401	21082-78200	ASSY-WATER PUMP WITH FLUID COUPLING	1	1	OP H20 R DRIVE		0969			
	02	21082-P0525	ASSY-WATER PUMP WITH FLUID COUPLING	1	1	OP H20 R DRIVE		0969	Y	N	21082-78200
	2501	08130-61810	BOLT-HEX M6	4	50	OP H20 R DRIVE		0969			
	2601	08915-13610	WASHER-SPRING M6	4	50	OP H20 R DRIVE		0969			
	2701	08915-43610	WASHER-PLAIN M6	4	50	OP H20 R DRIVE		0969			
	2801	21060-61202	ASSY-FAN SPIDER REAR	1	1	OP H20 R DRIVE		0969			
	2901	21060-61203	ASSY-FAN SPIDER FRONT	1	1	OP H20 R DRIVE		0969			
	3001	08130-62510	BOLT-HEX M6	4	50	OP H20 R DRIVE		0969			
	3101	08915-13610	WASHER SPRING	4	50	OP H20 R DRIVE		0969			
	3201	27760-E0725	KIT-FAST IDLE CONTROL	1	1	OP H20 R DRIVE		0969	Y	Y	27760-E0700
	3301	27767-78001	KIT-INSULATOR FLOOR	1	1	OP H20 R DRIVE		0969			
	3401	74925-78002	ASSY-INSULATOR FLOOR FRONT RH	1	1	OP H20 R DRIVE		0969			
	3501	74920-E0111	FELT-FLOOR FRONT RH	1		OP H20 R DRIVE		0969	Y	Y	74925-78002
	3601	74926-78002	ASSY-INSULATOR FLOOR FRONT LH	1	1	OP H20 R DRIVE		0969			
	3701	74927-78001	ASSY-INSULATOR FLOOR REAR RH	1	1	OP H20 R DRIVE		0969			
	3801	74928-78001	ASSY-INSULATOR FLOOR REAR LH	1	1	OP H20 R DRIVE		0969			
	3901	74945-65000	FASTENER-DURABLE DOT	12	10	OP H20 R DRIVE		0969			

NOTE:

© 1972 NISSAN MOTOR CO., LTD.

REVISED: DECEMBER, 1972
PRINTED IN JAPAN

CAR COOLER (H20 TRUNK TYPE)-SEDAN-

S	KEY NO.	PART NO.	DESCRIPTION	Q'TY	UNIT PKG FOR DIST.	APPLIED MODEL	APPLIED DATE FROM	APPLIED DATE UP TO	ICA N	ICA F	SUPERSEDED
	4001	27630-73625	KIT-COMPPESSOR	1		OP H20 R DRIVE		0969			
	4101	27630-73600	ASSY-COMPRESSOR	1		OP H20 R DRIVE		0969			
	4201	27640-E0100	TANK-LIQUID	1	1	OP H20 R DRIVE		0969			
	4301	27650-E0100	ASSY-CONDENSER	1	1	OP H20 R DRIVE		0969			
	4401	27741-E0100	BLOWER RH	1		OP H20 R DRIVE		0969			
	4501	27742-E0100	BLOWER LH	1		OP H20 R DRIVE		0969			
	4601	27706-65000	REFRIGERANT	1	1	OP H20 R DRIVE		0969			
	4701	27727-E0100	THERMOSTAT	1	1	OP H20 R DRIVE		0969			
	4801	27685-E0700	HOSE-FLEXIBLE	1		OP H20 R DRIVE		0969			
	4901	27727-F0200	THERMISTER	1	1	OP H20 R DRIVE		0969			
*	5001	27728-F0200	LELAY-THERMO	1	1	OP H20 R DRIVE		0969			
	5101	27715-E0100	SWITCH-CONTROL	1	1	OP H20 R DRIVE		0969			

NOTE:

© 1972 NISSAN MOTOR CO., LTD.

PRINTED IN JAPAN

NOTE

NISSAN MOTOR CO., LTD.

Printed in Japan

NOTE

Printed in Japan

NISSAN MOTOR CO., LTD.

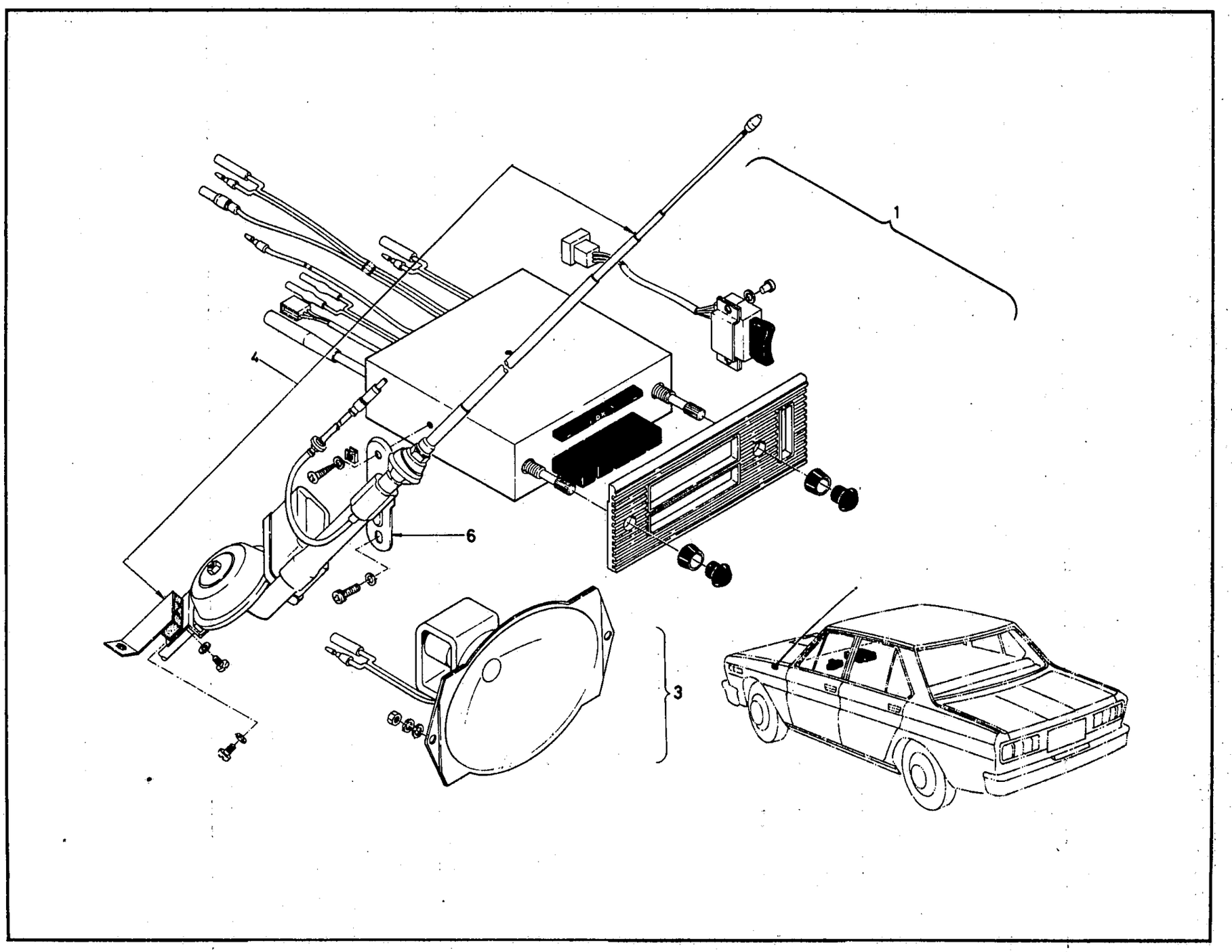

ILLUSTRATION **147**

© 1972 NISSAN MOTOR CO., LTD.

REVISED: DECEMBER, 1972

PRINTED IN JAPAN

C

S	KEY NO.	PART NO.	DESCRIPTION	QTY	UNIT PKG FOR DIST.	APPLIED MODEL	APPLIED DATE FROM	APPLIED DATE UP TO	ICA N	ICA F	SUPERSEDED
	101	- 27910-E0227	KIT-RADIO ASSY AM ONLY (HITACHI)	1		OP STD		0969			
	02	- 27910-E0228	KIT-RADIO ASSY AM-FM ONE SPEAKER(HITACHI)	1		OP ALL		0969			
	03	- 27910-E1225	KIT-RADIO ASSY AM ONLY (CLARION)	1		OP ALL		0969			
	04	- 27910-E0226	KIT-RADIO ASSY AM-FM ONE SPEAKER(CLARION)	1		OP ALL					
	201	- 27910-E3200	ASSY-RADIO RECEIVER AM WITH REAR SPEAKER	1		OP SUPER R DRIVE	1069				
	02	- 27910-E3300	ASSY-RADIO RECEIVER AM WITH REAR SPEAKER	1		OP SUPER L DRIVE	1069				
	03	- 27910-E3000	ASSY-RADIO RECEIVER AM LESS REAR SPEAKER	1		OP CUSTOM R DRIVE	1069				
	04	- 27910-E3600	ASSY-RADIO RECEIVER AM REAR TUNING	1		OP CUSTOM L DRIVE	1069				
	05	- 27910-E0202	ASSY-RADIO RECEIVER AM REAR SPEAKER LESS	1	1	OP R DRIVE EXC SUPER CUSTOM	1069				
	06	- 27910-E1200	ASSY-RADIO RECEIVER AM REAR SPEAKER LESS	1	1	OP L DRIVE SUPER CUSTOM	1069				
	301	- 27930-E0201	SET-SPEAKER	1	1	OP ALL					
	02	- 27930-E0101	SET-SPEAKER REAR	1	1	OP SUPER	1069				
	401	- 27960-E0200	SET-ANTENNA	1	1	OP ALL					
	501	- 27984-89900	CONDENSER TYPE C	1	5	OP ALL					
	601	- 27925-E0100	SET-ATTACHMENT RADIO	1	1	OP ALL					

NOTE:

© 1972 NISSAN MOTOR CO., LTD.

PRINTED IN JAPAN

NOTE

NISSAN MOTOR CO., LTD.

Printed in Japan

NOTE

Printed in Japan

NISSAN MOTOR CO., LTD.

BATTERY

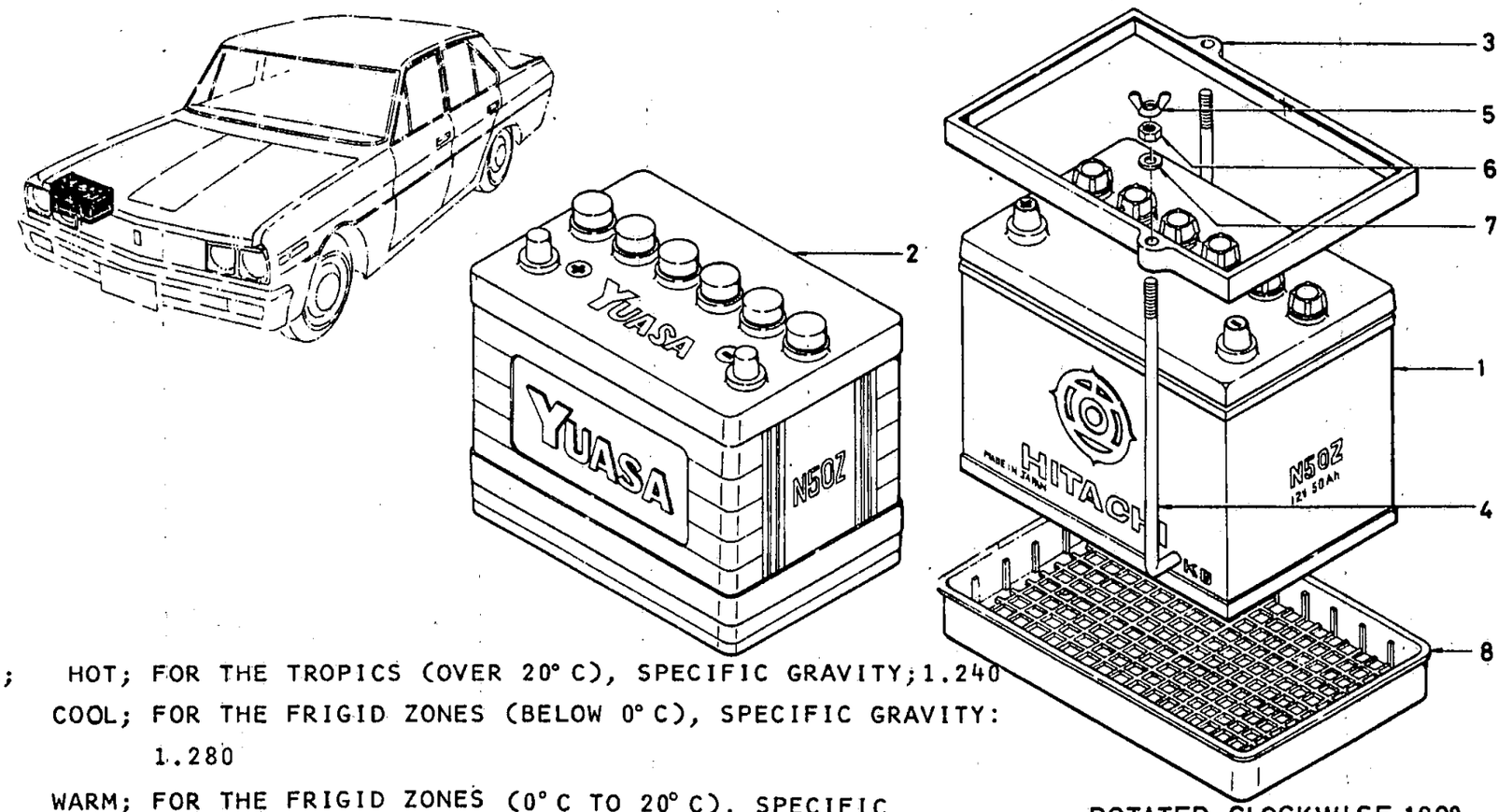

ROTATED CLOCKWISE 180°

NOTE; HOT; FOR THE TROPICS (OVER 20° C), SPECIFIC GRAVITY; 1.240

COOL; FOR THE FRIGID ZONES (BELOW 0° C), SPECIFIC GRAVITY: 1.280

WARM; FOR THE FRIGID ZONES (0° C TO 20° C), SPECIFIC GRAVITY 1.260

DRY: THESE BATTERIES DO NOT HAVE ELECTROLYTE IN THEM. WHEN YOU NEED THE ELECTROLYTE, ORDER IT ACCORDING TO THE FOLLOWING LIST. OTHERWISE, THE BATTERY WITHOUT THE ELECTROLYTE IS TO BE SENT TO YOU. IN THIS CASE, IT IS UNNECESSARY TO BE CHARGED AFTER YOU POUR IT INTO THE BATTERY

ELECTROLYTE	HOT	WARM	COLD
FOR 40A (3 LITER)	24415-01303	24416-01303	24417-01303
FOR 50A (4 LITER)	24415-01304	24416-01304	34417-01304

ILLUSTRATION **148**

© 1972 NISSAN MOTOR CO., LTD.

REVISED: DECEMBER, 1972

PRINTED IN JAPAN

BATTERY

S	KEY NO.	PART NO.	DESCRIPTION	QTY	UNIT PKG FOR DIST.	APPLIED MODEL	APPLIED DATE FROM	APPLIED DATE UP TO	ICA N	ICA F	SUPERSEDED
	101	24410-03021	BATTERY(12V-50AH) HOT DRY USE FIT ONE	1	1	ALL			Y	N	24410-03025
	02	24410-03023	BATTERY(12V-50AH) COLD DRY USE FIT ONE	1	1	ALL					
*	03	24410-03025	BATTERY(12V-50AH)WARM DRY USE FIT ONE	1	1	ALL					
#	201	24410-38301	BATTERY(12V-60AH) HOT DRY USE FIT ONE	1		OPTION					
#	02	24410-38304	BATTERY(12V-60AH) COLD DRY USE FIT ONE	1		OPTION					
	03	24410-38300	BATTERY(12V-60AH) WARM DRY USE FIT ONE	1	1	OPTION					
	301	24420-14800	ASSY-FRAME BATTERY FIX	1	1	ALL					
	401	24425-73000	ASSY-BAR BATTERY FIX	1	1	ALL					
*	501	00913-44400	NUT-WING 1/4-28	2		ALL					
	02	00913-44410	NUT-WING 1/4-28	2		ALL	1069		Y	N	00913-44400
	601	00911-14410	NUT	2	50	ALL					
	701	00915-51410	WASHER-PLAIN	2	50	ALL					
	801	24428-E0101	TRAY-BATTERY	1	1	ALL					

NOTE:

© 1972 NISSAN MOTOR CO., LTD.

PRINTED IN JAPAN

NOTE

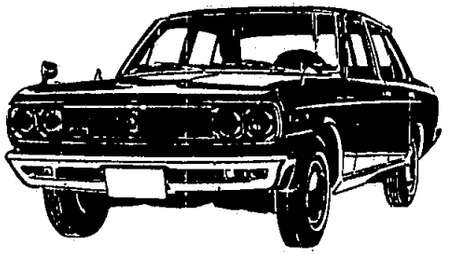

NOTE

Printed in Japan

NISSAN MOTOR CO., LTD.

WINDSHIELD WIPER, MOTOR & WIPER BLADE

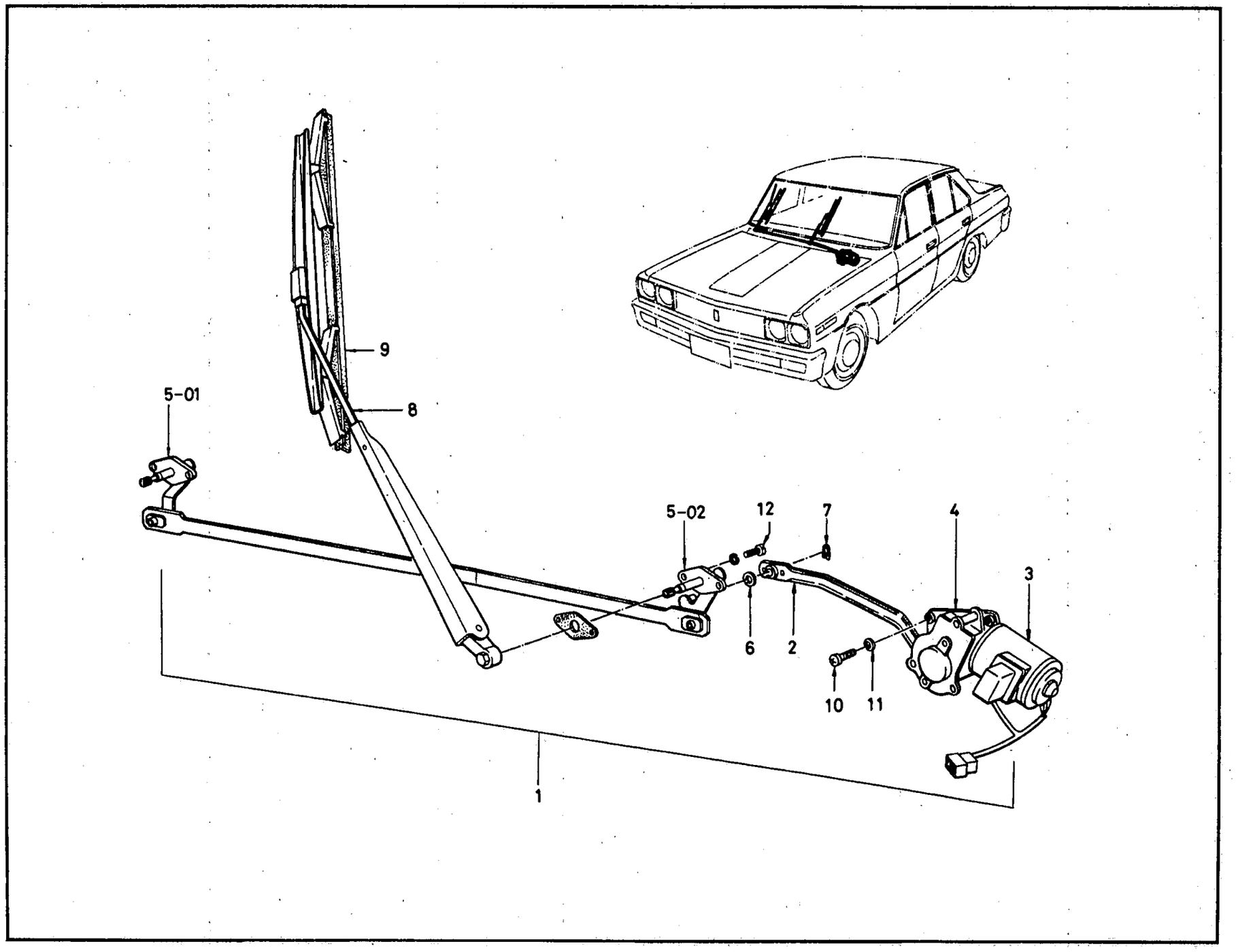

ILLUSTRATION **149**

© 1972 NISSAN MOTOR CO., LTD.

REVISED: DECEMBER, 1972

PRINTED IN JAPAN

WINDSHIELD WIPER, MOTOR & WIPER BLADE

S	KEY NO.	PART NO.	DESCRIPTION	Q'TY	UNIT PKG FOR DIST.	APPLIED MODEL	APPLIED DATE FROM	APPLIED DATE UP TO	ICA N	ICA F	SUPERSEDED
	101	28800-E0100	ASSY-DRIVE WINDSHIELD WIPER	1	1	R DRIVER					
	02	28800-E1100	ASSY-DRIVE WINDSHIELD WIPER	1	1	L DRIVE					
	201	26347-E0100	ASSY-ROD CONNECTING NO,1	1	1	R DRIVE					
	02	26347-E1100	ASSY-ROD CONNECTING NO,1	1	1	L DRIVE					
	03	26348-E0100	ASSY-ROD CONNECTING NO,2	1	1	ALL					
	301	26350-E0100	ASSY-MOTOR WINDSHIELD WIPER DRIVE	1	1	R DRIVE					
	02	26350-E1100	ASSY-MOTOR WINDSHIELD WIPER DRIVE	1	1	L DRIVE					
	401	26351-E0100	ASSY-BRACKET WINDSHIELD WIPER DRIVE	1	1	ALL					
	501	28870-E0100	ASSY-PIVOT WINDSHIELD WIPER NO,1	1	1	R DRIVE					
	02	28870-E1100	ASSY-PIVOT WINDSHIELD WIPER NO,2	1	1	L DRIVE					
	03	28880-E0100	ASSY-PIVOT WINDSHIELD WIPER LH	1	1	ALL					
	601	26388-73000	WASHER-FELT	1	10	ALL					
	701	26389-73000	RING-STOP	1	10	ALL					
	801	26380-E0110	ASSY-ARM WINDSHIELD WIPER	2	1	R DRIVE					
	02	26385-E1110	ASSY-ARM WINDSHIELD WIPER	2	1	L DRIVE					
*	901	26360-21010	ASSY-BLADE WINDSHIELD WIPER NO,1	2	1	ALL					
*	02	26360-A4600	ASSY-BLADE WINDSHIELD WIPER NO,1	2	1	ALL			Y	N	26360-21010
	03	26360-A4601	ASSY-BLADE WINDSHIELD WIPER NO,1	2	1	ALL			Y	N	26360-A4600

NOTE:

© 1972 NISSAN MOTOR CO., LTD.

PRINTED IN JAPAN

WINDSHIELD WIPER, MOTOR & WIPER BLADE

S	KEY NO.	PART NO.	DESCRIPTION	Q'TY	UNIT PKG FOR DIST.	APPLIED MODEL	APPLIED DATE FROM	APPLIED DATE UP TO	ICA N	ICA F	SUPERSEDED
*	9 04	26370-69010	ASSY-BLADE WINDSHIELD WIPER NO.1 AWL BLADE	2	1	ALL					
	05	26370-A4601	ASSY-BLADE WINDSHIELD WIPER NO.1 AWL BLADE	2	1	ALL			Y	N	26370-69010
*	06	26370-69010	ASSY-BLADE WINDSHIELD WIPER NO.1 AWL BLADE	2	1	R DRIVE					
	07	26370-A4601	ASSY-BLADE WINDSHIELD WIPER NO.1 AWL BLADE	2	1	R DRIVE			Y	N	26370-69010
*	08	26375-69010	ASSY-BLADE WINDSHIELD WIPER NO.1 AWL BLADE	2	1	ALL					
*	09	26375-A4600	ASSY-BLADE WINDSHIELD WIPER NO.1 AWL BLADE	2	1	ALL			Y	N	26375-69010
	10	26375-A4601	ASSY-BLADE WINDSHIELD WIPER NO.1 AWL BLADE	2	1	ALL			Y	N	26375-A4600
*	11	26375-69010	ASSY-BLADE WINDSHIELD WIPER NO.1 AWL BLADE	2	1	L DRIVE					
*	12	26375-A4600	ASSY-BLADE WINDSHIELD WIPER NO.1 AWL BLADE	2	1	L DRIVE			Y	N	26375-69010
	13	26375-A4601	ASSY-BLADE WINDSHIELD WIPER NO.1 AWL BLADE	2	1	L DRIVE			Y	N	26375-A4600
*	10 01	00314-42010	SCREW TO ATTACH MOTER TO BRACKET	4	50	ALL					
	02	00314-42012	SCREW TO ATTACH MOTER TO BRACKET	4	50	ALL			Y	N	00314-42010
	11 01	00915-51410	WASHER-PLAIN TO ATTACH MOTOR TO BRACKET	4	50	ALL					
	12 01	00314-41814	SCREW TO ATTACH PIVOT TO BODY	4	50	ALL					

NOTE:

© 1972 NISSAN MOTOR CO., LTD.

REVISED: DECEMBER, 1972
PRINTED IN JAPAN

NOTE

Printed in Japan

NISSAN MOTOR CO., LTD.

WINDSHIELD WASHER

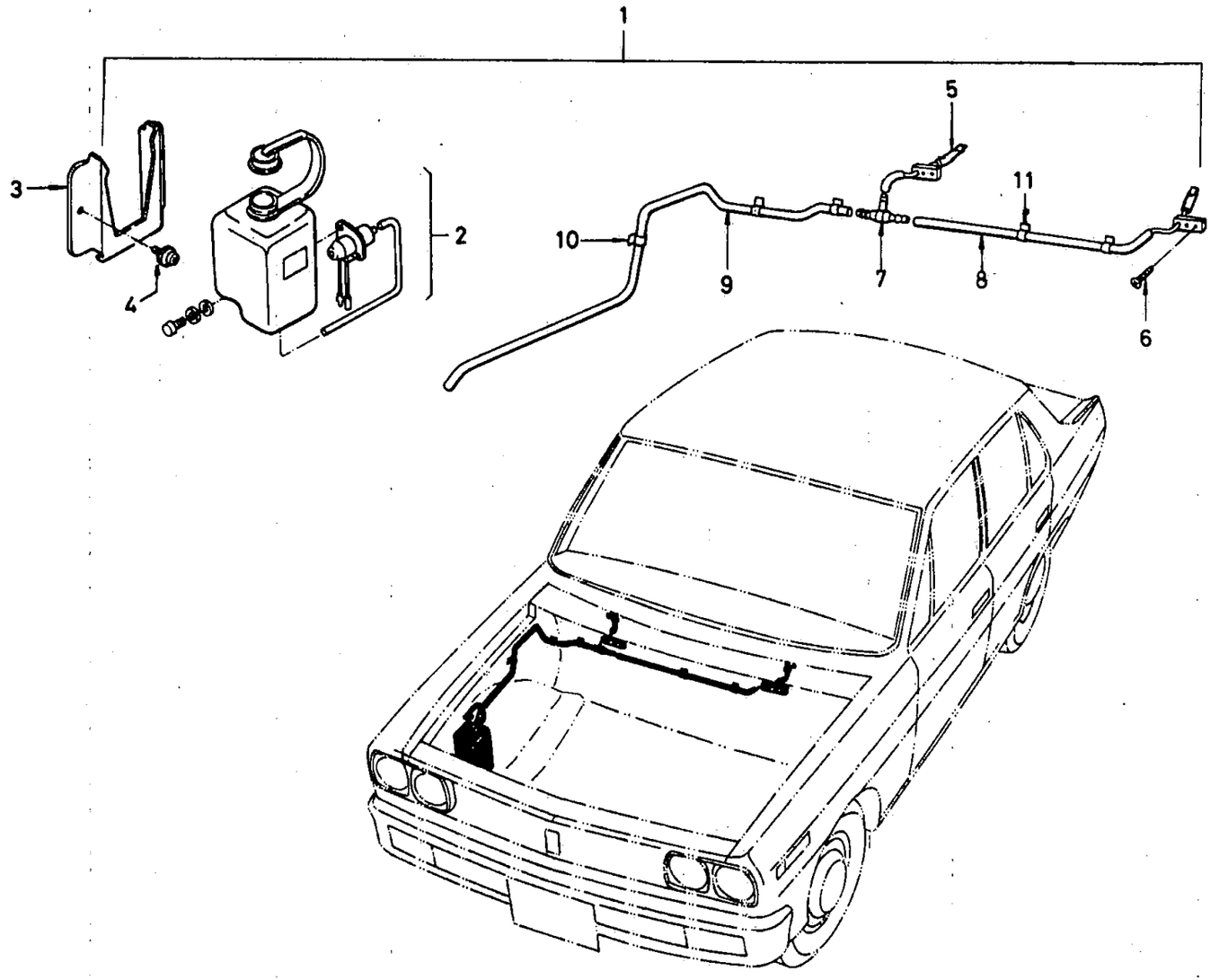

ILLUSTRATION **150**

© 1972 NISSAN MOTOR CO., LTD.

REVISED: DECEMBER, 1972

PRINTED IN JAPAN

WINDSHIELD WASHER

S	KEY NO.	PART NO.	DESCRIPTION	Q'TY	UNIT PKG FOR DIST.	APPLIED MODEL	APPLIED DATE FROM	APPLIED DATE UP TO	ICA N	ICA F	SUPERSEDED
	101	27400-E0100	KIT-WINDSHIELD WASHER	1	1	ALL		0969			
	02	27400-E0100	KIT-WINDSHIELD WASHER	1	1	STD	1009				
	03	27400-E3200	KIT-WINDSHIELD WASHER	1	1	ALL EXC STANDARD					
	201	27470-E0100	ASSY-TANK WINDSHIELD WASHER	1	1	ALL					
*	301	27450-F0100	ASSY-BRACKET WASHER TANK	1		ALL					
	401	00314-01214	SCREW	2	50	ALL					
	501	27440-E0100	ASSY-NOZZLE WINDSHIELD WASHER	2	5	ALL		0969			
	02	27440-E0100	ASSY-NOZZLE WINDSHIELD WASHER	1	5	STD	1069				
	03	27440-E3200	ASSY-NOZZLE WINDSHIELD WASHER	1	5	ALL EXC STANDARD	1069				
	601	00510-61010	SCREW-TAPPING	4	50	ALL					
*	701	27416-89900	TEE-TUBE	1	10	ALL					
	02	27416-89905	TEE-TUBE	1	10	ALL			Y	N	27416-89900
	801	27461-89903	TUBE	1		ALL					
	02	27461-89903	TUBE	1		STANDARD					
	03	27461-89940	TUBE	1		ALL EXC STANDARD					
*	901	27460-89913	TUBE	1	5	ALL					
	02	27460-89910	TUBE	1		ALL			N	N	27460-89913
	03	27460-89975	TUBE	1		ALL					
*	04	27460-89925	TUBE	1		ALL EXC STANDARD					
	05	B7460-89910	TUBE	1	1	ALL EXC STANDARD			Y	N	27460-89925
	06	27460-89935	TUBE	1	5	ALL EXC STANDARD					

NOTE:

© 1972 NISSAN MOTOR CO., LTD.

PRINTED IN JAPAN

WINDSHIELD WASHER

S	KEY NO.	PART NO.	DESCRIPTION	Q'TY	UNIT PKG FOR DIST.	APPLIED MODEL	APPLIED DATE FROM	APPLIED DATE UP TO	ICA N	ICA F	SUPERSEDED
	907	- 27460-89907	TUBE	1		STANDARD					
*	08	- 27460-89966	TUBE	1		STANDARD					
	09	- 87460-89910	TUBE	1	1	STANDARD			C	N	27460-89966
*	1001	- 24220-89903	CLIP	3	10	ALL					
	1101	- 24220-89936	CLIP	3	10	ALL			Y	N	24220-89903

NOTE:

© 1972 NISSAN MOTOR CO., LTD.

REVISED: DECEMBER, 1972
PRINTED IN JAPAN

NOTE

Printed in Japan

NISSAN MOTOR CO., LTD.

HEAD LAMP (ICHIKHO)

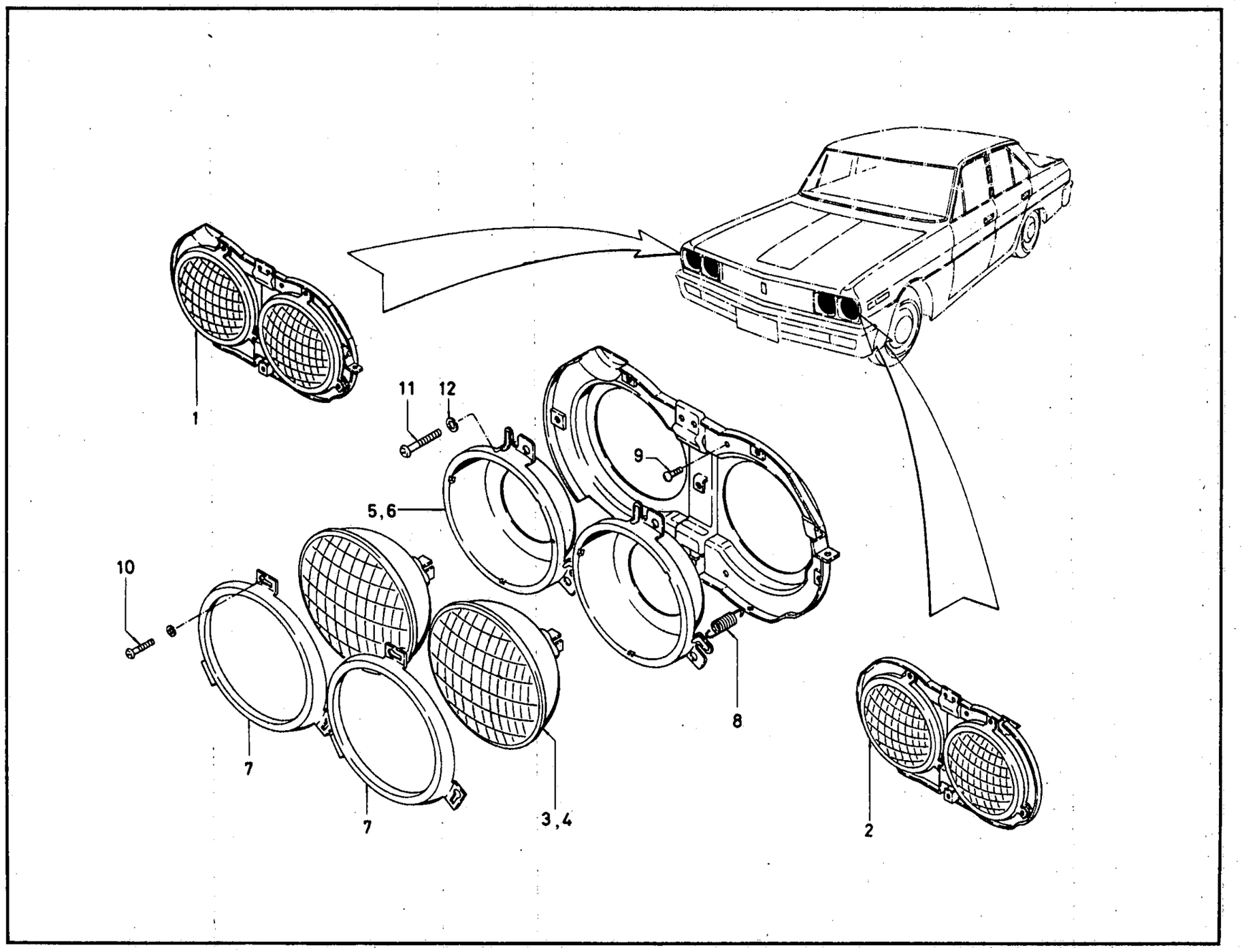

ILLUSTRATION **151**

© 1972 NISSAN MOTOR CO., LTD.

REVISED: DECEMBER, 1972

PRINTED IN JAPAN

HEAD LAMP (ICHIKHO)

S	KEY NO.	PART NO.	DESCRIPTION	Q'TY	UNIT PKG FOR DIST.	APPLIED MODEL	APPLIED DATE FROM	APPLIED DATE UP TO	ICA N	ICA F	SUPERSEDED
	1D1	26010-E0100	ASSY-LAMP HEAD RH	1	2	R DRIVE					
*	D2	26010-E1200	ASSY-LAMP HEAD RH	1	1	L DRIVE					
	D3	26010-E3300	ASSY-LAMP HEAD RH	1	1	L DRIVE	1069		Y	Y	26010-E1200
	2D1	26060-E0100	ASSY-LAMP HEAD LH	1	2	R DRIVE					
*	D2	26060-E1200	ASSY-LAMP HEAD LH	1	1	L DRIVE					
	D3	26060-E3300	ASSY-LAMP HEAD LH	1	1	L DRIVE			Y	Y	26060-E3300
*	3D1	26011-58001	UNIT-SEALED BEAM TYPE 1	1	1	ALL					
	D2	26701-89920	UNIT-SEALED BEAM TYPE 1	1		ALL			Y	N	26011-58001
	4D1	26012-58001	UNIT-SEALED BEAM TYPE 2	1	1	R DRIVE					
*	D2	26012-58501	UNIT-SEALED BEAM TYPE 2	1	1	L DRIVE					
	D3	26702-89925	UNIT-SEALED BEAM TYPE 2	1		ALL			Y	N	26012-58501
	5D1	26006-E0100	ASSY-BODY W/O UNIT RH	1		ALL					
	6D1	26056-E0100	ASSY-BODY W/O UNIT LH	1	1	ALL					
	7D1	26023-21001	RING-RETAINING LAMP UNIT	2	1	ALL					
	8D1	26024-21001	SPRING-TENSION	2	10	ALL					
	9D1	26022-58000	SCREW-ADJUST	4	10	ALL					
*	10D1	08310-40610	SCREW-CROSS M4X6	6	50	ALL					
	D2	08310-40612	SCREW-CROSS M4X6	6	50	ALL			Y	N	08310-40610
*	11D1	00314-01410	SCREW-CROSS #10x14	4	50	ALL					
	12D1	00915-11010	WASHER-SPRING LOCK #10	4	50	ALL					

NOTE:

© 1972 NISSAN MOTOR CO., LTD.

PRINTED IN JAPAN

NOTE

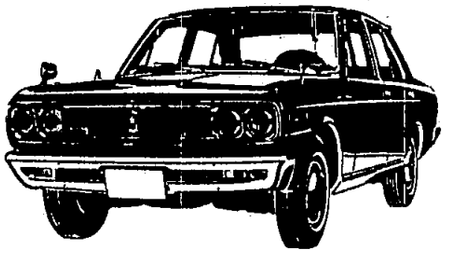

NOTE

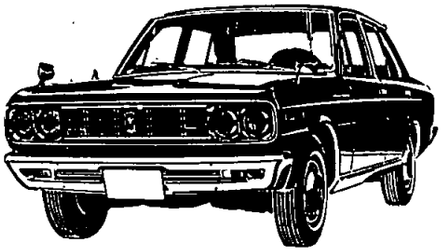

Printed in Japan

NISSAN MOTOR CO., LTD.

HEAD LAMP (KOITO)

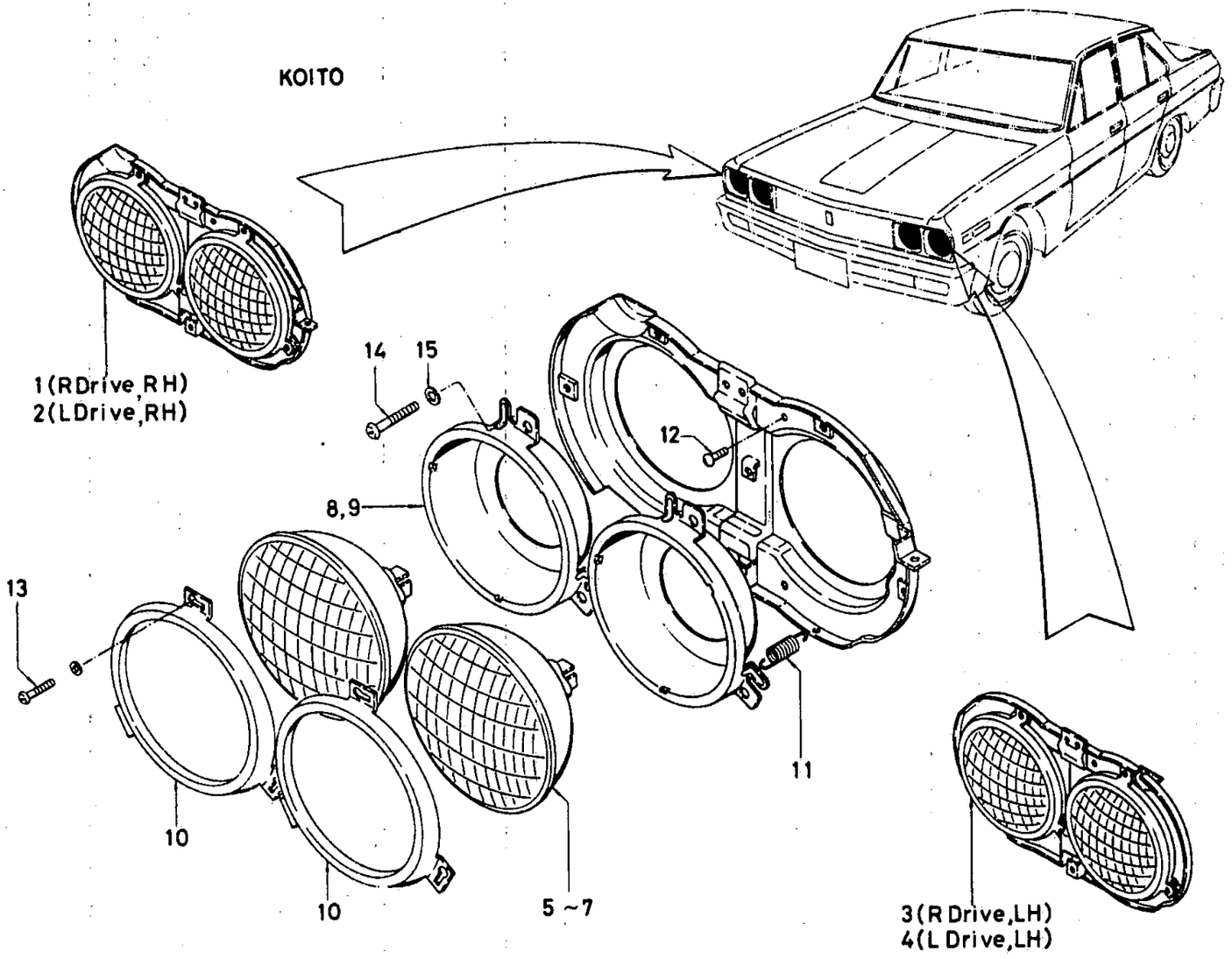

ILLUSTRATION **151 A**

© 1972 NISSAN MOTOR CO., LTD.

REVISED: DECEMBER, 1972

PRINTED IN JAPAN

NISSAN

HEAD LAMP (KOITO)

S	KEY NO.	PART NO.	DESCRIPTION	Q'TY	UNIT PKG FOR DIST.	APPLIED MODEL	APPLIED DATE FROM	APPLIED DATE UP TO	ICA N	ICA F	SUPERSEDED
	101	26010-E0111	ASSY-LAMP HEAD RH	1	1	R DRIVE					
*	201	26010-E1211	ASSY-LAMP HEAD RH	1	1	L DRIVE					
	02	26010-E3310	ASSY-LAMP HEAD RH	1		L DRIVE	1069		Y	N	26010-E1211
	301	26060-E0111	ASSY-LAMP HEAD LH	1	1	R DRIVE					
*	401	26060-E1211	ASSY-LAMP HEAD LH	1	1	L DRIVE					
	02	26060-E3310	ASSY-LAMP HEAD LH	1		R DRIVE			Y	N	26060-E1211
*	501	26011-58002	UNIT-SEALED BEAM TYPE 1	1	1	ALL					
*	02	26701-89900	UNIT-SEALED BEAM TYPE 1	1		ALL			Y	N	26011-58002
	03	26701-89910	UNIT-SEALED BEAM TYPE 1	1	1	ALL			Y	N	26701-89900
*	601	26012-14000	UNIT-SEALED BEAM TYPE 2	1	1	R DRIVE					
	02	26702-89910	UNIT-SEALED BEAM TYPE 2	1	1	R DRIVE			Y	N	26012-14000
*	701	26012-13900	UNIT-SEALED BEAM TYPE 2	1	1	L DRIVE					
	02	26701-89910	UNIT-SEALED BEAM TYPE 2	2	1	ALL			Y	N	26012-13900
*	03	26702-89905	UNIT-SEALED BEAM TYPE 2	1		L DRIVE			Y	N	26012-13900
	04	26702-89910	UNIT-SEALED BEAM TYPE 2	1	1	L DRIVE			Y	N	26702-89905
	05	26702-89915	UNIT-SEALED BEAM TYPE 2	1	1	L DRIVE			Y	N	26012-13900
	801	26006-E0111	ASSY-BODY W/O UNIT RH	1		ALL					
	901	26056-E0111	ASSY-BODY W/O UNIT LH	1	1	ALL					
	02	26056-E0111	ASSY-BODY W/O UNIT LH	1	1	Op L DRIVE					
	1001	26023-21001	RING-RETAINING LAMP UNIT	2	1	ALL					
	02	26023-21011	RING-RETAINING LAMP UNIT	2	1	Op L DRIVE					
	1101	26024-21001	SPRING-TENSION	2	10	ALL					
	02	26024-21011	SPRING-TENSION	2	10	Op L DRIVE					

NOTE:

© 1972 NISSAN MOTOR CO., LTD.

PRINTED IN JAPAN

HEAD LAMP (KOITO)

S	KEY NO.	PART NO.	DESCRIPTION	Q'TY	UNIT PKG FOR DIST.	APPLIED MODEL	APPLIED DATE FROM	APPLIED DATE UP TO	ICA N	ICA F	SUPERSEDED
	1201	26022-58000	SCREW-ADJUST	4	10	ALL					
	02	26022-01301	SCREW-ADJUST	4	10	Op L DRIVE					
*	1301	08310-40610	SCREW-CROSS	6	50	ALL					
*	02	08310-40810	SCREW-CROSS	6	50	Op L DRIVE					
	03	08310-40812	SCREW-CROSS	6	50	Op L DRIVE			Y	N	08310-40810
*	1401	00314-01410	SCREW FIXING HEAD LAMP	4	50	ALL					
*	02	00314-01410	SCREW-CROSS #10X14	4	50	Op L DRIVE					
	1501	00915-11010	WASHER-LOCK FIXING HEAD LAMP	4	50	ALL					
	02	00915-11010	WASHER-SPRING LOCK #1	4	50	Op L DRIVE					

NOTE:

PRINTED IN JAPAN

© 1972 NISSAN MOTOR CO., LTD.

NOTE

Printed in Japan

NISSAN MOTOR CO., LTD.

PARKING & TURN SIGNAL LAMP

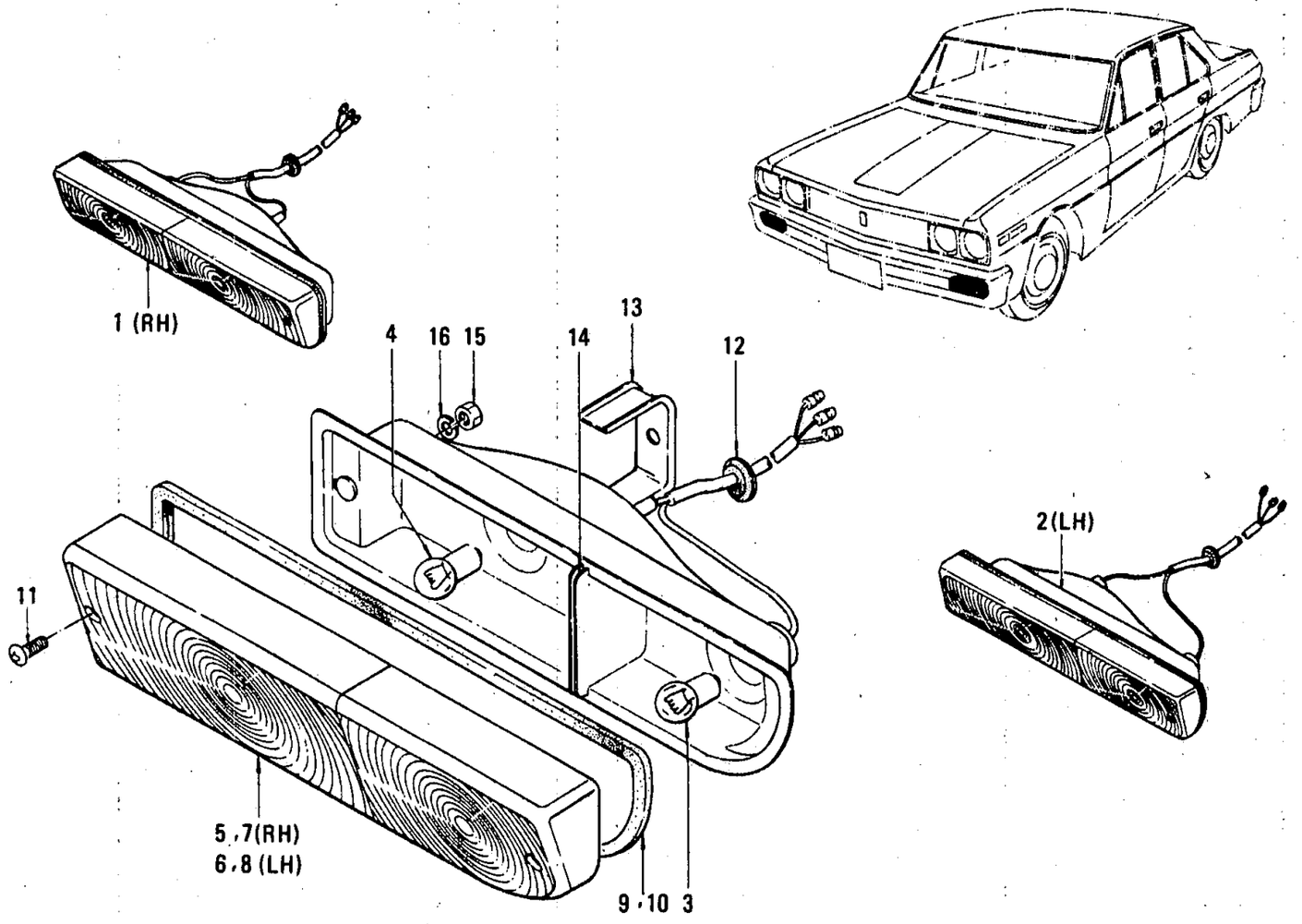

ILLUSTRATION **152**

© 1972 NISSAN MOTOR CO., LTD.

REVISED: DECEMBER, 1972

PRINTED IN JAPAN

PARKING & TURN SIGNAL LAMP

S	KEY NO.	PART NO.	DESCRIPTION	Q'TY	UNIT PKG FOR DIST.	APPLIED MODEL	APPLIED DATE FROM	APPLIED DATE UP TO	ICA N	ICA F	SUPERSEDED
	101	26120-E1201	ASSY-LAMP PARKING & TURN SIGNAL RH AMBER WHITE	1	1	Op ALL EXC USA					
	02	26120-E1202	ASSY-LAMP PARKING & TURN SIGNAL RH AMBER	1	1	ALL		0969	N	N	26120-E1201
	03	26120-E1202	ASSY-LAMP PARKING & TURN SIGNAL RH AMBER WHITE	1	1	ALL	1069				
	04	26120-E0101	ASSY-LAMP PARKING & TURN SIGNAL RH	1	2	ALL					
	05	26120-E0102	ASSY-LAMP PARKING & TURN SIGNAL RH WHITE	1	1	ALL Op USA			N	N	26120-E0101
*	201	26125-E1201	ASSY-LAMP PARKING & TURN SIGNAL LH AMBER WHITE	1	1	Op ALL EXC USA					
	02	26125-E1202	ASSY-LAMP PARKING & TURN SIGNAL LH AMBER	1	1	ALL		0969	N	N	26125-E1201
	03	26125-E1202	ASSY-LAMP PARKING & TURN SIGNAL LH AMBER WHITE	1	1	ALL	1069				
	04	26125-E0101	ASSY-LAMP PARKING & TURN SIGNAL LH	1	2	ALL					
	05	26125-E0102	ASSY-LAMP PARKING & TURN SIGNAL LH WHITE	1	1	ALL Op USA			N	N	26125-E0101
	301	26717-89906	BULB 12V-23	2	50	ALL		0969			
	02	26717-89920	BULB 12V-23	2	10	ALL	1069				
	401	26715-89902	BULB 12V-8W	2	10	ALL					
	501	26121-E0101	LENS-PARK & TURN SIGNAL LAMP RH	1	2	ALL					
	601	26126-E0101	LENS-PARK & TURN SIGNAL LAMP LH	1	2	ALL					
	701	26122-E1201	LENS-INNER TURN SIGNAL RH AMBER WHITE	1	1	Op ALL		0969			

NOTE:

© 1972 NISSAN MOTOR CO., LTD.

PRINTED IN JAPAN

PARKING & TURN SIGNAL LAMP

S	KEY NO.	PART NO.	DESCRIPTION	Q'TY	UNIT PKG FOR DIST.	APPLIED MODEL	APPLIED DATE FROM	APPLIED DATE UP TO	ICA N	ICA F	SUPERSEDED
	702	26122-E1201	LENS-INNER TURN SIGNAL RH AMBER WHITE	1	1	ALL	1069				
	801	26127-E1201	LENS-INNER TURN SIGNAL LH AMBER WHITE	1	1	UP ALL		0969			
	02	26127-E1201	LENS-INNER TURN SIGNAL LH AMBER WHITE	1	1	ALL	1069				
	901	26123-E0101	PACKING-LENS RH	1	1	ALL					
	1001	26128-E0101	PACKING-LENS LH	1	2	ALL					
*	1101	08310-42010	SCREW M4	4	50	ALL					
	02	08310-42012	SCREW M4	4	50	ALL	1069		Y	N	08310-42010
	1201	24257-10600	GROMMET-CABLE	2	5	ALL			N	N	24050-25660
	1301	26910-E0100	BRACKET-PARKING & TURN SIGNAL LAMP	4		ALL					
	1401	26997-E0101	SHADE	2	1	ALL					
	1501	08911-10510	NUT M5	4	50	ALL					
	1601	08915-13510	WASHER-LOCK M5	4	50	ALL					

NOTE:

© 1972 NISSAN MOTOR CO., LTD.

REVISED: DECEMBER, 1972
PRINTED IN JAPAN

NOTE

Printed in Japan

NISSAN MOTOR CO., LTD.

SIDE FLASHER & SIDE MARKER LAMP

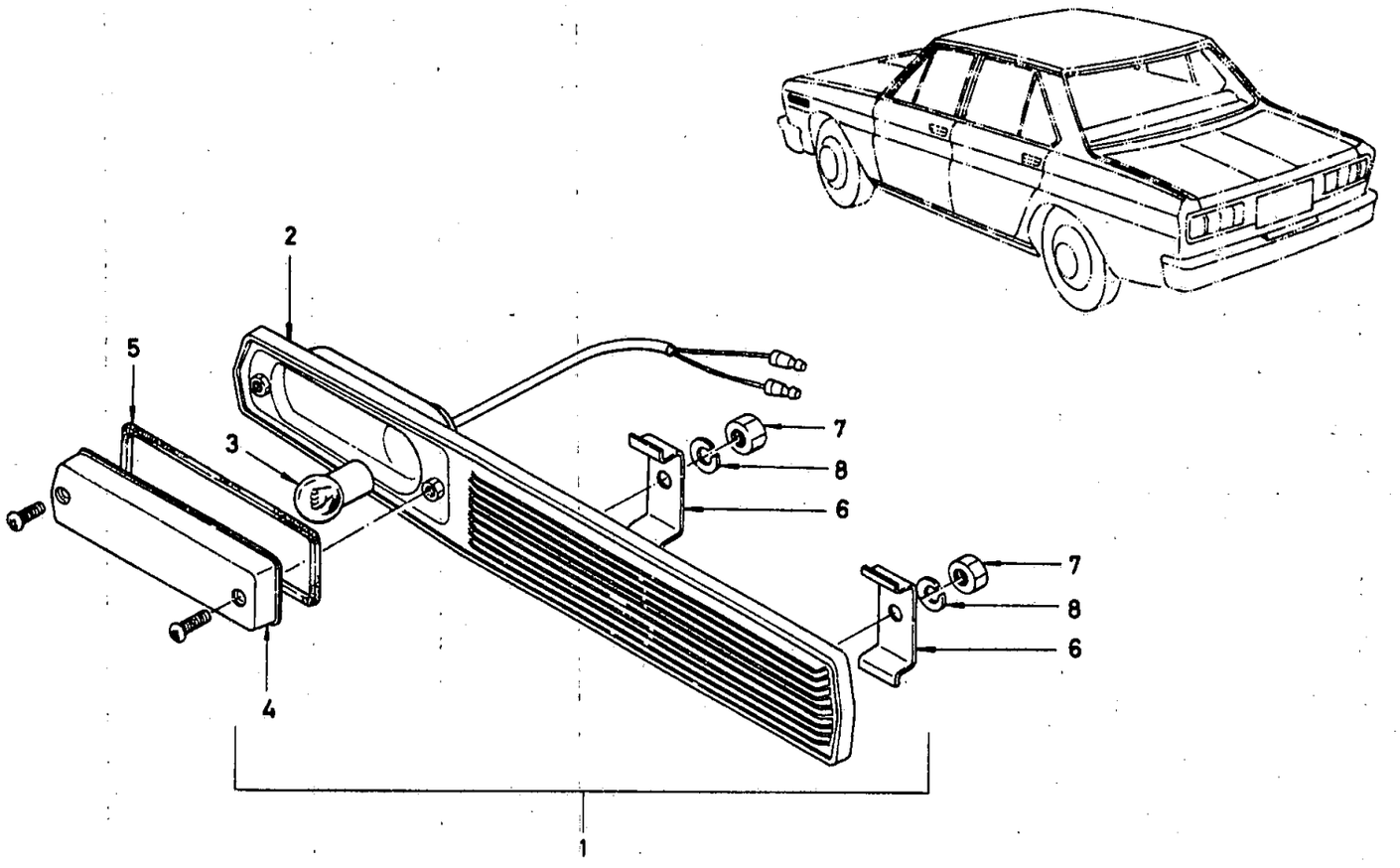

ILLUSTRATION **153**

© 1972 NISSAN MOTOR CO., LTD.

REVISED: DECEMBER, 1972

PRINTED IN JAPAN

SIDE FLASHER & SIDE MARKER LAMP

S	KEY NO.	PART NO.	DESCRIPTION	QTY	UNIT PKG FOR DIST.	APPLIED MODEL	APPLIED DATE FROM	APPLIED DATE UP TO	ICA N	ICA F	SUPERSEDED
	101	- 26160-E0101	ASSY-LAMP SIDE FLASHER	2	1	ALL					
	201	- 26164-E0101	ASSY-BODY W/FINISHER	2	1	ALL					
	301	- 26715-89902	BULB 12V-8W 4CP	2	10	ALL					
	401	- 26161-E0101	LENS-SIDE FLASHER LAMP	2	1	ALL					
	501	- 26163-E0101	PACKING-LENS	2	1	ALL					
	601	- 26169-E0101	BRAKET-MOUNTAING	4	1	ALL					
	701	- 08911-10510	NUT M5	4	50	ALL					
	801	- 08915-13510	WASHER-SPRING M5	4	50	ALL					

NOTE:

© 1972 NISSAN MOTOR CO., LTD.

PRINTED IN JAPAN

NOTE

NOTE

Printed in Japan

NISSAN MOTOR CO., LTD.

REAR LAMP (SEDAN)

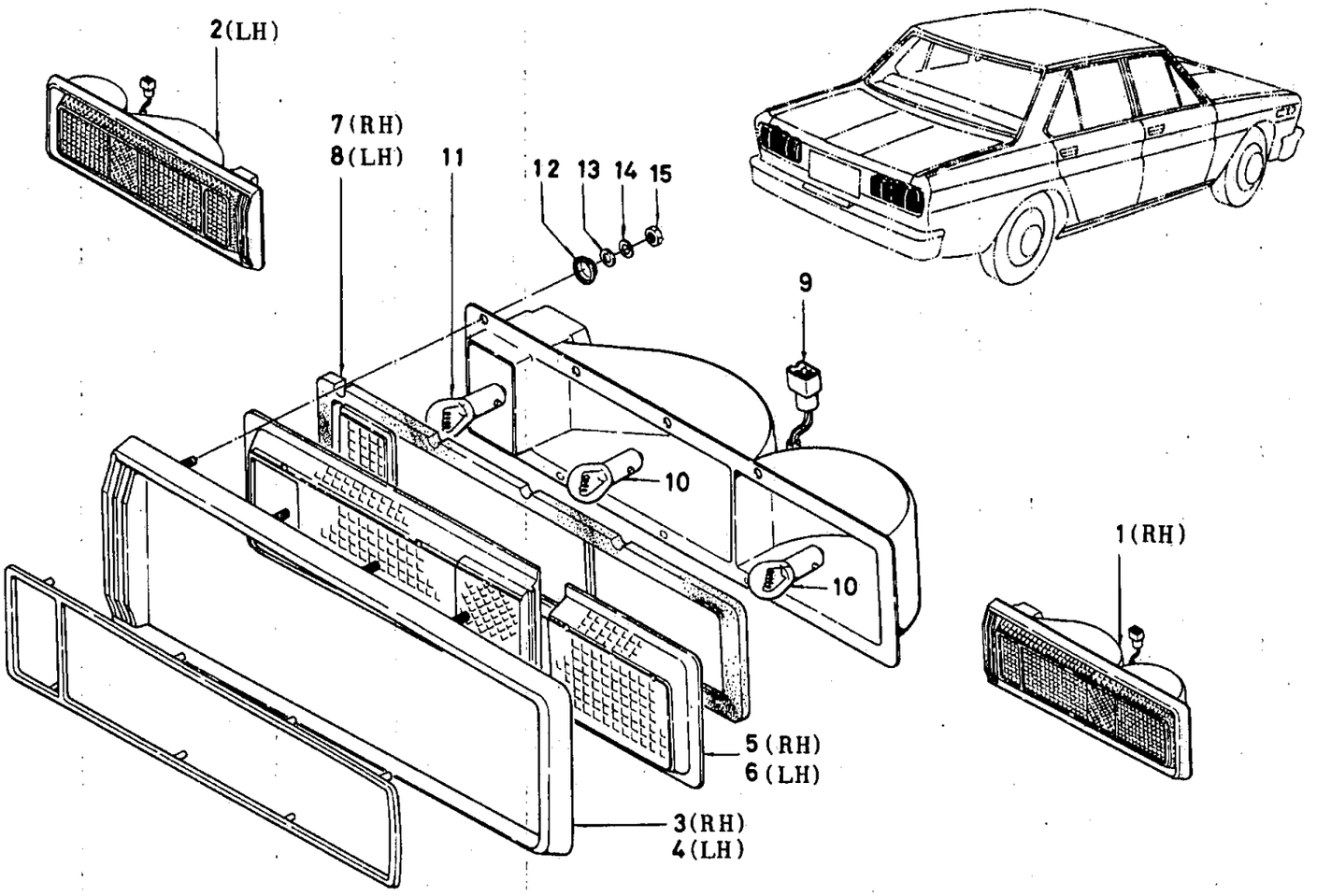

ILLUSTRATION **154**

© 1972 NISSAN MOTOR CO., LTD.

REVISED: DECEMBER, 1972

PRINTED IN JAPAN

REAR LAMP (SEDAN)

S	KEY NO.	PART NO.	DESCRIPTION	QTY	UNIT PKG FOR DIST.	APPLIED MODEL	APPLIED DATE FROM	APPLIED DATE UP TO	ICA N	ICA F	SUPERSEDED
	101	26550-E0200	ASSY-LAMP COMBINATION RH ROD & ROD	1	1	SEDAN FOR KUWAIT & TRUCIAL ST					
	02	26550-E1200	ASSY-LAMP COMBINATION RH AMBER	1	1	SEDAN EXC KUWAIT & TRUCIAL ST					
	03	26550-E1210	ASSY-LAMP COMBINATION RH BACK AMBER	1	1	SEDAN L DRIVE FRANCE USE					
	201	26555-E0200	ASSY-LAMP COMBINATION LH RED & RED	1	1	SEDAN FOR KUWAIT & TRUCIAL ST					
	02	26555-E1200	ASSY-LAMP COMBINATION LH AMBER	1	1	SEDAN EXC KUWAIT & TRUCIAL ST					
	03	26555-E1210	ASSY-LAMP COMBINATION LH BACK AMBER	1	1	SEDAN L DRIVE FRANCE USE					
	301	26552-E0200	RIM-COMBINATION LAMP RH	1	2	SEDAN					
	401	26557-E0200	RIM-COMBINATION LAMP LH	1	2	SEDAN					
	501	26521-E0200	LENS-COMBINATION LAMP RH ROD & RED	1	2	SEDAN FOR KUWAIT & TRUCIAL ST					
	02	26521-E1200	LENS-COMBINATION LAMP RH AMBER	1		SEDAN EXC KUWAIT & TRUCIAL ST					
	601	26526-E0200	LENS-COMBINATION LAMP LH RED & RED	1	2	SEDAN FOR KUWAIT & TRUCIAL ST					
	02	26526-E1200	LENS-COMBINATION LAMP LH AMBER	1		SEDAN EXC KUWAIT & TRUCIAL ST					
	701	26553-E0200	PACKING-LENS & BODY RH	1	2	SEDAN					
	801	26558-E0200	PACKING-LENS & BODY LH	1	2	SEDAN					
	901	26551-E0200	ASSY-HARNESS COMBINATION LAMP	2	2	SEDAN FOR KUWAIT & TRUCIAL ST					
	02	26551-E3200	ASSY-HARNESS COMBINATION LAMP	2		SEDAN FOR KUWAIT & TRUCIAL ST	1069				
	03	26551-E1200	ASSY-HARNESS COMBINATION LAMP	2		SEDAN EXC TRUCIAL ST					

NOTE:

© 1972 NISSAN MOTOR CO., LTD.

PRINTED IN JAPAN

REAR LAMP (SEDAN)

S	KEY NO.	PART NO.	DESCRIPTION	QTY	UNIT PKG FOR DIST.	APPLIED MODEL	APPLIED DATE FROM	APPLIED DATE UP TO	ICA N	ICA F	SUPERSEDED
	1001	26717-89920	BULB A12V-23/7W 32/4CP	2	10	SEDAN		0969			
	02	26717-89920	BULB A12V-23/7W 32/4CP	2	10	OP SEDAN L DRIVE	1069				
	03	26717-89900	BULB A12V-23W 32CP	4	10	SEDAN		0969			
	04	26717-89900	BULB A12V-23W 32CP	2	10	OP SEDAN L DRIVE	1069				
	1101	26716-89901	BULB A12V-12W 15CP	2	50	OP SEDAN L DRIVE	1069				
	1201	26994-21600	CLIP	8	10	SEDAN					
	1301	08915-43510	WASHER-PLAIN	20	50	SEDAN					
	1401	08915-13510	WASHER-LOCK M5	20	50	SEDAN					
	1501	08911-10510	NUT M5	20	50	SEDAN					

NOTE:

© 1972 NISSAN MOTOR CO., LTD.

REVISED: DECEMBER, 1972
PRINTED IN JAPAN

NOTE

Printed in Japan

NISSAN MOTOR CO., LTD.

REAR LAMP (W & V)

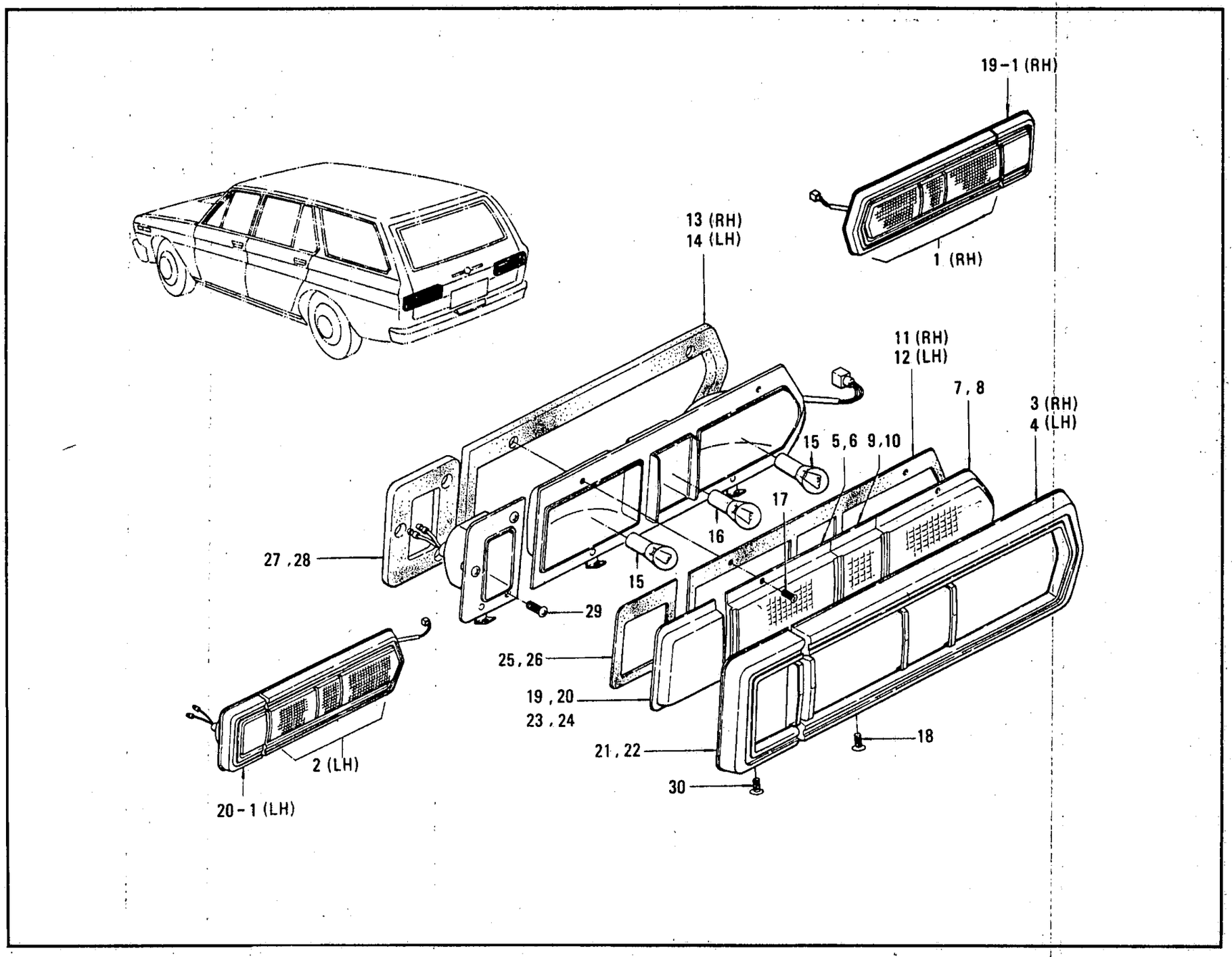

© 1972 NISSAN MOTOR CO., LTD.

ILLUSTRATION **154 A**

REVISED: DECEMBER, 1972

PRINTED IN JAPAN

REAR LAMP (W & V)

S	KEY NO.	PART NO.	DESCRIPTION	QTY	UNIT PKG FOR DIST.	APPLIED MODEL	APPLIED DATE FROM	APPLIED DATE UP TO	ICA N	ICA F	SUPERSEDED
	101	26550-E0400	ASSY-LAMP COMBINATION RH RED & RED	1	1	WAGON & VAN FOR KUWAIT & TRUCIAL ST					
	02	26550-E1400	ASSY-LAMP COMBINATION RH AMBER	1	1	WAGON & VAN EXC KUWAIT & TRUCIAL ST					
	03	26550-E1500	ASSY-LAMP COMBINATION RH BACK AMBER	1	1	OP WAGON & VAN L DRIVE FRANCE USE					
	201	26555-E0400	ASSY-LAMP COMBINATION LH RED & RED	1	1	WAGON & VAN FOR KUWAIT & TRUCIAL ST					
	02	26555-E1400	ASSY-LAMP COMBINATION LH AMBER	1	1	WAGON & VAN EXC KUWAIT & TRUCIAL ST					
	03	26555-E1500	ASSY-LAMP COMBINATION LH BACK AMBER	1	1	OP WAGON & VAN L DRIVE FRANCE USE					
	301	26552-E0400	ASSY-RIM COMBINATION LAMP RH	1	1	WAGON & VAN					
	401	26557-E0400	ASSY-RIM COMBINATION LAMP LH	1	1	WAGON & VAN					
	501	26531-E0400	LENS-TAIL & TURN SIGNAL LAMP RH RED	1	1	WAGON & VAN FOR KUWAIT & TRUCIAL ST					
	02	26531-E1400	LENS-TAIL & TURN SIGNAL LAMP RH AMBER	1	1	WAGON & VAN EXC KUWAIT & TRUCIAL ST					
	601	26536-E0400	LENS-TAIL & TURN SIGNAL LAMP LH RED	1	1	WAGON & VAN FOR KUWAIT & TRUCIAL ST					
	02	26536-E1400	LENS-TAIL & TURN SIGNAL LAMP LH AMBER	1	1	WAGON & VAN EXC KUWAIT & TRUCIAL ST					
	701	26521-E0400	LENS-TAIL & STOP LAMP RH	1	1	WAGON & VAN					

NOTE:

© 1972 NISSAN MOTOR CO., LTD.

PRINTED IN JAPAN

REAR LAMP (W & V)

S	KEY NO.	PART NO.	DESCRIPTION	QTY	UNIT PKG FOR DIST.	APPLIED MODEL	APPLIED DATE FROM	APPLIED DATE UP TO	ICA N	ICA F	SUPERSEDED
	801	26526-E0400	LENS-TAIL & STOP LAMP LH	1	1	WAGON & VAN					
	901	26541-E0400	LENS-REVERSE LAMP RH	1	1	WAGON & VAN					
	1001	26546-E0400	LENS-REVERSE LAMP LH	1	1	WAGON & VAN					
	1101	26553-E0400	PACKING-LENS RH	1	1	WAGON & VAN					
	1201	26558-E0400	PACKING LENS LH	1	1	WAGON & VAN					
	1301	26532-E0400	PACKING-SEAT RH	1	1	WAGON & VAN					
	1401	26537-E0400	PACKING-SEAT LH	1	1	WAGON & VAN					
	1501	26717-89920	BULB 12V-23/17W 32/14CP	4	10	WAGON & VAN		0969			
	02	26717-89920	BULB 12V-23/17W 32/14CP	2	10	OP WAGON & VAN L DRIVE	1069				
	03	26717-89900	BULB 12V-23W 32CP	2	10	WAGON & VAN		0969			
	04	26717-89900	BULB 12V-23W 32CP	2	10	OP WAGON & VAN L DRIVE	1069				
	1601	26716-89901	BULB 12V-12W 15CP	2	50	OP WAGON & VAN L DRIVE	1069				
•	1701	08310-41010	SCREW-CROSS M4	20	50	WAGON & VAN					
	02	08310-41012	SCREW-CROSS M4	20	1	WAGON & VAN			Y	N	08310-41010
	1801	08330-40820	SCREW-CROSS M4	4	50	WAGON & VAN					
	1901	26560-E1400	ASSY-REFLECTOR REFLEX RH AMBER	1	1	WAGON & VAN EXC KUWAIT & TRUCIAL ST					
	02	26560-E0401	ASSY-REFLECTOR REFLEX RH RED	1	1	WAGON & VAN FOR KUWAIT & TRUCIAL ST					
	2001	26565-E1400	ASSY-REFLECTOR REFLEX LH AMBER	1	1	WAGON & VAN EXC KUWAIT & TRUCIAL ST					

NOTE:

© 1972 NISSAN MOTOR CO., LTD.

REVISED: DECEMBER, 1972
PRINTED IN JAPAN

REAR LAMP (W & V)

S	KEY NO.	PART NO.	DESCRIPTION	QTY	UNIT PKG FOR DIST.	APPLIED MODEL	APPLIED DATE FROM	APPLIED DATE UP TO	ICA N	ICA F	SUPERSEDED
	2002	26565-E0401	ASSY-REFLECTOR REFLEX LH RED	1	1	WAGON & VAN FOR KUWAIT & TRUCIAL ST					
	2101	26562-E0401	ASSY-RIM COMBINATION LAMP REAR RH	1	1	WAGON & VAN					
	2201	26567-E0401	ASSY-RIM COMBINATION LAMP REAR LH	1	1	WAGON & VAN					
	2301	26561-E0401	REFLECTOR-REFLEX RH	1	1	WAGON & VAN					
	2401	26566-E0401	REFLECTOR-REFLEX LH	1	1	WAGON & VAN					
	2501	26563-E0401	PACKING-LENS RH	1	1	WAGON & VAN					
	2601	26568-E0401	PACKING-LENS LH	1	1	WAGON & VAN					
	2701	26534-E0401	PACKING-SEAT RH	1	1	WAGON & VAN					
	2801	26539-E0401	PACKING-SEAT LH	1	1	WAGON & VAN					
*	2901	08310-41010	SCREW-CROSS M4	4	50	WAGON & VAN					
	02	08310-41012	SCREW-CROSS M4	4	10	WAGON & VAN	1069		Y	N	08310-41010
	3001	08330-40820	SCREW-CROSS M4	2	50	WAGON & VAN					

NOTE:

© 1972 NISSAN MOTOR CO., LTD.

PRINTED IN JAPAN

NOTE

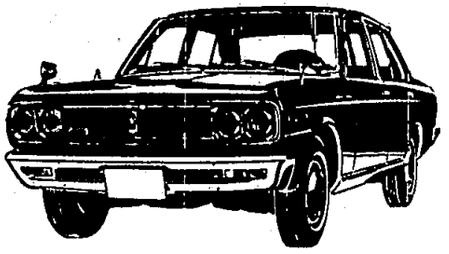

NISSAN MOTOR CO., LTD.

Printed in Japan

NOTE

Printed in Japan

NISSAN MOTOR CO., LTD.

LICENCE LAMP (SEDAN)

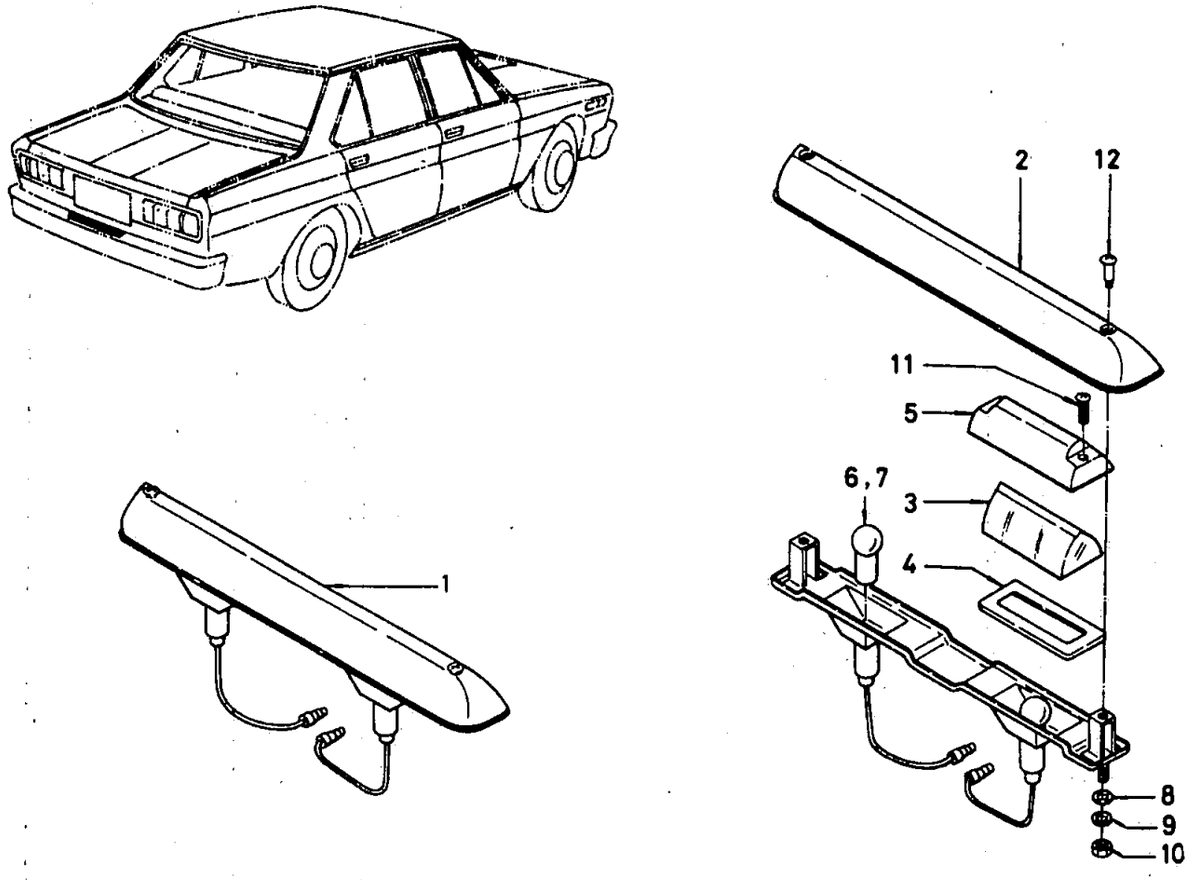

ILLUSTRATION **155**

© 1972 NISSAN MOTOR CO., LTD.

REVISED: DECEMBER, 1972

PRINTED IN JAPAN

LICENCE LAMP (SEDAN)

S	KEY NO.	PART NO.	DESCRIPTION	QTY	UNIT PKG FOR DIST.	APPLIED MODEL	APPLIED DATE FROM	APPLIED DATE UP TO	ICA N	ICA F	SUPERSEDED
	101	- 26510-E0100	ASSY-LAMP LICENCE	1	2	SEDAN					
	201	- 26512-E0100	COVER-LICENCE LAMP	1	1	SEDAN					
	301	- 26511-E0100	LENS-LICENCE LAMP	2	2	SEDAN					
	401	- 26513-E0100	PACKING-LENS	2		SEDAN					
	501	- 26516-E0100	COVER-LENS	2		SEDAN					
	601	- 26717-89920	BULB 12V 8W 6CP	2	10	SEDAN			Y	Y	26717-04200
	701	- 26715-89901	BULB 12V 7.5W 6CP	2	50	SEDAN					
	801	- 08915-43510	WASHER-PLAIN	3	50	SEDAN					
	901	- 08915-13510	WASHER-SPRING	3	50	SEDAN					
	1001	- 08911-10510	NUT M5	3	50	SEDAN					
	1101	- 26517-E0100	SCREW	2		SEDAN					
	1201	- 08310-41610	SCREW-CROSS L=16 M4	4	50	SEDAN					

NOTE:

© 1972 NISSAN MOTOR CO., LTD.

PRINTED IN JAPAN

NOTE

NISSAN MOTOR CO., LTD.

Printed in Japan

NOTE

Printed in Japan

NISSAN MOTOR CO., LTD.

LICENCE LAMP (W & V)

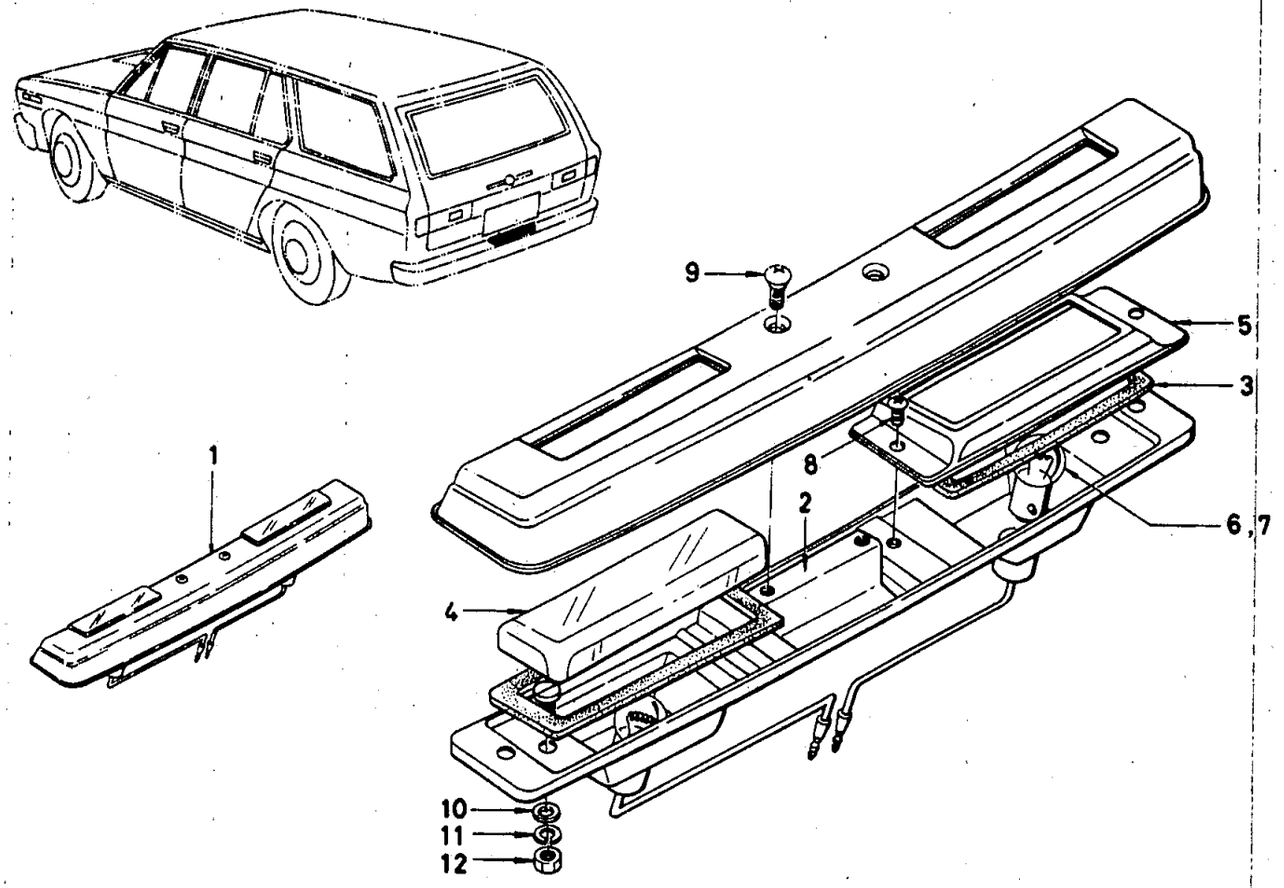

ILLUSTRATION **155A**

© 1972 NISSAN MOTOR CO., LTD.

REVISED: DECEMBER, 1972

PRINTED IN JAPAN

C

NISSAN

LICENCE LAMP (W & V)

S	KEY NO.	PART NO.	DESCRIPTION	QTY	UNIT PKG FOR DIST.	APPLIED MODEL	APPLIED DATE FROM	APPLIED DATE UP TO	ICA N	ICA F	SUPERSEDED
	101	- 26510-E0400	ASSY-LAMP LICENSE	1	1	WAGON & VAN					
	201	- 26512-E0400	COVER-LICENCE LAMP	1		WAGON & VAN					
	301	- 26513-E0400	PACKING-LENS	2		WAGON & VAN					
	401	- 26511-E0400	LENS-LICENCE LAMP	2		WAGON & VAN					
	501	- 26516-E0400	COVER-LENS	2		WAGON & VAN					
	601	- 26717-89920	BULB 12V 8W 6CP	2	10	WAGON & VAN			Y	Y	26717-04200
	701	- 26715-89901	BULB 12V-7.5W 6CP	2	50	WAGON & VAN					
	801	- 08310-40612	SCREW CROSS M4	4		WAGON & VAN					
	901	- 08330-40820	SCREW CROSS M4	2	50	WAGON & VAN					
	1001	- 08915-43510	WASHER-PLAIN	3	50	WAGON & VAN					
	1101	- 08915-13510	WASHER-SPRING LOCK	3	50	WAGON & VAN					
	1201	- 08911-10510	NUT M5	3	50	WAGON & VAN					

NOTE:

© 1972 NISSAN MOTOR CO., LTD.

PRINTED IN JAPAN

Enjoy the Assurance of Nissan Factory Parts.

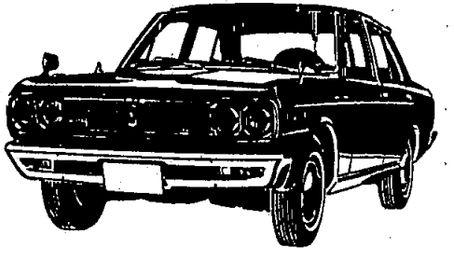

NISSAN

NOTE

Printed in Japan

NISSAN MOTOR CO., LTD.

ROOM LAMP & INSPECTION LAMP (SEDAN)

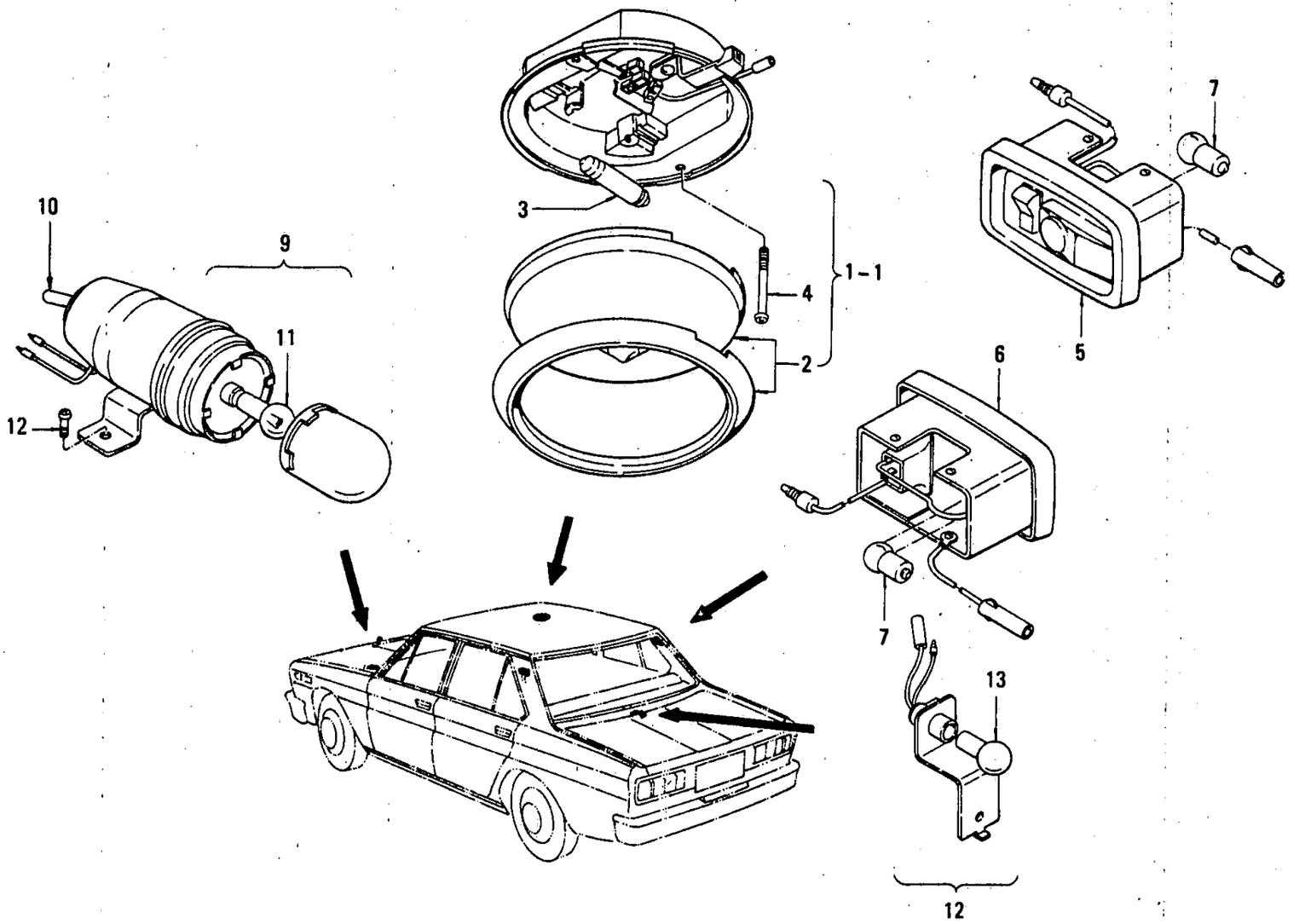

ILLUSTRATION **156-1**

© 1972 NISSAN MOTOR CO., LTD.

REVISED: DECEMBER, 1972

PRINTED IN JAPAN

ROOM LAMP & INSPECTION LAMP (W & V)

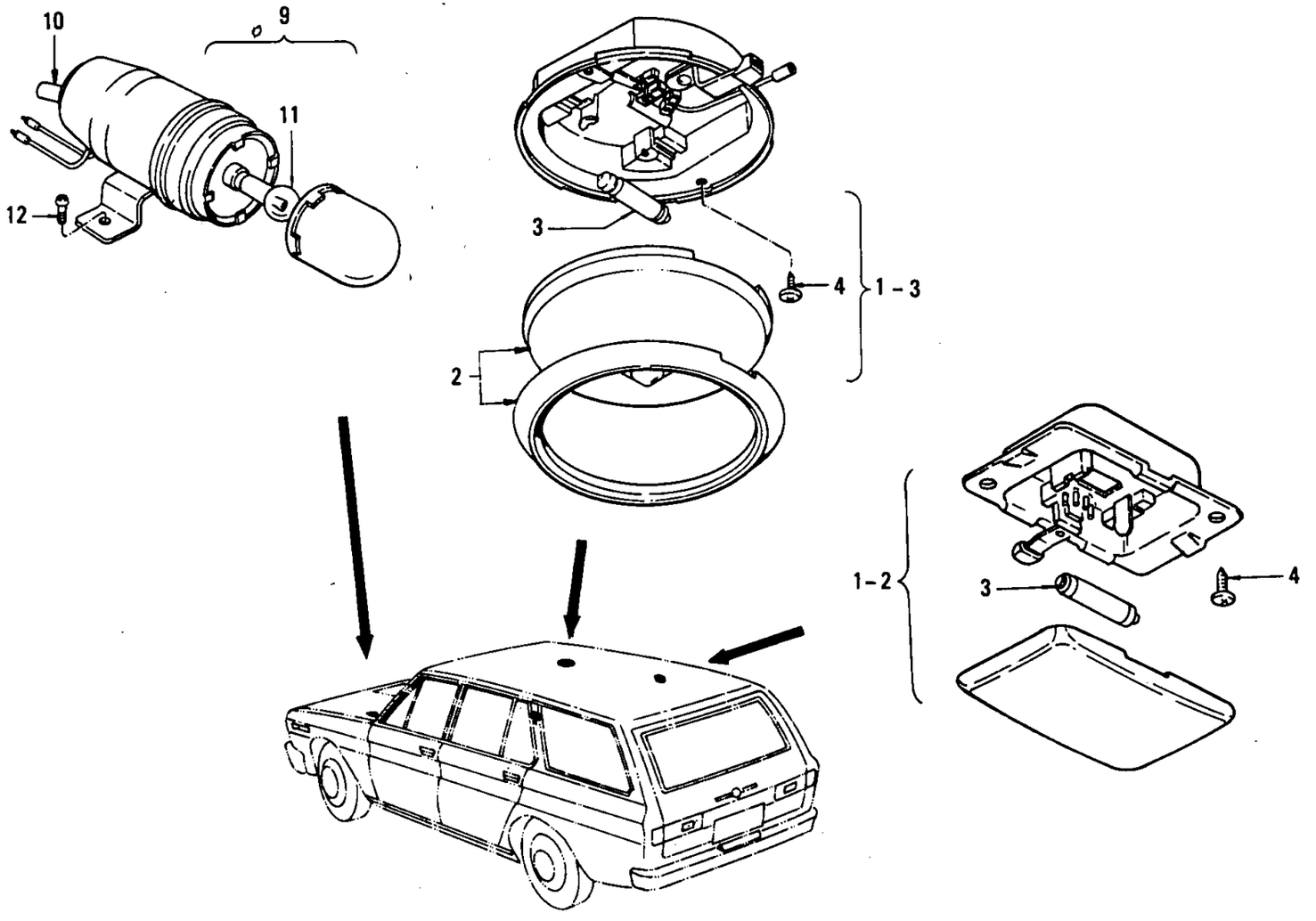

© 1972 NISSAN MOTOR CO., LTD.

PRINTED IN JAPAN

ROOM LAMP & INSPECTION LAMP

S	KEY NO.	PART NO.	DESCRIPTION	Q'TY	UNIT PKG FOR DIST.	APPLIED MODEL	APPLIED DATE FROM	APPLIED DATE UP TO	ICA N	ICA F	SUPERSEDED
*	101	26410-E0100	ASSY-LAMP ROOM	1	2	ALL					
	02	26410-E0101	ASSY-LAMP ROOM	1	1	ALL			Y	Y	26410-E0100
	03	26410-E0400	ASSY-LAMP ROOM	1	1	WAGON & VAN					
	201	26411-E0101	ASSY-LENS WITH RIM	1	1	ALL					
	301	26736-89902	BULB 12V-10W	1	10	ALL					
*	401	08510-41210	SCREW-TAPPING M4X12	2	50	ALL					
	02	08510-41212	SCREW-TAPPING M4X12	2	50	ALL			Y	N	08510-41210
	03	00511-01610	SCREW-TAPPING #10X16	2	50	WAGON & VAN					
	501	26415-E0100	ASSY-LAMP PERSONAL RH	1	2	SEDAN EXC STD		0969			
	02	26415-E0100	ASSY-LAMP PERSONAL RH	1	2	SUPER CUSTOM	1069				
	601	26418-E0100	ASSY-LAMP PERSONAL LH	1	2	SEDAN EXC STD		0969			
	02	26418-E0100	ASSY-LAMP PERSONAL LH	1	2	SUPER CUSTOM	1069				
	701	26420-E0101	ASSY-LAMP STEP RH	1	2	ALL					
	02	26425-E0101	ASSY-LAMP STEP LH	1	1	ALL					
	801	26715-89900	BULB 12V-6W	1	50	SEDAN EXC STD		0969			
	02	26715-89900	BULB 12V-6W	2	50	SUPER CUSTOM	1069				
*	901	26740-89901	ASSY-LAMP INSPECTION	1	1	ALL					
	02	26740-89904	ASSY-LAMP INSPECTION	1	1	ALL			Y	Y	26740-89901
	1001	26745-89900	ASSY-SWITCH INSPECTION	1	5	ALL					
	1101	26232-30000	BULB 12V-8W	1	50	ALL					
*	1201	00511-01010	SCREW-TAPPING #10X10	2	50	ALL					
	02	00511-01012	SCREW-TAPPING #10X10	2	50	ALL			Y	N	00511-01010
	1301	26590-73000	ASSY-LAMP TRUNK ROOM	1	1	SEDAN					

NOTE:

© 1972 NISSAN MOTOR CO., LTD.

REVISED: DECEMBER, 1972
PRINTED IN JAPAN

ROOM LAMP & INSPECTION LAMP

S	KEY NO.	PART NO.	DESCRIPTION	Q'TY	UNIT, PKG FOR DIST.	APPLIED MODEL	APPLIED DATE FROM	APPLIED DATE UP TO	ICA N	ICA F	SUPERSEDED
	1401	26715-89900	BULB 12V-6W	1	50	SEDAN		0969			

NOTE:

© 1972 NISSAN MOTOR CO., LTD.

PRINTED IN JAPAN

NOTE

NISSAN MOTOR CO., LTD.

Printed in Japan

NOTE

Printed in Japan

NISSAN MOTOR CO., LTD.

PUB. No.: C-0020 VOL. 2

ILLUSTRATION No.: 157 through 160

A spare ILLUSTRATION No. in the future.

© 1972 NISSAN MOTOR CO., LTD.

Printed in Japan

POWER TRAIN

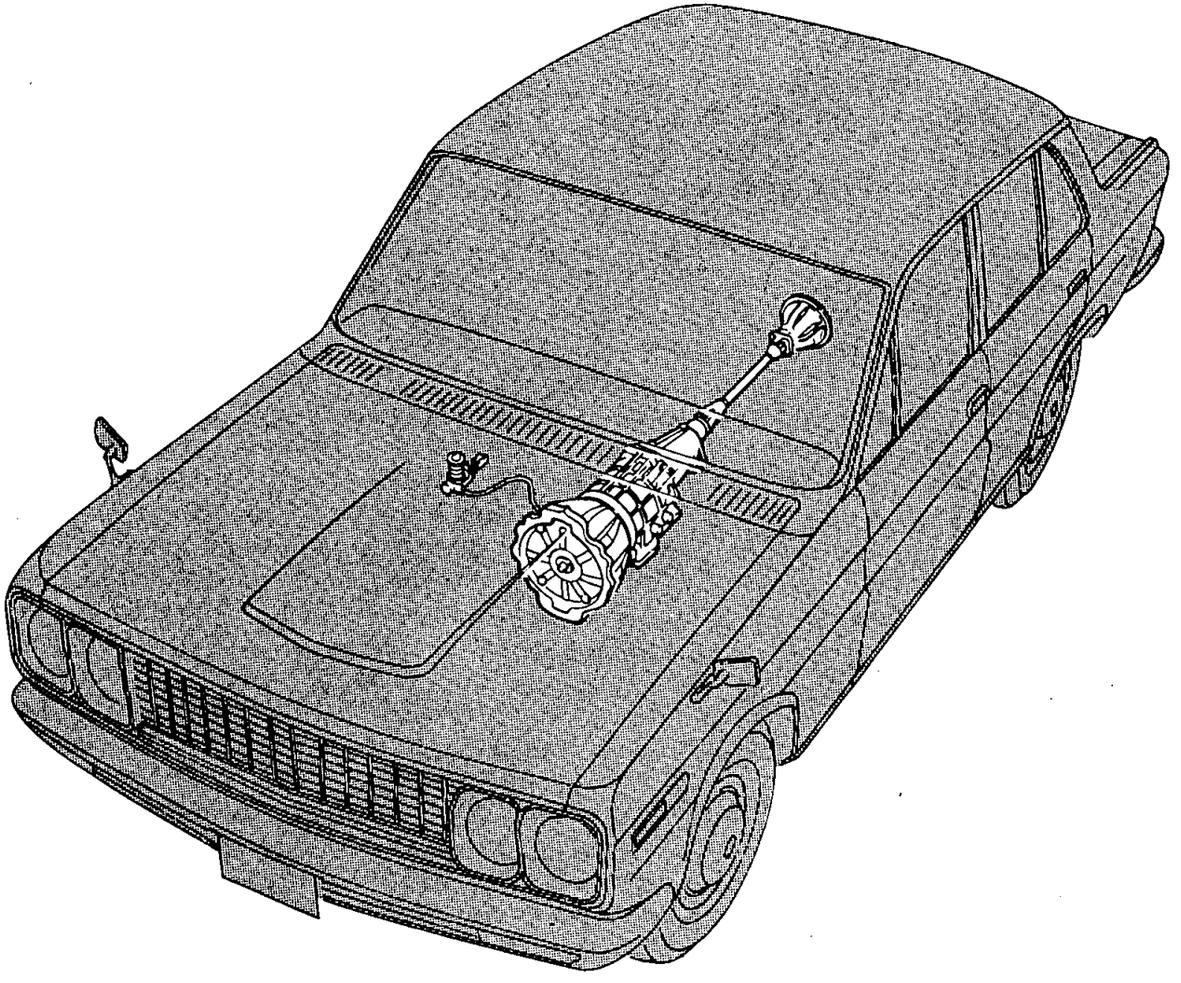

NOTE

Printed in Japan

NISSAN MOTOR CO., LTD.

CLUTCH DISC, CLUTCH COVER & WITHDRAWAL LEVER

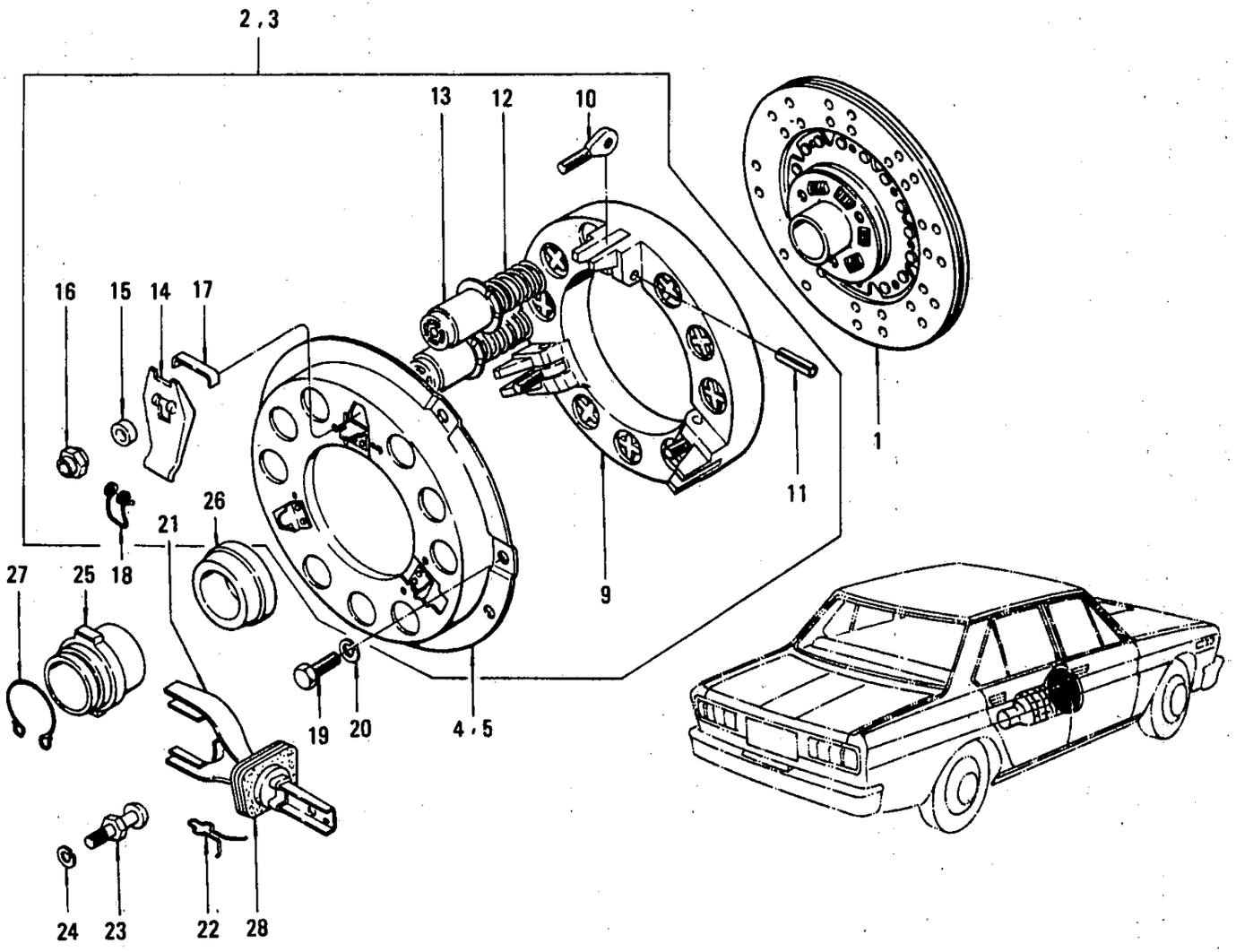

ILLUSTRATION **161**

© 1972 NISSAN MOTOR CO., LTD.

REVISED: DECEMBER, 1972

PRINTED IN JAPAN

C

CLUTCH DISC, CLUTCH COVER & WITHDRAWAL LEVER

S	KEY NO.	PART NO.	DESCRIPTION	Q'TY	UNIT PKG FOR DIST.	APPLIED MODEL	APPLIED DATE FROM	APPLIED DATE UP TO	ICA N	ICA F	SUPERSEDED
	1D1	30100-73004	ASSY-DISC CLUTCH	1	1	GASOLINE MANUAL					
	D2	30100-E4301	ASSY-DISC CLUTCH	1	1	GASOLINE MANUAL			Y	N	30100-73004
	D3	30100-73006	ASSY-DISC CLUTCH	1	1	GASOLINE MANUAL			Y	Y	26410-E0100
*	D4	30100-E0900	ASSY-DISC CLUTCH	1	1	DIESEL MANUAL					
	2D1	30210-71200	ASSY-COVER CLUTCH	1	1	MANUAL					
*	3D1	30207-38701	COMP-COVER CLUTCH	1		MANUAL					
	4D1	30209-38701	COVER-CLUTCH WITH FULCRUM	1	1	MANUAL					
	5D1	30211-38700	COVER-CLUTCH	1		MANUAL					
*	6D1	30236-38701	FULCRUM	3	20	MANUAL					
*	7D1	30237-38700	RIVET-FULCRUM TO COVER	6	50	MANUAL					
*	8D1	30208-38700	COMP-PLATE PRESSURE	1	1	MANUAL					
	9D1	30213-38700	PLATE-PRESSURE	1	1	MANUAL					
	10D1	30224-38700	BOLT-EYE	3	20	MANUAL					
	11D1	30225-38700	PIN-EYE BOLT	3	50	MANUAL					
	12D1	30214-71200	SPRING-PRESSURE	9	45	MANUAL					
	13D1	30215-38700	RETAINER-PRESSURE SPRING	9	20	MANUAL					
	14D1	30221-38700	LEVER-RELEASE	3	10	MANUAL					
	15D1	30239-38700	SEAT-RELEASE LEVER	3	20	MANUAL					
	16D1	30229-38700	NUT-EYE BOLT	3	20	MANUAL					
	17D1	30251-38700	STOPPER-RELEASE LEVER	3	50	MANUAL					
	18D1	30231-38700	SPRING-RETRACTIG LEVER	3	50	MANUAL					
	19D1	00124-52210	BOLT-TO ATTACH CLUTCH TO FLYWHEEL	6	50	MANUAL			Y	N	00124-52200

NOTE:

© 1972 NISSAN MOTOR CO., LTD.

PRINTED IN JAPAN

CLUTCH DISC, CLUTCH COVER & WITHDRAWAL LEVER

S	KEY NO.	PART NO.	DESCRIPTION	Q'TY	UNIT PKG FOR DIST.	APPLIED MODEL	APPLIED DATE FROM	APPLIED DATE UP TO	ICA N	ICA F	SUPERSEDED
	20D1	00915-21510	WASHER-LOCK TO ATTACH CLUTCH TO FLYWHEEL	6	50				Y	N	00915-21500
*	21D1	30531-78002	LEVER-WITHDRAWAL CLUTCH	1	1	MANUAL					
*	D2	30531-78052	LEVER-WITHDRAWAL CLUTCH	1	1	MANUAL			Y	N	30531-78002
	D3	30531-78055	LEVER-WITHDRAWAL CLUTCH	1	1	MANUAL			Y	N	30531-78052
	22D1	30534-21000	SPRING-RETAINER WITH DRAWAL LEVER	1	5	MANUAL					
*	23D1	30537-78001	PIN-BALL WITH DRAWAL LEVER	1	10	MANUAL					
	D2	30537-E3200	PIN-BALL WITH DRAWAL LEVER	1	5	MANUAL			Y	N	30537-78001
	24D1	08915-14010	WASHER-LOCK	1	50	MANUAL					
	25D1	30501-73000	SLEEVE-CLUTCH RELEASE	1	1	MANUAL					
	D2	30501-A3800	SLEEVE-CLUTCH RELEASE	1	1	L24 L20A MANUAL					
	D3	30501-22102	SLEEVE-CLUTCH RELEASE	1	1	H20 SD22					
	26D1	30502-61000	BEARING-CLUTCH RELEASE	1	1	MANUAL		0969			
	D2	30502-13200	BEARING-CLUTCH RELEASE	1	1	MANUAL	1069				
	27D1	30514-14600	SPRING-HOLDER BEARING SLEEVE	1	10	MANUAL					
	28D1	30542-78001	COVER-DUST WITH DRAWAL LEVER	1	5	MANUAL		0969			
	D2	30542-78001	COVER-DUST WITH DRAWAL LEVER	1	5	H20 SD22	1069				
	D3	30542-21000	COVER-DUST WITH DRAWAL LEVER	1	5	L24 L20A MANUAL	1069				

NOTE:

© 1972 NISSAN MOTOR CO., LTD.

REVISED: DECEMBER, 1972
PRINTED IN JAPAN
C

NOTE

Printed in Japan

NISSAN MOTOR CO., LTD.

CLUTCH OPERATING CYLINDER & CLUTCH CONTROL HOSE (R DRIVE)

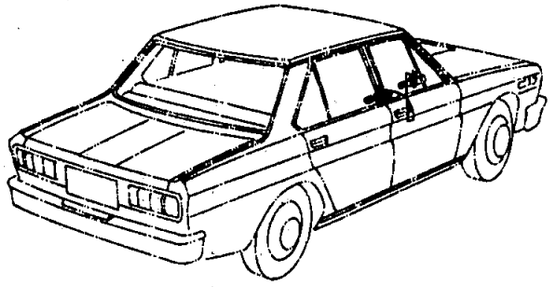

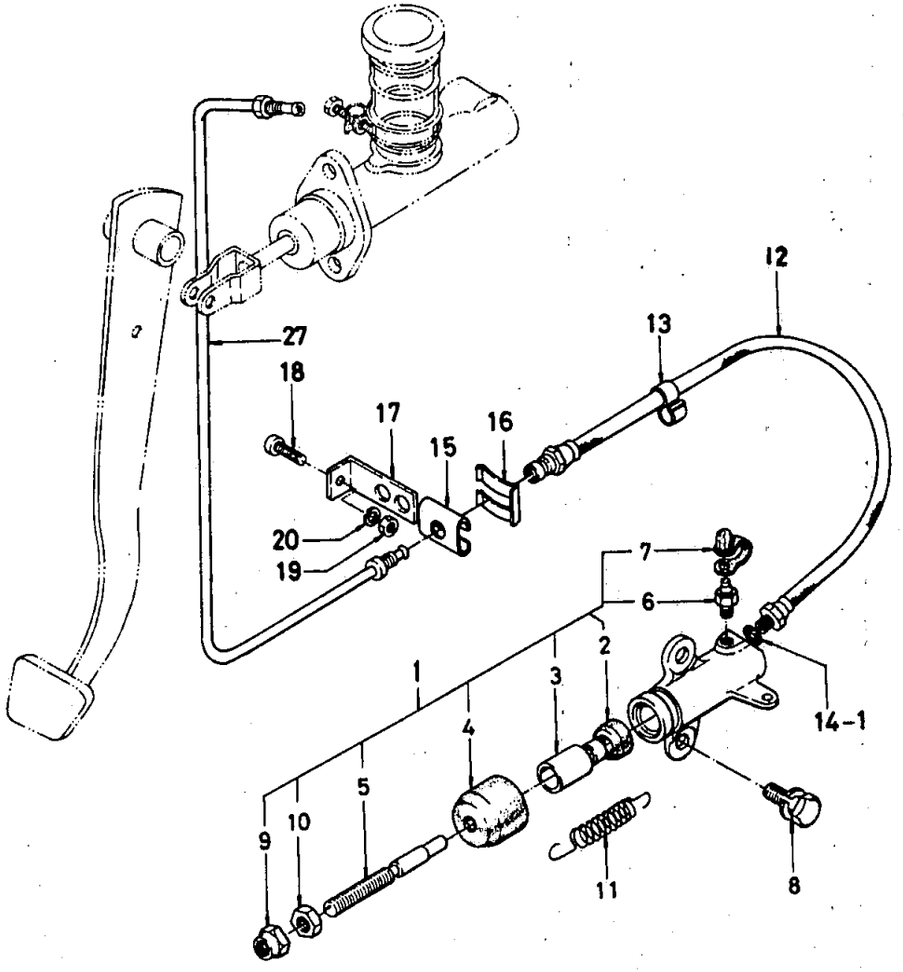

ILLUSTRATION **162-1**

© 1972 NISSAN MOTOR CO., LTD.

REVISED: DECEMBER, 1972

PRINTED IN JAPAN

CLUTCH OPERATING CYLINDER & CLUTCH CONTROL HOSE (L DRIVE)

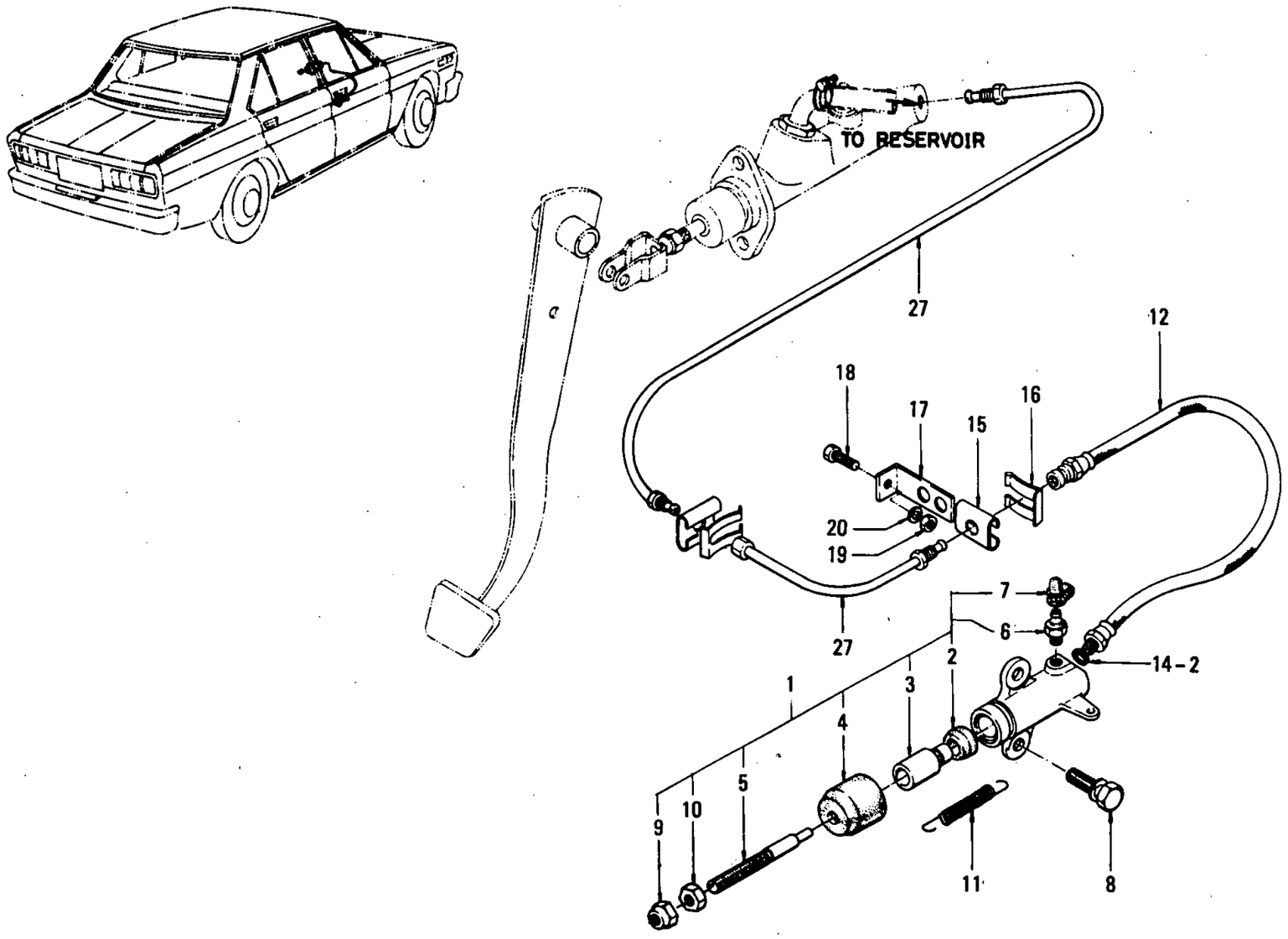

© 1972 NISSAN MOTOR CO., LTD.

PRINTED IN JAPAN

CLUTCH OPERATING CYLINDER & CLUTCH CONTROL HOSE

S	KEY NO.	PART NO.	DESCRIPTION	Q'TY	UNIT PKG FOR DIST.	APPLIED MODEL	APPLIED DATE FROM	APPLIED DATE UP TO	ICA N	ICA F	SUPERSEDED
	101	- 30620-78000	ASSY-CYLINDER OPERATING	1	1	SEDAN MANUAL					
	02	- 30620-A0110	ASSY-CYLINDER OPERATING (TOKICO)	1	1	ALL MANUAL					
	03	- 30620-28800	ASSY-CYLINDER OPERATING (NABCO)	1	1	ALL MANUAL					
	04	- 30620-E3400	ASSY-CYLINDER OPERATING	1	1	ALL MANUAL			Y	N	00124-52200
	201	- 30624-36901	CUP-PISTON	1	50	SEDAN MANUAL					
	301	- 30625-36900	PISTON-CLUTCH OPERATING	1	10	SEDAN MANUAL					
	401	- 30627-78000	COVER-DUST	1	5	SEDAN MANUAL					
	501	- 30628-73000	ROD-PUSH	1	10	SEDAN MANUAL					
	601	- 41128-30001	SCREW-BLEEDER	1	10	SEDAN MANUAL					
	701	- 41129-30001	CAP-BLEEDER	1	10	SEDAN MANUAL					
	801	- 08121-03065	BOLT-WITH SPRING WASHER	2	50	ALL MANUAL					
	901	- 30547-78001	NUT-PUSH WITH DRAWAL LEVER	1	10	ALL MANUAL					
	1001	- 08911-30810	NUT	1	50	ALL MANUAL					
	1101	- 30533-76001	RETURN-SPRING	1	10	ALL MANUAL					
	1201	- 46212-73400	ASSY-HOSE CLUTCH	1	2	L23 L24 R DRIVE					
	02	- 46212-E0100	ASSY-HOSE CLUTCH	1	2	L23 L24 R DRIVE			N	N	46212-73400
	03	- 46212-73001	ASSY-HOSE CLUTCH	1	2	J20 L20A R DRIVE					
	04	- 46212-E0200	ASSY-HOSE CLUTCH	1	2	J20 L20A R DRIVE			N	N	46212-73001
	05	- 46212-75001	ASSY-HOSE CLUTCH	1	2	MANUAL L DRIVE					
	06	- 46212-E1300	ASSY-HOSE CLUTCH	1	2	MANUAL L DRIVE			N	N	46212-75001
	07	- 46212-E3200	ASSY-HOSE CLUTCH L=290	1	2	ALL MANUAL			Y	N	46201-89914
	08	- 46212-E3401	ASSY-HOSE CLUTCH	1	2	ALL MANUAL			Y	N	46212-E3400

NOTE:

© 1972 NISSAN MOTOR CO., LTD.

REVISED: DECEMBER, 1972
PRINTED IN JAPAN

CLUTCH OPERATING CYLINDER & CLUTCH CONTROL HOSE

S	KEY NO.	PART NO.	DESCRIPTION	QTY	UNIT PKG FOR DIST.	APPLIED MODEL	APPLIED DATE FROM	APPLIED DATE UP TO	ICA N	ICA F	SUPERSEDED
	1301	46214-73400	CLIP-HOSE CLUTCH	1		L23 L24 R DRIVE					
	1401	46237-F0800	GASKET-CLUTCH HOSE TO CYLINDER	1	10	R DRIVE					
	02	46237-18000	GASKET-CLUTCH HOSE TO CYLINDER	1	10	ALL MANUAL					
	1501	46205-61000	PLATE-LOCK CLUTCH HOSE	1	10	ALL MANUAL					
	1601	46206-61000	SPRING-LOCK CLUTCH HOSE	1	5	ALL MANUAL					
	02	46206-18000	SPRING-LOCK CLUTCH HOSE	1	5	ALL MANUAL			N	N	46206-61000
	1701	46215-78100	BRACKET-CLUTCH HOSE	1	1	ALL MANUAL					
	1801	08110-81610	BOLT	1	50	L23 L24 SD22 H20(LD)					
	1901	08911-10810	NUT	1	50	L23 L24 SD22 H20(LD)					
	2001	08915-13810	WASHER-LOCK	1	50	ALL MANUAL					
	2101	46215-E3200	ASSY-BRACKET CLUTCH HOSE	1	1	ALL MANUAL					
	2201	00114-62010	BOLT-HEX	2	50	ALL MANUAL					
	2301	00915-11610	WASHER-SPRING	2	50	ALL MANUAL					
	2401	30650-73002	ASSY-TUBE CLUTCH HOSE TO OPERATING CYLINDER	1	5	ALL MANUAL					
●	2501	30650-E0100	ASSY-TUBE CLUTCH HOSE TO OPERATING CYLINDER	1	5	ALL MANUAL			N	N	30650-73002
	2601	30650-E0101	ASSY-TUBE CLUTCH HOSE TO OPERATING CYLINDER	1	5	ALL MANUAL			Y	N	30650-E0100
	02	46410-E3202	ASSY-TUBE MASTER CYLINDER TO HOSE	1	1	MANUAL R DRIVE			Y	N	46410-E3201
	2701	46410-E1301	ASSY-TUBE MASTER CYLINDER TO HOSE	1	1	MANUAL L DRIVE			Y	N	46410-E1300

NOTE:

© 1972 NISSAN MOTOR CO., LTD.

PRINTED IN JAPAN

CLUTCH OPERATING CYLINDER & CLUTCH CONTROL HOSE

S	KEY NO.	PART NO.	DESCRIPTION	Q'TY	UNIT PKG FOR DIST.	APPLIED MODEL	APPLIED DATE FROM	APPLIED DATE UP TO	ICA N	ICA F	SUPERSEDED
	2702	46410-E3702	ASSY-TUBE MASTER CYLINDER TO HOSE	1	1	MANUAL L DRIVE			Y	N	46410-E3701

NOTE:

© 1972 NISSAN MOTOR CO., LTD.

REVISED: DECEMBER, 1972
PRINTED IN JAPAN

NOTE

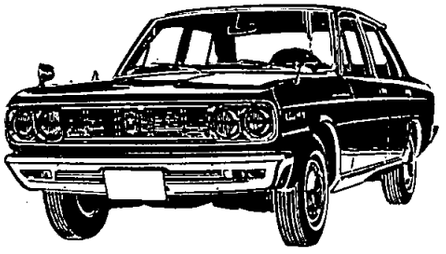

Printed in Japan

NISSAN MOTOR CO., LTD.

CLUTCH MASTER CYLINDER (NABCO)

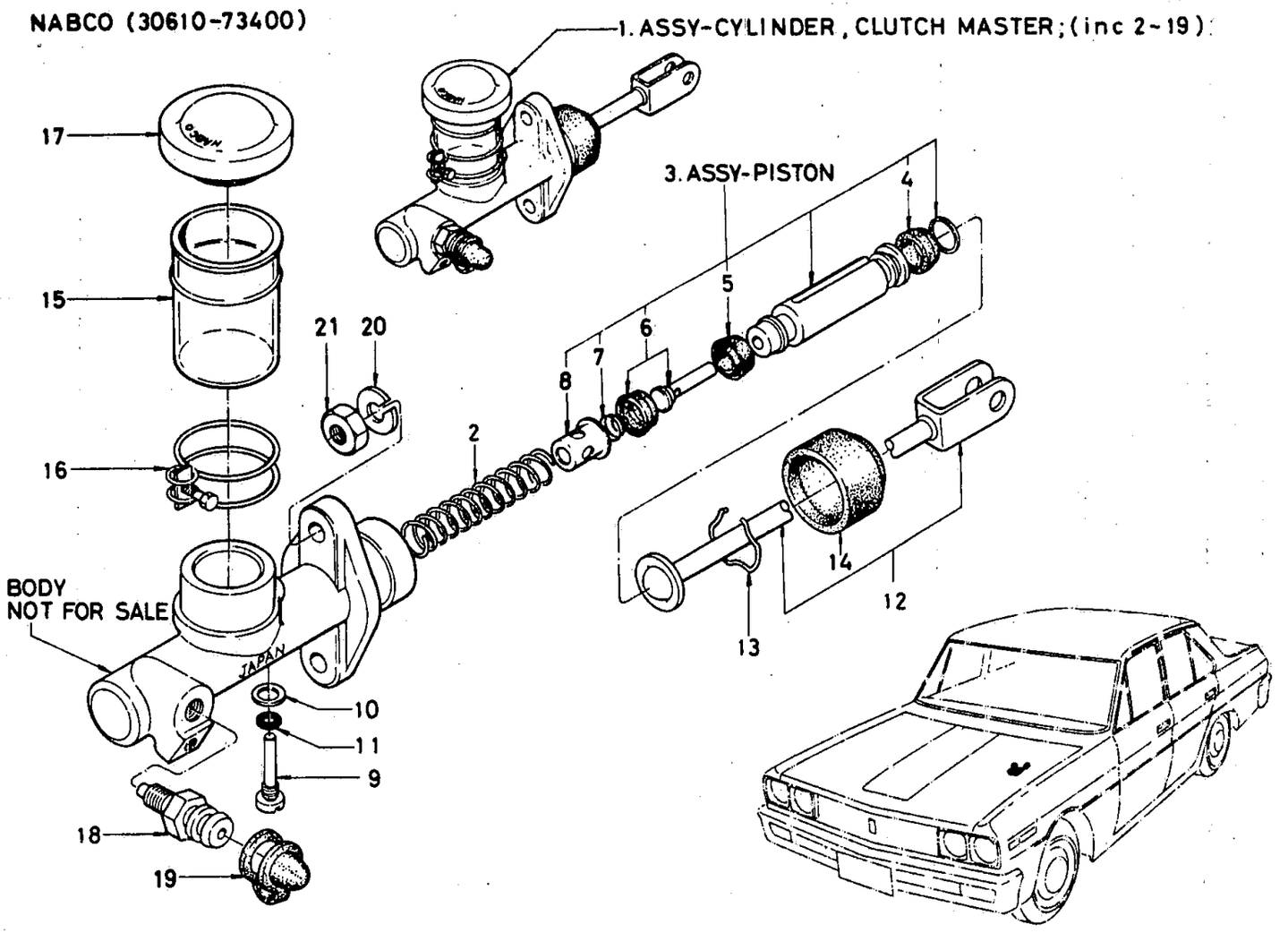

© 1972 NISSAN MOTOR CO., LTD.

REVISED: DECEMBER, 1972

PRINTED IN JAPAN

CLUTCH MASTER CYLINDER (NABCO)

S	KEY NO.	PART NO.	DESCRIPTION	Q'TY	UNIT PKG FOR DIST.	APPLIED MODEL	APPLIED DATE FROM	APPLIED DATE UP TO	ICA N	ICA F	SUPERSEDED
	101	- 30610-73400	ASSY-CYLINDER CLUTCH MASTER (NABCO)	1	1	MANUAL L23 L24 R DRIVE					
	201	- 46061-30000	SPRING-PISTON	1	5	MANUAL L23 L24 R DRIVE					
	301	- 46076-08700	ASSY-PISTON CLUTCH MASTER	1	1	MANUAL L23 L24 R DRIVE					
	401	- 46065-15800	CUP-WITH RING PISTON SECONDARY	1	10	MANUAL L23 L24 R DRIVE					
	501	- 46064-30002	CUP-PISTON PRIMARY	1	10	MANUAL L23 L24 R DRIVE					
	601	- 46073-30800	ASSY-VALVE INLET	1	10	MANUAL L23 L24 R DRIVE					
	701	- 46056-27260	SPRING-VALVE INLET	1	10	MANUAL L23 L24 R DRIVE					
	801	- 46076-30800	RETAINER-SPRING	1	10	MANUAL L23 L24 R DRIVE					
	901	- 46032-27260	SCREW-STOPPER	1	10	MANUAL L23 L24 R DRIVE					
	1001	- 46043-27260	PACKING	1	50	MANUAL L23 L24 R DRIVE					
	1101	- 46079-27260	RING-'O'	1	10	MANUAL L23 L24 R DRIVE					
	1201	- 30631-73400	ASSY-ROD PUSH	1	5	MANUAL L23 L24 R DRIVE					
	1301	- 46070-27260	RING-'O'	1	50	MANUAL L23 L24 R DRIVE					
*	1401	- 46084-18900	BOOT	1	10	MANUAL L23 L24 R DRIVE					
	02	- 46100-27260	BOOT	1	10	MANUAL L23 L24 R DRIVE			Y	N	46084-18900

NOTE:

© 1972 NISSAN MOTOR CO., LTD.

PRINTED IN JAPAN

CLUTCH MASTER CYLINDER (NABCO)

S	KEY NO.	PART NO.	DESCRIPTION	Q'TY	UNIT PKG FOR DIST.	APPLIED MODEL	APPLIED DATE FROM	APPLIED DATE UP TO	ICA N	ICA F	SUPERSEDED
	1501	46090-10600	RESERVOIR-BRAKE OIL	1	1	MANUAL L23 L24 R DRIVE					
*	1601	46016-12200	ASSY-BAND OIL RESERVOIR	1	5	MANUAL L23 L24 R DRIVE					
	02	46016-14600	ASSY-BAND OIL RESERVOIR	1	5	MANUAL L23 L24 R DRIVE			Y	N	46016-12200
*	1701	46020-28600	SET-CAP OIL RESERVOIR	1	5	MANUAL L23 L24 R DRIVE			Y	N	46020-28600
	02	46020-R0100	SET-CAP OIL RESERVOIR	1	1	MANUAL L23 L24 R DRIVE			Y	N	46020-28600
	03	46020-E0300	SET-CAP OIL RESERVOIR	1	10	MANUAL L23 L24 R DRIVE					
	1801	41128-75000	SCREW-BLEEDER	1	10	MANUAL L23 L24 R DRIVE			Y	N	41128-75010
	1901	41129-30001	CAP-BLEEDER	1	10	MANUAL L23 L24 R DRIVE					
	2001	00915-21510	WASHER-LOCK FIXING CLUTCH MASTER CYLINDER	2	50	MANUAL L23 L24 R DRIVE					
	2101	00911-14510	NUT-FIXING CLUTCH MASTER CYLINDER	2	50	MANUAL L23 L24 R DRIVE					

NOTE:

© 1972 NISSAN MOTOR CO., LTD.

REVISED: DECEMBER, 1972
PRINTED IN JAPAN

NOTE

Printed in Japan

NISSAN MOTOR CO., LTD.

CLUTCH MASTER CYLINDER (TOKICO)

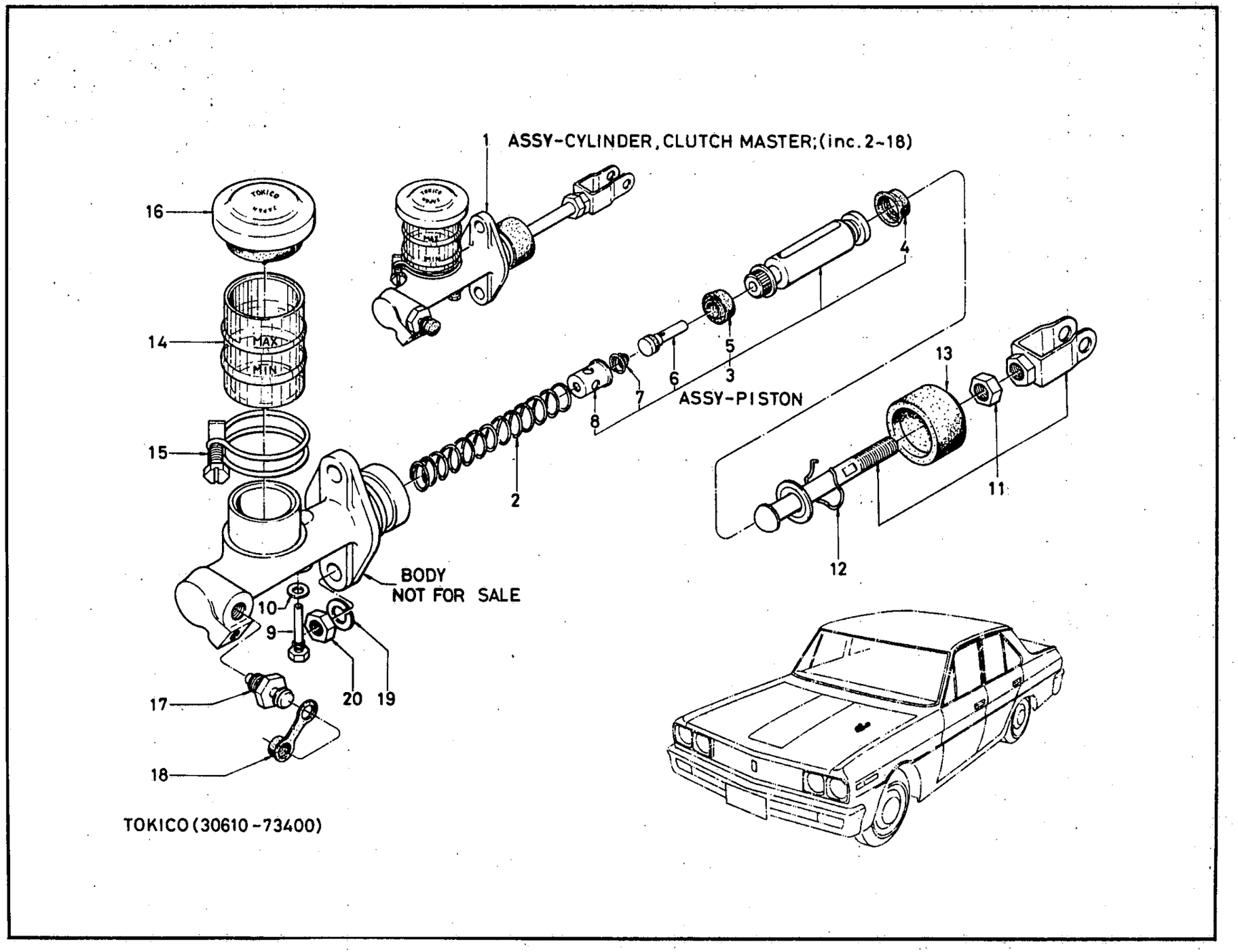

© 1972 NISSAN MOTOR CO., LTD.

REVISED: DECEMBER, 1972

PRINTED IN JAPAN

NISSAN

CLUTCH MASTER CYLINDER (TOKICO)

S	KEY NO.	PART NO.	DESCRIPTION	QTY	UNIT PKG FOR DIST.	APPLIED MODEL	APPLIED DATE FROM	APPLIED DATE UP TO	ICA N	ICA F	SUPERSEDED
	101	30610-73400	ASSY-CYLINDER CLUTCH MASTER (TOKICO)	1	1	MANUAL L23 L24 R DRIVE					
	201	46061-30000	SPRING-PISTON	1	5	MANUAL L23 L24 R DRIVE					
	301	46077-08710	ASSY-PISTON CLUTCH MASTER	1	5	MANUAL L23 L24 R DRIVE					
	401	46065-10610	CUP-WITH RING PISTON SECONDARY	1	10	MANUAL L23 L24 R DRIVE					
	501	46064-10610	CUP-PISTON PRIMARY	1	10	MANUAL L23 L24 R DRIVE					
	601	46073-10610	ASSY-VALVE INLET	1	10	MANUAL L23 L24 R DRIVE					
	701	46056-27260	SPRING-VALVE INLET	1	10	MANUAL L23 L24 R DRIVE					
	801	46076-30800	RETAINER-SPRING	1	10	MANUAL L23 L24 R DRIVE					
	901	46032-10610	SCREW-STOPPER	1	10	MANUAL L23 L24 R DRIVE					
	1001	46079-10610	PACKING	1	10	MANUAL L23 L24 R DRIVE					
	1101	30631-73410	ASSY-ROD PUSH	1	5	MANUAL L23 L24 R DRIVE					
	1201	46070-27260	RING-SNAP	1	50	MANUAL L23 L24 R DRIVE					
	1301	46100-27260	COVER-DUST	1	10	MANUAL L23 L24 R DRIVE					
	1401	46090-10610	RESERVOIR-BRAKE OIL	1	1	MANUAL L23 L24 R DRIVE					
	1501	46016-10610	ASSY-BAND OIL RESERVOIR	1	5	MANUAL L23 L24 R DRIVE					

NOTE:

© 1972 NISSAN MOTOR CO., LTD.

PRINTED IN JAPAN

CLUTCH MASTER CYLINDER (TOKICO)

S	KEY NO.	PART NO.	DESCRIPTION	QTY	UNIT PKG FOR DIST.	APPLIED MODEL	APPLIED DATE FROM	APPLIED DATE UP TO	ICA N	ICA F	SUPERSEDED
	1601	46020-10611	SET-CAP OIL RESERVOIR	1	5	MANUAL L23 L24 R DRIVE					
	1701	46041-10610	SCREW-BLEEDER	1	10	MANUAL L23 L24 R DRIVE					
	1801	41129-30001	CAP-BLEEDER	1	10	MANUAL L23 L24 R DRIVE					
	1901	00915-21510	WASHER-LOCK FIXING CLUTCH MASTER CYLINDER	2	50	MANUAL L23 L24 R DRIVE					
	2001	00911-14510	NUT-FIXING CLUTCH MASTER CYLINDER	2	50	MANUAL L23 L24 R DRIVE					

NOTE:

© 1972 NISSAN MOTOR CO., LTD.

REVISED: DECEMBER, 1972

ILLUSTRATION 163 A

PRINTED IN JAPAN

C

NOTE

Printed in Japan

NISSAN MOTOR CO., LTD.

CLUTCH MASTER CYLINDER (NABCO)

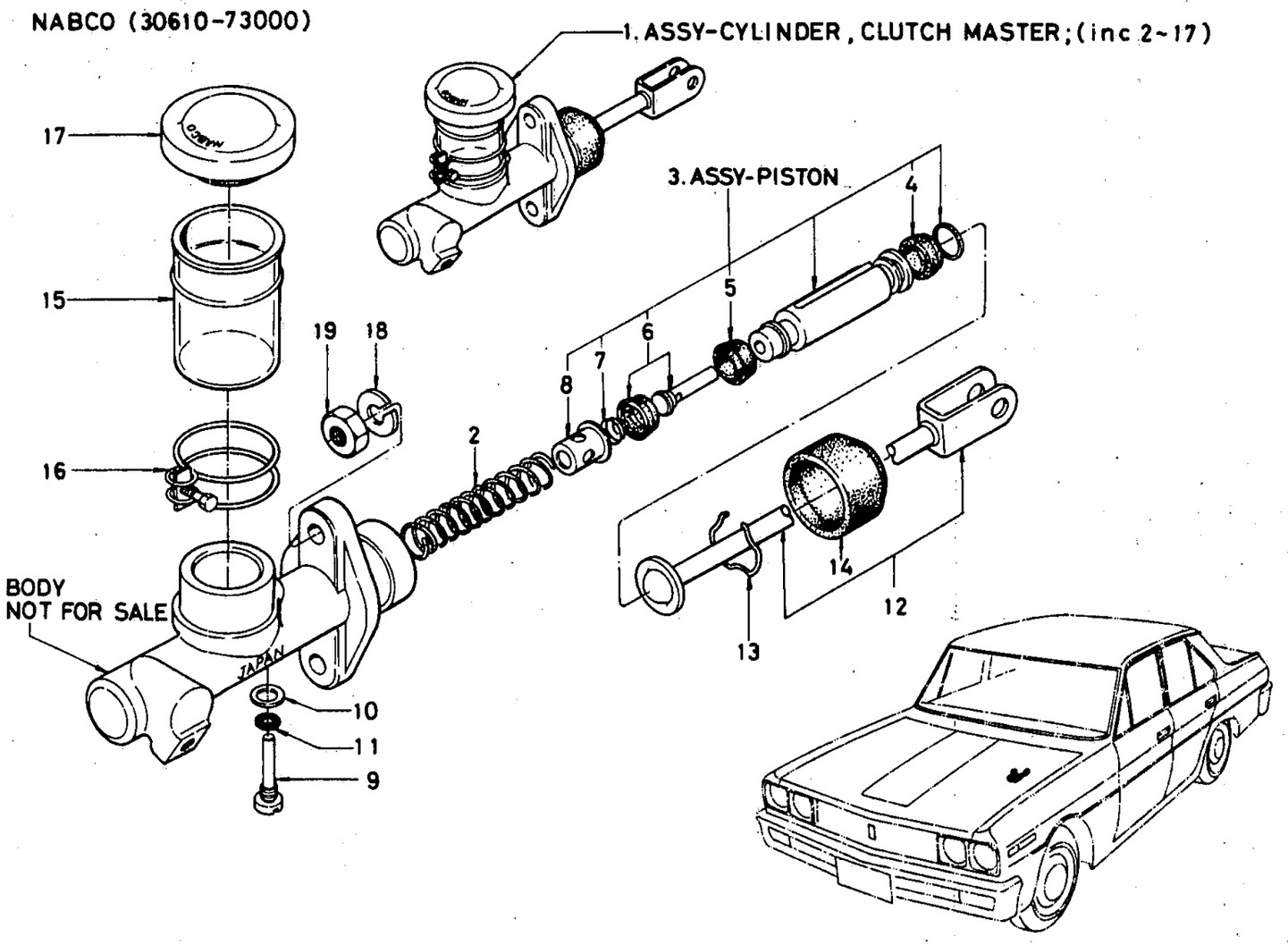

ILLUSTRATION **163 B**

© 1972 NISSAN MOTOR CO., LTD.

REVISED: DECEMBER, 1972

PRINTED IN JAPAN

CLUTCH MASTER CYLINDER (NABCO)

S	KEY NO.	PART NO.	DESCRIPTION	Q'TY	UNIT PKG FOR DIST.	APPLIED MODEL	APPLIED DATE FROM	APPLIED DATE UP TO	ICA N	ICA F	SUPERSEDED
	101	30610-73000	ASSY-CYLINDER CLUTCH MASTER (NABCO)	1	1	MANUAL R DRIVE EXC L23		0969			
	02	30610-E3201	ASSY-CYLINDER CLUTCH MASTER (NABCO)	1	1	MANUAL R DRIVE	1069		Y	N	30610-E3200
	201	46061-30000	SPRING-PISTON	1	5	MANUAL R DRIVE EXC L23					
	301	46076-08700	ASSY-PISTON CLUTCH MASTER	1	1	MANUAL R DRIVE EXC L23					
	401	46065-15800	CUP-WITH RING PISTON	1	10	MANUAL R DRIVE EXC L23					
	501	46064-30002	CUP-PISTON PRIMARY	1	10	MANUAL R DRIVE EXC L23					
	601	46073-30800	ASSY-VALVE INLET	1	10	MANUAL R DRIVE EXC L23					
	701	46056-27260	SPRING-VALVE INLET	1	10	MANUAL R DRIVE EXC L23					
	801	46076-30800	RETAINER-SPRING	1	10	MANUAL R DRIVE EXC L23					
	901	46032-27260	SCREW-STOPPER	1	10	MANUAL R DRIVE EXC L23					
	1001	46043-27260	PACKING	1	50	MANUAL R DRIVE EXC L23					
	1101	46079-27260	RING-'O'	1	10	MANUAL R DRIVE EXC L23					
	1201	30631-73400	ASSY-ROD PUSH	1	5	MANUAL R DRIVE EXC L23					
	1301	46070-27260	RING-SNAP	1	50	MANUAL R DRIVE EXC L23					
*	1401	46084-18900	BOOT	1	10	MANUAL R DRIVE EXC L23					

NOTE:

© 1972 NISSAN MOTOR CO., LTD.

PRINTED IN JAPAN

CLUTCH MASTER CYLINDER (NABCO)

S	KEY NO.	PART NO.	DESCRIPTION	Q'TY	UNIT PKG FOR DIST.	APPLIED MODEL	APPLIED DATE FROM	APPLIED DATE UP TO	ICA N	ICA F	SUPERSEDED
	1402	- 46100-27260	BOOT	1	10	MANUAL R DRIVE EXC L23			Y	N	46084-18900
	1501	- 46090-10600	RESERVOIR-BRAKE OIL	1	1	MANUAL R DRIVE EXC L23					
*	1601	- 46016-12200	ASSY-BAND	1	5	MANUAL R DRIVE EXC L23					
	02	- 46016-14600	ASSY-BAND	1	5	MANUAL R DRIVE EXC L23			Y	N	46016-12200
*	1701	- 46020-28600	SET-CAP OIL RESERVOIR	1	5	MANUAL R DRIVE EXC L23			Y	N	46020-18000
	02	- 46020-R0100	SET-CAP OIL RESERVOIR	1	1	MANUAL R DRIVE EXC L23		0969	Y	N	46020-28600
	03	- 46020-E0300	SET-CAP OIL RESERVOIR	1	10	MANUAL R DRIVE EXC L23					
	1801	- 00915-21510	WASHER-LOCK FIXING CLUTCH MASTER CYLINDER	2	50	MANUAL R DRIVE EXC L23					
	1901	- 00911-14510	NUT-FIXING CLUTCH MASTER CYLINDER	2	50	MANUAL R DRIVE EXC L23					

NOTE:

© 1972 NISSAN MOTOR CO., LTD.

REVISED: DECEMBER, 1972
PRINTED IN JAPAN

NOTE

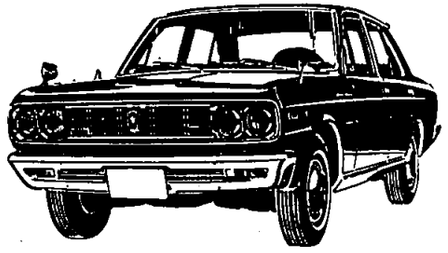

Printed in Japan

NISSAN MOTOR CO., LTD.

CLUTCH MASTER CYLINDER (TOKICO)

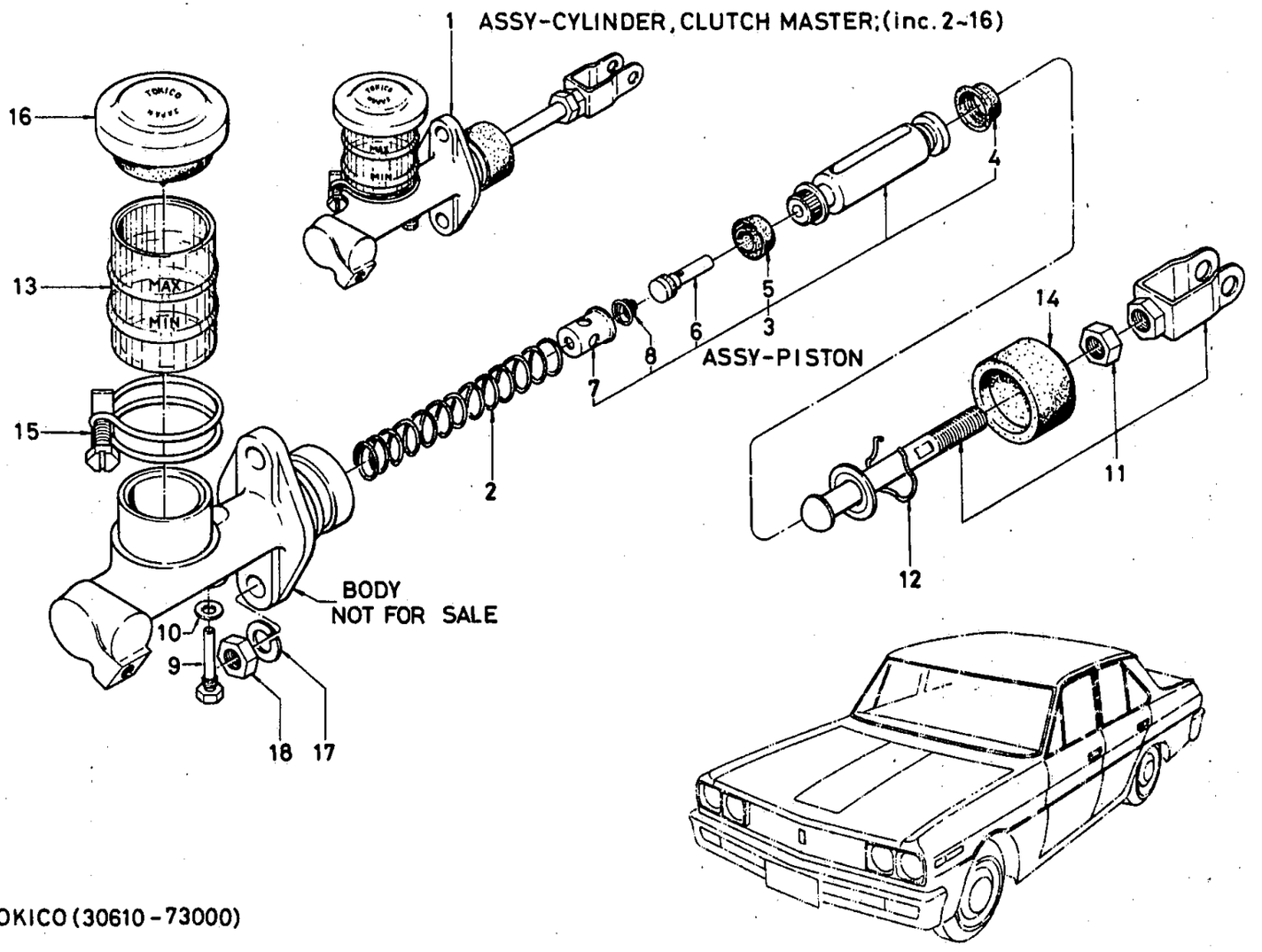

TOKICO (30610-73000)

© 1972 NISSAN MOTOR CO., LTD.

REVISED: DECEMBER, 1972

PRINTED IN JAPAN

NISSAN

CLUTCH MASTER CYLINDER (TOKICO)

S	KEY NO.	PART NO.	DESCRIPTION	QTY	UNIT PKG FOR DIST.	APPLIED MODEL	APPLIED DATE FROM	APPLIED DATE UP TO	ICA N	ICA F	SUPERSEDED
	101	30610-73000	ASSY-CYLINDER CLUTCH MASTER (TOKICO)	1	1	MANUAL R DRIVE EXC L23		0969			
	02	30610-E3201	ASSY-CYLINDER CLUTCH MASTER (TOKICO)	1	1	MANUAL R DRIVE	1069				
	201	46061-30000	SPRING-PISTON	1	5	MANUAL R DRIVE EXC L23			Y	N	30610-E3200
	301	46077-08710	ASSY-PISTON CLUTCH MASTER	1	5	MANUAL R DRIVE EXC L23					
	401	46065-10610	CUP-PISTON SECONDARY	1	10	MANUAL R DRIVE EXC L23					
	501	46064-10610	CUP-PISTON PRIMARY	1	10	MANUAL R DRIVE EXC L23					
	601	46073-10610	ASSY-VALVE INLET	1	10	MANUAL R DRIVE EXC L23					
	701	46076-30800	RETAINER-SPRING	1	10	MANUAL R DRIVE EXC L23					
	801	46056-27260	SPRING-VALVE INLET	1	10	MANUAL R DRIVE EXC L23					
	901	46032-10610	SCREW-STOPPER	1	10	MANUAL R DRIVE EXC L23					
	1001	46079-10610	PACKING	1	10	MANUAL R DRIVE EXC L23					
	1101	30631-73410	ASSY-ROD PUSH	1	5	MANUAL R DRIVE EXC L23					
	1201	46070-27260	RING-SNAP	1	50	MANUAL R DRIVE EXC L23					
	1301	46090-10610	RESERVOIR-BRAKE OIL	1	1	MANUAL R DRIVE EXC L23					
	1401	46100-27260	COVER-DUST	1	10	MANUAL R DRIVE EXC L23					

NOTE:

© 1972 NISSAN MOTOR CO., LTD.

PRINTED IN JAPAN

CLUTCH MASTER CYLINDER (TOKICO)

S	KEY NO.	PART NO.	DESCRIPTION	QTY	UNIT PKG FOR DIST.	APPLIED MODEL	APPLIED DATE FROM	APPLIED DATE UP TO	ICA N	ICA F	SUPERSEDED
	1501	- 46016-10610	ASSY-BAND OIL RESERVOIR	1	5	MANUAL R DRIVE EXC L23					
	1601	- 46020-10611	SET-CAP OIL RESERVOIR	1	5	MANUAL R DRIVE EXC L23					
	1701	- 00915-21510	WASHER-LOCK FIXING CLUTCH MASTER CYLINDER	2	50	MANUAL R DRIVE EXC L23					
	1801	- 00911-14510	NUT-FIXING CLUTCH MASTER CYLINDER	2	50	MANUAL R DRIVE EXC L23					

NOTE:

© 1972 NISSAN MOTOR CO., LTD.

REVISED: DECEMBER, 1972

PRINTED IN JAPAN

NOTE

Printed in Japan

NISSAN MOTOR CO., LTD.

CLUTCH MASTER CYLINDER (NABCO)

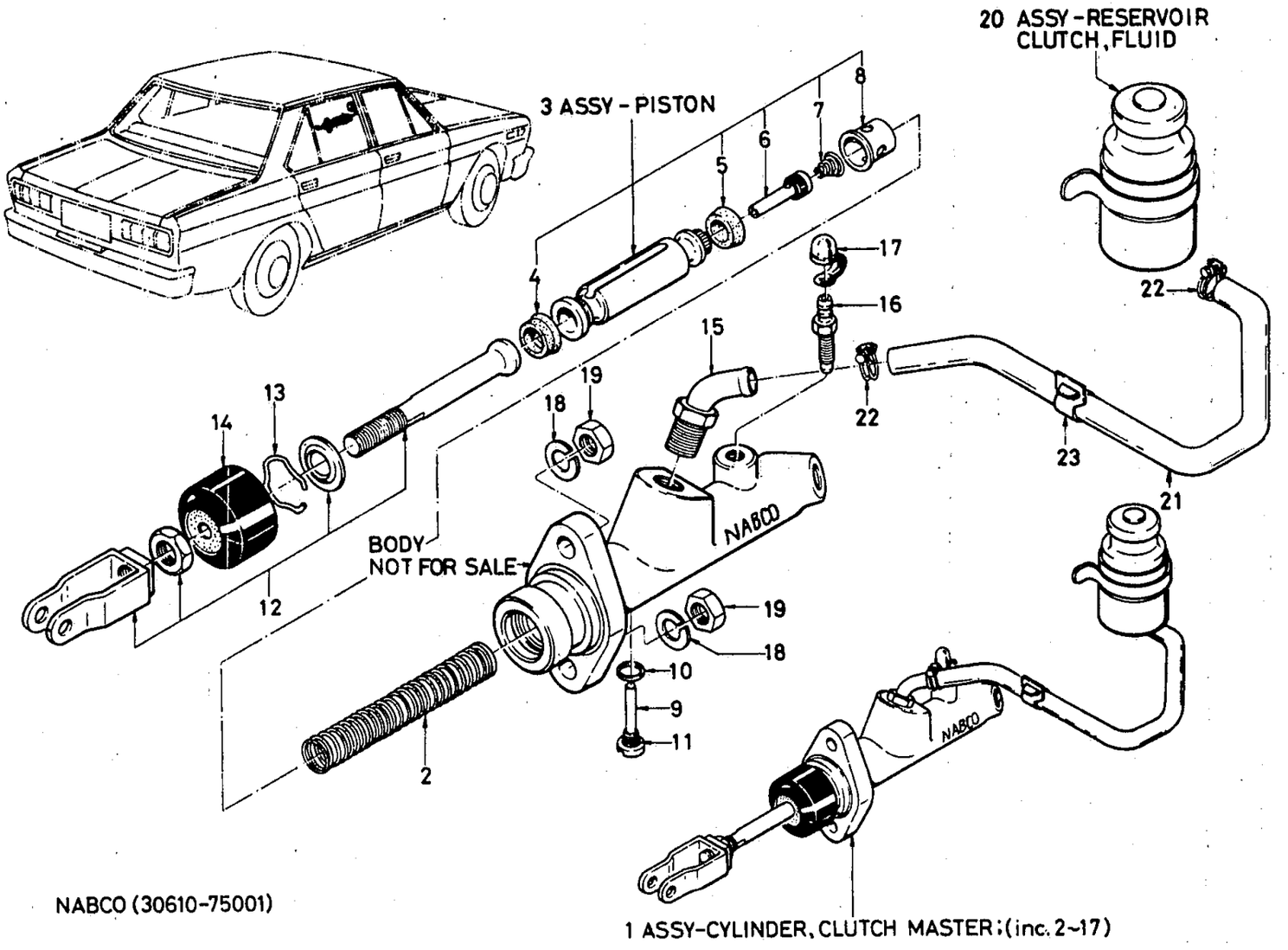

© 1972 NISSAN MOTOR CO., LTD.

REVISED: DECEMBER, 1972

PRINTED IN JAPAN

CLUTCH MASTER CYLINDER (NABCO)

S	KEY NO.	PART NO.	DESCRIPTION	QTY	UNIT PKG FOR DIST.	APPLIED MODEL	APPLIED DATE FROM	APPLIED DATE UP TO	ICA N	ICA F	SUPERSEDED
	101	30610-75001	ASSY-CYLINDER CLUTCH MASTER (NABCO)	1	1	MANUAL L DRIVE					
*	02	30610-E3700	ASSY-CYLINDER CLUTCH MASTER (NABCO)	1		MANUAL L DRIVE					
	03	30610-75001	ASSY-CYLINDER CLUTCH MASTER (NABCO)	1	1	MANUAL L DRIVE			Y	N	30610-E3700
	201	46061-30000	SPRING-PISTON	1	5	MANUAL L DRIVE					
	301	46076-08700	ASSY-PISTON CLUTCH MASTER	1	1	MANUAL L DRIVE					
	401	46065-15800	CUP-PISTON SECONDARY	1	10	MANUAL L DRIVE					
	501	46064-30002	CUP-PISTON PRIMARY	1	10	MANUAL L DRIVE					
	601	46073-30800	ASSY-VALVE INLET	1	10	MANUAL L DRIVE					
	701	46056-27260	SPRING-VALVE	1	10	MANUAL L DRIVE					
	801	46076-30800	SEAT-SPRING	1	10	MANUAL L DRIVE					
	901	46032-27260	SCREW-STOPPER PISTON	1	10	MANUAL L DRIVE					
	1001	46043-27260	PACKING	1	50	MANUAL L DRIVE					
	1101	46079-27260	RING-'O'	1	10	MANUAL L DRIVE					
	1201	30631-75000	ASSY-ROD PUSH	1		MANUAL L DRIVE					
	1301	46070-27260	RING-STOPPER	1	50	MANUAL L DRIVE					
*	1401	46084-18900	COVER-DUST	1	10	MANUAL L DRIVE					
	02	46100-27260	COVER-DUST	1	10	MANUAL L DRIVE			Y	N	46084-18900
*	1501	46021-30100	NUT-UNION	1		MANUAL L DRIVE					
	02	46020-76001	NUT-UNION	1	5	MANUAL L DRIVE			Y	N	46021-30100
	1601	41128-75000	SCREW-BLEEDER	1	10	MANUAL L DRIVE					
	1701	41129-30001	CAP-BLEEDER	1	10	MANUAL L DRIVE					

NOTE:

© 1972 NISSAN MOTOR CO., LTD.

PRINTED IN JAPAN

CLUTCH MASTER CYLINDER (NABCO)

S	KEY NO.	PART NO.	DESCRIPTION	QTY	UNIT PKG FOR DIST.	APPLIED MODEL	APPLIED DATE FROM	APPLIED DATE UP TO	ICA N	ICA F	SUPERSEDED
	18D1	00915-21510	WASHER-LOCK FIXING CLUTCH MASTER CYLINDER	2	50	MANUAL L DRIVE			Y	N	00915-21510
	19D1	00911-14510	NUT-FIXING CLUTCH MASTER CYLINDER	2	50	MANUAL L DRIVE					
	20D1	30615-75000	ASSY-RESERVOIR CLUTCH FLUID	1	1	MANUAL L DRIVE					
	21D1	30616-E1300	TUBE-FILLER CLUTCH FLUID	1	5	MANUAL L DRIVE					
	22D1	30617-75002	CLAMP-HOSE	2	10	MANUAL L DRIVE					
	23D1	24220-89938	CLIP-TUBE FILLER	1	10	MANUAL L DRIVE					

NOTE:

© 1972 NISSAN MOTOR CO., LTD.

REVISED: DECEMBER, 1972
PRINTED IN JAPAN

NOTE

Printed in Japan

NISSAN MOTOR CO., LTD.

TRANSMISSION ASSEMBLY ('69 YEAR MODEL)

L DRIVE		
T/M / MODEL	R3W71A SPEEDO METER GEAR RATIO / FINAL GEAR RATIO	R4W71A SPEEDO METER GEAR RATIO / FINAL GEAR RATIO
SUPER P-2300	32010-69955 17:5/4.111	—
P-2000 DELUXE WAGON	32010-78353 17:5/4.111	—
STANDARD DIESEL	32010-78451 17:5/4.111	—
VAN	—	32010-78831 17:5/4.375
L23 (HIGH SPEED AREA) OP L23	—	32010-78432 16:5/3.889
OP L23	—	32010-69950 17:5/4.111
OP STD	32010-78450 18:5/4.375	—

R DRIVE		
T/M / MODEL	R3W71A SPEEDO METER GEAR RATIO / FINAL GEAR RATIO	R4W71A SPEEDO METER GEAR RATIO / FINAL GEAR RATIO
SUPER P-2300	32010-69855 17:5/4.111	—
P-2000	32010-78051 18:5/4.375	—
DELUXE WAGON	32010-78053 17:5/4.111	—
STANDARD OP DIESEL	32010-78250 18:5/4.375	—
DIESEL OP STD	32010-78251 17:5/4.111	—
VAN	—	32010-78030 18:5/4.375
G-UX(RD) OP L23	—	32010-69851 16:5/3.889

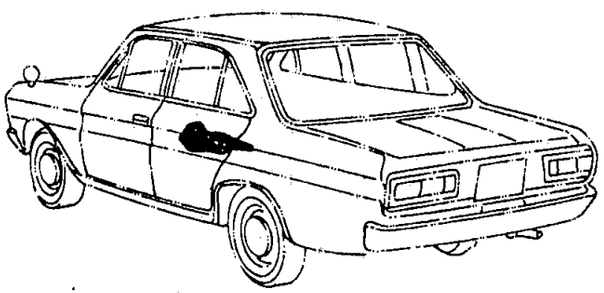

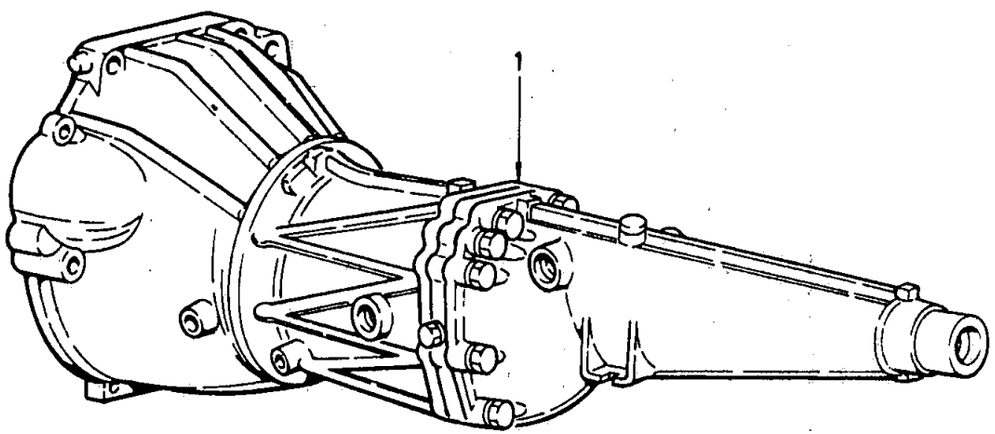

© 1972 NISSAN MOTOR CO., LTD.

REVISED: DECEMBER, 1972

PRINTED IN JAPAN

C

TRANSMISSION ASSEMBLY ('69 YEAR MODEL)

S	KEY NO.	PART NO.	DESCRIPTION	Q'TY	UNIT PKG FOR DIST.	APPLIED MODEL	APPLIED DATE FROM	APPLIED DATE UP TO	ICA N	ICA F	SUPERSEDED
	101	32010-69855	ASSY-TRANSMISSION R3W71A S/G RATIO 17:5 FINAL 4.111	1	1	L23 R DRIVE		0969			
	02	32010-69955	ASSY-TRANSMISSION R3W71A S/G RATIO 17:5 FINAL 4.111	1	1	L23 L DRIVE		0969			
	03	32010-69951	ASSY-TRANSMISSION R4W71A S/G RATIO 16:5 FINAL 3.889	1	1	L23 LD HIGH SPEED AREA OP L23 LD		0969			
	04	32010-78432	ASSY-TRANSMISSION R4W71A S/G RATIO 16:5 FINAL 3.889	1	10	L23 LD HIGH SPEED AREA OP L23,LD		0969	Y	N	32010-69951
	05	32010-E3056	ASSY-TRANSMISSION R3W71A S/G RATIO 19:6 FINAL 4.111	1	1	CUSTOM P-DX2400 R DRIVE	1069		Y	N	32010-E3051
	06	32010-69851	ASSY-TRANSMISSION R4W71A S/G RATIO 16:5 FINAL 3.889	1	1	G-UX(RD) OP L23 R DRIVE		0969			
	07	32010-69950	ASSY-TRANSMISSION R4W71A S/G RATIO 17:5 FINAL 4.111	1	1	OP L23 L DRIVE		0969			
	08	32010-78053	ASSY-TRANSMISSION R4W71A S/G RATIO 17:5	1	1	DELUXE WAGON RD		0969			
	09	32010-78353	ASSY-TRANSMISSION R3W71A S/G RATIO 17:5 FINAL 4.111	1	1	J20 LD EXC VAN		0969			
	10	32010-78051	ASSY-TRANSMISSION R3W71A S/G RATIO 18:5 FINAL 4.375	1	1	P-2000 R DRIVE		0969			
	11	32010-78250	ASSY-TRANSMISSION R3W71A S/G RATIO 18:5 FINAL 4.375	1	1	STD RD OP DIESEL R DRIVE		0969			
	12	32010-78451	ASSY-TRANSMISSION R3W71A S/G RATIO 17:5 FINAL 4.111	1	1	STD DIESEL LD		0969			
	13	32010-78450	ASSY-TRANSMISSION R3W71A S/G RATIO 18:5 FINAL 4.375	1	1	OP STD DIESEL LD		0969			
	14	32010-78251	ASSY-TRANSMISSION R3W71A S/G RATIO 17:5 FINAL 4.375	1	1	DIESEL R DRIVE OP STD R DRIVE		0969			
	15	32010-78030	ASSY-TRANSMISSION R3W71A S/G RATIO 18:5 FINAL 4.625	1	1	VAN R DRIVE		0969			

NOTE:

© 1972 NISSAN MOTOR CO., LTD.

PRINTED IN JAPAN

TRANSMISSION ASSEMBLY ('69 YEAR MODEL)

S	KEY NO.	PART NO.	DESCRIPTION	Q'TY	UNIT PKG FOR DIST.	APPLIED MODEL	APPLIED DATE FROM	APPLIED DATE UP TO	ICA N	ICA F	SUPERSEDED
	116	32010-78331	ASSY-TRANSMISSION R4W71A S/G RATIO 17:5 FINAL 4.375	1	1	VAN L DRIVE		0969			

NOTE:

© 1972 NISSAN MOTOR CO., LTD.

REVISED: DECEMBER, 1972

PRINTED IN JAPAN

C

NOTE

Printed in Japan

NISSAN MOTOR CO., LTD.

TRANSMISSION ASSEMBLY ('70 YEAR MODEL)

R DRIVE		
T/M / MODEL	R3W71A SPG RATIO/FINAL	4W71A SPG RATIO/FINAL
SUPER P-DX 2400	32010-E3150 19:6/4.111	—
CUSTOM P-DX 2000	32010-E3056 19:6/4.111	—
WAGON	—	32010-E3556 19:6/4.111
VAN-DX	—	32010-E3555 21:6/4.375
STD	—	32010-E3456 19:6/4.111
DIESEL	—	32010-E3456 19:6/4.111
G-UX	—	32010-E3145 19:6/4.111

L DRIVE		
T/M / MODEL	R3W71A (SPG RATIO/FINAL)	4W71A (SPG RATIO/FINAL)
SUPER P-DX 2400	32010-E3350 19:6/4.111	—
CUSTOM P-DX 2000	32010-E3651 19:6/4.111	—
WAGON	—	32010-E3857 19:6/4.111
VAN-DX	—	32010-E3855 21:6/4.375
STANDARD	—	32010-E3755 19:6/4.111
DIESEL	—	32010-E3755 19:6/4.111

SPG RATIO means "SPEEDOMETER GEAR RATIO"

HIGH SPEED AREA (L DRIVE)

T/M / MODEL	R4W71A
SUPER P-DX 2400 H/S AREA	32010-E3356 (18:6/3.889)
CUSTOM P-DX 2000 WAGON H/S AREA	32010-E3857 (19:6/4.111)

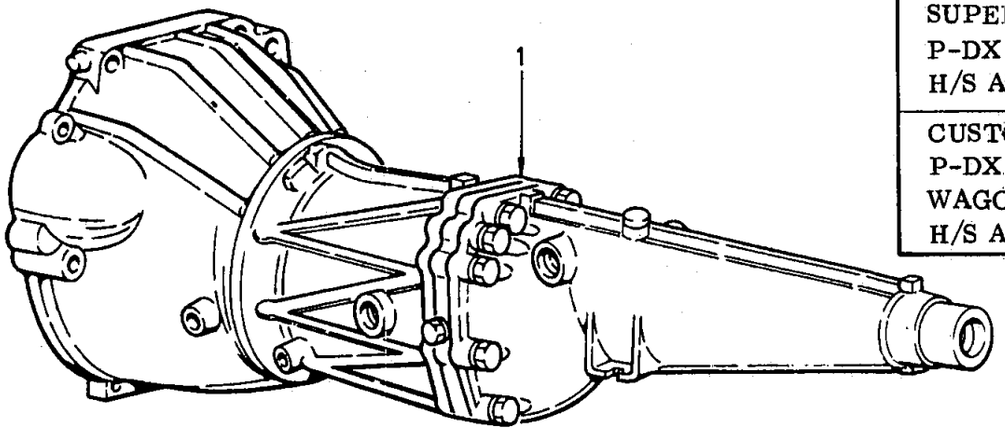

ILLUSTRATION **164 A**

© 1972 NISSAN MOTOR CO., LTD.

REVISED: DECEMBER, 1972

PRINTED IN JAPAN

TRANSMISSION ASSEMBLY ('70 YEAR MODEL)

S	KEY NO.	PART NO.	DESCRIPTION	QTY	UNIT PKG FOR DIST.	APPLIED MODEL	APPLIED DATE FROM	APPLIED DATE UP TO	ICA N	ICA F	SUPERSEDED
*	101	32010-E3150	ASSY-TRANSMISSION R3W71A S/G RATIO 19:6 FINAL 4.111	1	1	SUPER P-DX2400 R DRIVE	1069		N	N	32010-69855
	02	32010-E3135	ASSY-TRANSMISSION R3W71A S/G RATIO 19:6 FINAL 4.111	1	1	SUPER P-DX2400 R DRIVE	1069		Y	N	32010-E3150
	03	32010-E3350	ASSY-TRANSMISSION R3W71A S/G RATIO 19:6 FINAL 4.111	1	1	SUPER P-DX2400 L DRIVE	1069		N	N	32010-69951
*	04	32010-E3051	ASSY-TRANSMISSION R3W71A S/G RATIO 19:6 FINAL 4.111	1	1	CUSTOM P-DX2000 R DRIVE	1069		N	N	32010-78053
	05	32010-E3056	ASSY-TRANSMISSION R3W71A S/G 19:6 FINAL 4.111	1	1	CUSTOM P-DX2000 R DRIVE		0969	Y	N	32010-E3051
*	06	32010-E3651	ASSY-TRANSMISSION R3W71A S/G RATIO 19:6 FINAL 4.111	1	1	CUSTOM P-DX2000 L DRIVE	1069		N	N	32010-78351
	07	32010-E3655	ASSY-TRANSMISSION R3W71A S/G RATIO 19:6 FINAL 4.111	1	1	CUSTOM P-DX2000 L DRIVE	1069		Y	N	32010-E3651
*	08	32010-E3556	ASSY-TRANSMISSION R4W71A S/G RATIO 19:6 FINAL 4.111	1	1	WAGON R DRIVE	1069				
	09	32010-E3536	ASSY-TRANSMISSION R4W71A S/G RATIO 19:6 FINAL 4.111	1	1	WAGON R DRIVE	1069		Y	N	32010-E3556
*	10	32010-E3857	ASSY-TRANSMISSION R4W71A S/G RATIO 19:6 FINAL 4.111	1	1	WAGON L DRIVE	1069				
	11	32010-E3836	ASSY-TRANSMISSION R4W71A S/G RATIO 19:6 FINAL 4.111	1	1	WAGON L DRIVE	1069		Y	N	32010-E3857
*	12	32010-E3155	ASSY-TRANSMISSION R4W71A S/G RATIO 19:6 FINAL 4.111	1	1	G-UX(R DRIVE)	1069		N	N	32010-69850
	13	32010-E3145	ASSY-TRANSMISSION R4W71A S/G RATIO 19:6 FINAL 4.111	1	1	G-UX(DRIVE)	1069		Y	N	32010-E3155
*	14	32010-E3356	ASSY-TRANSMISSION R4W71A S/G RATIO 19:6 FINAL 4.111	1	1	SUPER P-DX2400 HIGH SPEED AREA	1069		N	N	32010-69951
	15	32010-E3335	ASSY-TRANSMISSION R4W71A S/G RATIO 19:6 FINAL 4.111	1	1	SUPER P-DX2000 WAGON HIGH SPEED	1069		Y	N	32010-E3356

NOTE:

© 1972 NISSAN MOTOR CO., LTD.

PRINTED IN JAPAN

TRANSMISSION ASSEMBLY ('70 YEAR MODEL)

S	KEY NO.	PART NO.	DESCRIPTION	QTY	UNIT PKG FOR DIST.	APPLIED MODEL	APPLIED DATE FROM	APPLIED DATE UP TO	ICA N	ICA F	SUPERSEDED
•	116	32010-E3857	ASSY-TRANSMISSION R4W71A S/G RATIO 19:6 FINAL 4.111	1	1	CUSTOM P-DX2000 WAGON HIGH SPEED AREA	1069		N	N	32010-78332
	17	32010-E3836	ASSY-TRANSMISSION R4W71A S/G RATIO 19:6 FINAL 4.111	1	1	CUSTOM P-DX2000 WAGON HIGH SPEED AREA	1069		Y	N	32010-E3857
•	18	32010-E3555	ASSY-TRANSMISSION R4W71A S/G RATIO 21:6 FINAL 4.375	1	1	VAN-DX R DRIVE	1069		N	N	32010-78030
	19	32010-E3535	ASSY-TRANSMISSION R4W71A S/G RATIO 21:6 FINAL 4.375	1	1	SUPER P-DX2400 HIGH SPEED AREA	1069		Y	N	32010-E3556
•	20	32010-E3855	ASSY-TRANSMISSION R4W71A S/G RATIO 21:6 FINAL 4.375	1	1	VAN-DX L DRIVE	1069		N	N	32010-78331
	21	32010-E3835	ASSY-TRANSMISSION R4W71A S/G RATIO 21:6 FINAL 4.375	1	1	VAN-DX L DRIVE	1069		Y	N	32010-E3855
•	22	32010-E3456	ASSY-TRANSMISSION R4W71A S/G RATIO 19:6 FINAL 4.111	1	1	STD DIESEL RD	1069				
	23	32010-E3437	ASSY-TRANSMISSION R4W71A S/G RATIO 19:6 FINAL 4.111	1	1	STD DIESEL RD	1069		Y	N	32010-E3456
•	24	32010-E3755	ASSY-TRANSMISSION R4W71A S/G RATIO 19:6 FINAL 4.111	1	1	STD DIESEL LD	1069		N	N	32010-78450
	25	32010-E3735	ASSY-TRANSMISSION R4W71A S/G RATIO 19:6 FINAL 4.111	1	1	STD DIESEL LD	1069		Y	N	32010-E3755
•	26	32010-E3757	ASSY-TRANSMISSION R4W71A S/G RATIO 18:6 FINAL 3.889	1		OP STD DIESEL LD	1069				
	27	32010-E3736	ASSY-TRANSMISSION R4W71A S/G RATIO 18:6 FINAL 3.889	1	1	OP STD DIESEL LD	1069		Y	N	32010-E3757

NOTE:

© 1972 NISSAN MOTOR CO., LTD.

REVISED: DECEMBER, 1972
PRINTED IN JAPAN

NOTE

Printed in Japan

NISSAN MOTOR CO., LTD.

TRANSMISSION CASE, REAR EXTENSION & BLEATHER (3 SPEED) - R3W71A -

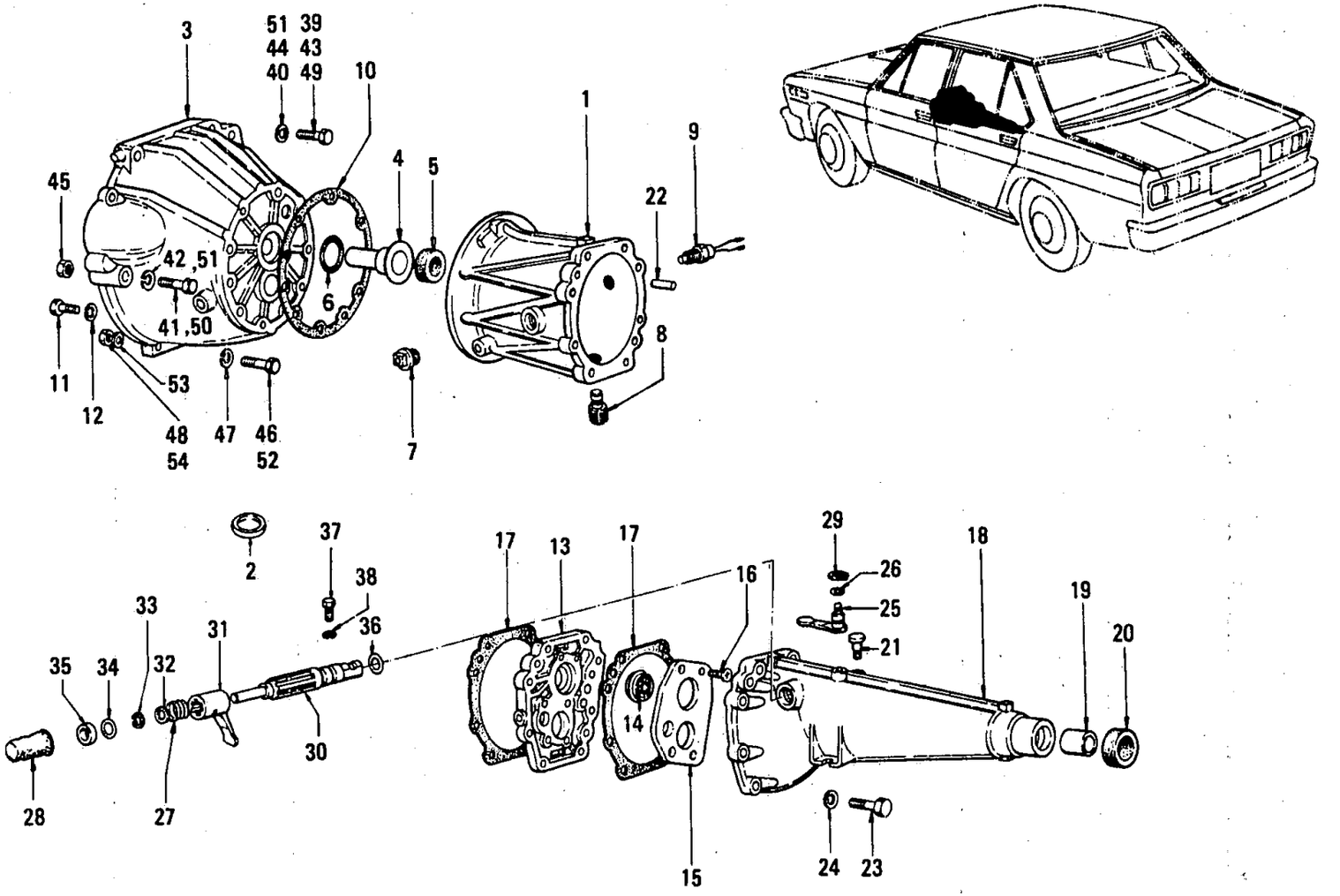

© 1972 NISSAN MOTOR CO., LTD.

REVISED: DECEMBER, 1972

PRINTED IN JAPAN

TRANSMISSION CASE, REAR EXTENSION & BLEATHER (3 SPEED) - R3W71A -

S	KEY NO.	PART NO.	DESCRIPTION	Q'TY	UNIT PKG FOR DIST.	APPLIED MODEL	APPLIED DATE FROM	APPLIED DATE UP TO	ICA N	ICA F	SUPERSEDED
*	101	32101-78002	CASE-TRANSMISSION	1	1	3 SPEED R DRIVE			Y	Y	32101-78201
	02	32101-P0500	CASE-TRANSMISSION	1	1	3 SPEED R DRIVE	1069		Y	N	32101-78002
*	03	32101-78302	CASE-TRANSMISSION	1	1	3 SPEED L DRIVE			Y	N	32101-7840
	04	32101-P1800	CASE-TRANSMISSION	1	1	3 SPEED L DRIVE	1069		Y	N	32101-78302
*	05	32101-78201	CASE-TRANSMISSION	1	1	STD DIESEL R DRIVE		0969			
*	06	32101-78401	CASE-TRANSMISSION	1	1	STD DIESEL R DRIVE		0969			
	201	30543-73900	BOOT-RUBBER	1	5	STD		0969			
	301	32805-78001	HOUSING-CLUTCH	1	1	4 SPEED L24 L20A R DRIVE	1069				
	02	30401-78100	HOUSING-CLUTCH	1	1	L23 R DRIVE		0969			
*	03	30401-E3600	HOUSING-CLUTCH	1	1	4 SPEED L24 L20A L DRIVE	1069				
	04	30401-P1700	HOUSING-CLUTCH	1	1	4 SPEED L24 L20A L DRIVE	1069		Y	N	30401-E3600
	05	30401-77900	HOUSING-CLUTCH	1	1	L23 L DRIVE		0969			
	06	30401-78001	HOUSING-CLUTCH	1	1	3 SPEED J20 R DRIVE		0969			
	07	30401-78002	HOUSING-CLUTCH	1	1	3 SPEED J20 R DRIVE		0969	Y	Y	30401-78001
	08	30401-78301	HOUSING-CLUTCH	1	1	3 SPEED J20 L DRIVE		0969			
	09	30401-78202	HOUSING-CLUTCH	1	1	STD DIESEL R DRIVE		0969			
	10	30401-78201	HOUSING-CLUTCH	1	1	STD DIESEL L DRIVE		0969			
	401	32110-78000	ASSY-COVER FRONT TRANSMISSION CASE	1	1	3 SPEED					

NOTE:

© 1972 NISSAN MOTOR CO., LTD.

PRINTED IN JAPAN

TRANSMISSION CASE, REAR EXTENSION & BLEATHER (3 SPEED) - R3W71A -

S	KEY NO.	PART NO.	DESCRIPTION	Q'TY	UNIT PKG FOR DIST.	APPLIED MODEL	APPLIED DATE FROM	APPLIED DATE UP TO	ICA N	ICA F	SUPERSEDED
	501	32114-20100	SEAL-OIL FRONT COVER	1	10	3 SPEED					
	601	32115-20100	RING-'O' FRONT COVER	1	10	3 SPEED					
	701	00931-11210	PLUG-LEVER & FILLER	1	10	3 SPEED					
	801	32103-14600	ASSY-PLUG DRAIN	1	5	3 SPEED					
	901	32005-21000	COMP-SWITCH REVERSE LAMP	1	1	3 SPEED					
	1001	32118-78000	GASKET-TRANSMISSION CASE CLUTCH HOUSING	1	10	3 SPEED					
	1101	08120-83210	BOLT-TRASMISSION TO CLUTCH HOUSING	10	50	3 SPEED					
	1201	08915-23810	WASHER-LOCK	10	50	3 SPEED					
	1301	32138-78000	PLATE-ADAPTER	1	1	3 SPEED					
	1401	32273-04100	BEARING-MAIN DRIVE	1	1	3 SPEED					
	1501	32139-20100	RETAINER-MAIN SHAFT BEARING	1	1	3 SPEED					
*	1601	08320-82010	SCREW	6	50	3 SPEED					
	02	08320-82012	SCREW	6	50	3 SPEED	1069		Y	N	08320-82010
	1701	32134-78000	GASKET-REAR EXTENSION	2	10	3 SPEED					
	1801	32130-78200	ASSY-EXTENSION REAR	1	1	3 SPEED					
*	02	32131-78251	ASSY-EXTENSION REAR	1	1	3 SPEED		0969	Y	N	32130-78200
	1901	32132-78000	BUSH-REAR EXTENSION	1	2	3 SPEED					
*	2001	32136-07200	SEAL-OIL REAR EXTENSION	1	10	3 SPEED					
	02	32136-E0100	SEAL-OIL REAR EXTENSION	1	5	3 SPEED		0969	Y	N	32136-07200
	2101	38322-78000	ASSY-BREATHER TRANSMISSION	1	5	3 SPEED					
	2201	32106-20100	DOWEL-TRANSMISSION ADAPTOR & EXTENSION	2	5	3 SPEED					

NOTE:

© 1972 NISSAN MOTOR CO., LTD.

REVISED: DECEMBER, 1972
PRINTED IN JAPAN
C

TRANSMISSION CASE, REAR EXTENSION & BLEATHER (3 SPEED) - R3W71A -

S	KEY NO.	PART NO.	DESCRIPTION	Q'TY	UNIT PKG FOR DIST.	APPLIED MODEL	APPLIED DATE FROM	APPLIED DATE UP TO	ICA N	ICA F	SUPERSEDED
	2301	08120-85010	BOLT-EXTENSION TO TRANSMISSION CASE	8	25	3 SPEED					
	2401	08915-23810	WASHER-LOCK	8	50	3 SPEED					
	2501	32880-78000	ASSY-LEVER SELECTOR	1	1	3 SPEED					
	2601	32884-78000	RING-'O' SELECTOR SHAFT	1	20	3 SPEED					
	2701	32894-E3201	ASSY-SPRING CROSS SHAFT	1	5	3 SPEED			Y	Y	32894-E3200
	2801	32891-E3201	BOOT-RUBBER CROSS SHAFT	1	10	3 SPEED			Y	Y	32891-E3200
	2901	00922-11400	RING-SNAP	1	50	3 SPEED					
	3001	32911-78000	SHAFT-CROSS CHANGE SPEED	1	1	3 SPEED					
	3101	32888-78002	LEVER-CHANG SPEED CROSS	1	1	3 SPEED					
	3201	32883-78200	WASHER-CROSS SHAFT	1	10	3 SPEED					
	3301	00922-11400	RING-SNAP	1	50	3 SPEED					
	3401	32858-14600	RING-'O'	1	10	3 SPEED					
	3501	32857-14600	CAP-'O' RING	1	10	3 SPEED					
	3601	32868-78000	RING-'O' CROSS SHAFT	1	20	3 SPEED					
	3701	32887-78000	SCREW-SET CROSS SHAFT	1		3 SPEED					
	3801	08915-13810	WASHER-LOCK	1	50	3 SPEED					
	3901	00131-66010	BOLT FIXING TRANSMISSION TO L23 ENGINE	4	25	L23		0969			
	4001	08915-24010	WASHER-LOCK FIXING T/M TO L23 ENGINE	4	50	L23		0969			
	4101	08110-61210	BOLT FIXING T/M TO L23 ENGINE	4	50	L23		0969			
	4201	08915-13610	WASHER-LOCK FIXING T/M TO L23 ENGINE	4	50	L23		0969			

NOTE:

© 1972 NISSAN MOTOR CO., LTD.

PRINTED IN JAPAN

TRANSMISSION CASE, REAR EXTENSION & BLEATHER (3 SPEED) - R3W71A -

S	KEY NO.	PART NO.	DESCRIPTION	Q'TY	UNIT PKG FOR DIST.	APPLIED MODEL	APPLIED DATE FROM	APPLIED DATE UP TO	ICA N	ICA F	SUPERSEDED
	4301	00134-66510	BOLT FIXING TRANSMISSION TO J20 ENGINE	4	25	J20		0969			
	4401	08915-24010	WASHER-LOCK FIXING T/M TO J20 ENGINE	4	50	J20		0969			
	4501	00911-24610	NUT FIXING TRANSMISSION TO J20 ENGINE	2	50	J20		0969			
	4601	08110-83510	BOLT FIXING TRANSMISSION TO J20 ENGINE	2	25	J20					
	4701	08915-13810	WASHER-LOCK FIXING T/M TO J20 ENGINE	2	50	J20		0969			
	4801	08911-10810	NUT FIXING TRANSMISSION TO J20 ENGINE	2	50	J20		0969			
	4901	08131-06010	BOLT FIXING T/M TO H20 SD22 ENGINE	2	25	H20 SD22		0969			
	5001	08131-06510	BOLT FIXING TRANSMISSION TO H20 SD22 ENGINE	2	10	H20 SD22		0969			
	5101	08915-24010	WASHER-LOCK FIXING T/M TO H20 SD22 ENGINE	4	50	H20 SD22		0969			
	5201	08110-82510	BOLT FIXING T/M TO H20 SD22 ENGINE	2	50	H20 SD22		0969			
*	02	32055-47600	BOLT FIXING T/M TO H20 SD22 ENGINE	2	5	H20 SD22			Y	N	08110-82510
	5301	08915-13810	WASHER-LOCK FIXING T/M TO H20 SD22 ENGINE	2	50	H20 SD22		0969			
	5401	08911-10810	NUT FIXING T/M TO H20 SD22 ENGINE	2	50	H20 SD22		0969			

NOTE:

© 1972 NISSAN MOTOR CO., LTD.

REVISED: DECEMBER, 1972
PRINTED IN JAPAN

NOTE

Printed in Japan

NISSAN MOTOR CO., LTD.

TRANSMISSION GEARS & SPEEDOMETER PINION (3 SPEED) - R3W71A -

FOR 3 SPEED PINION

PINION PART NO.	T/M PART NO. (3 SPEED T/M)	MODEL
32703-78103	32010-E3051	CUSTOM P-DX 2000 R DRIVE
	32010-E3651	CUSTOM P-DX 2000 L DRIVE
	32010-E3150	SUPER P-DX 2400 R DRIVE
	32010-E3350	SUPER P-DX 2400 L DRIVE

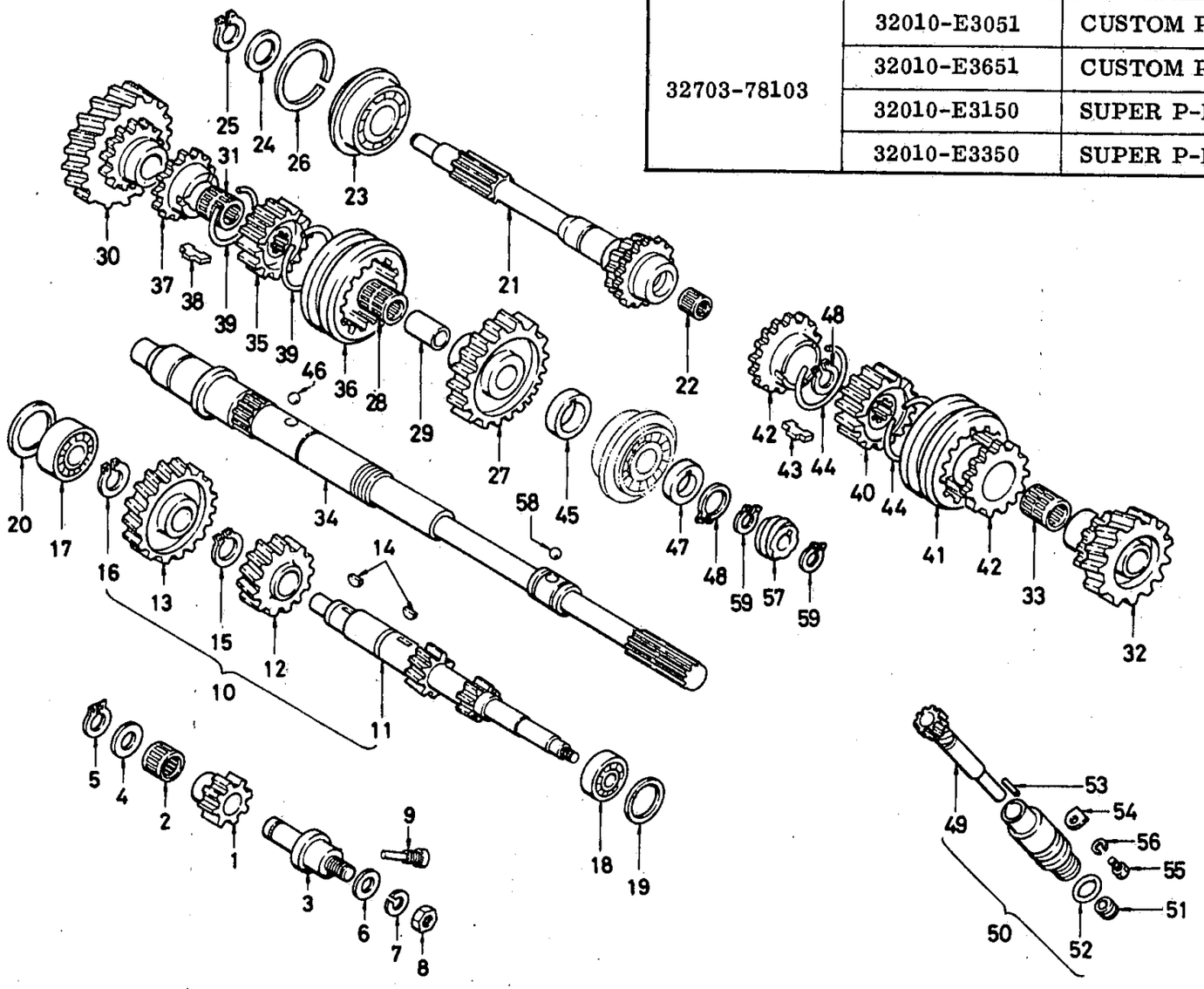

ILLUSTRATION **166**

© 1972 NISSAN MOTOR CO., LTD.

REVISED: DECEMBER, 1972

PRINTED IN JAPAN

TRANSMISSION GEARS, SPEEDOMETER PINION (3 SPEED) – R3W71A –

S	KEY NO.	PART NO.	DESCRIPTION	Q'TY	UNIT PKG FOR DIST.	APPLIED MODEL	APPLIED DATE FROM	APPLIED DATE UP TO	ICA N	ICA F	SUPERSEDED
	101	32282-78000	GEAR-REVERSE IDLER(17T)	1	1	3 SPEED					
	201	32272-36900	BEARING-NEEDLE	1	1	3 SPEED					
	301	32281-78000	SHAFT-REVERSE IDLER	1	1	3 SPEED					
	401	32284-78000	WASHER-THRUST REVERSE	1	5	3 SPEED					
	501	32285-20100	RING-SNAP REVERSE IDLER	1	5	3 SPEED					
	601	08915-44410	WASHER-PLAIN	1	50	3 SPEED					
	701	08915-14410	WASHER-LOCK	1	50	3 SPEED					
*	801	08911-34410	NUT REVERSE IDLER SHAFT	1	50	3 SPEED					
	02	01211-00011	NUT REVERSE IDLER SHAFT	1	50	3 SPEED		0969	Y	N	08911-34410
	901	32290-78000	SCREW-SET REVERSE IDLER	1	10	3 SPEED					
	1001	32210-78200	ASSY-SHAFT COUNTER	1	1	3 SPEED					
	1101	32212-78200	SHAFT-COUNTER	1	1	3 SPEED					
	1201	32216-78000	GEAR-2ND SPEED COUNTER SHAFT	1	1	3 SPEED					
*	1301	32217-78000	GEAR-DRIVE COUNTER SHAFT	1	1	3 SPEED					
	02	32200-78050	GEAR-DRIVE COUNTER SHAFT	1	1	3 SPEED			C	N	32217-78000
	1401	00926-51600	KEY-WOODRUFF	4	10	3 SPEED					
	1501	00922-13200	RING-SNAP	3	50	3 SPEED					
	1601	00922-12800	RING-SNAP	1	50	3 SPEED					
	1701	32273-14360	BEARING-COUNTER SHAFT	1	1	3 SPEED					
	1801	32203-14360	BEARING-COUNTER SHAFT	1	1	3 SPEED					
	1901	32224-20100	RING-BEARING COUNTER SHAFT	1	10	3 SPEED					
	2001	32218-20100	SHIM-BEARING COUNTER (T=1.00MM) USE FIT ONE	1	10	3 SPEED					

NOTE:

© 1972 NISSAN MOTOR CO., LTD.

PRINTED IN JAPAN

TRANSMISSION GEARS, SPEEDOMETER PINION (3 SPEED) - R3W71A -

S	KEY NO.	PART NO.	DESCRIPTION	QTY	UNIT PKG FOR DIST.	APPLIED MODEL	APPLIED DATE FROM	APPLIED DATE UP TO	ICA N	ICA F	SUPERSEDED
	2002	32218-20101	SHIM-BEARING COUNTER (T=0.90MM) USE FIT ONE	1	10	3 SPEED					
	03	32218-20102	SHIM-BEARING COUNTER (T=0.80MM) USE FIT ONE	1	10	3 SPEED					
	04	32218-20103	SHIM-BEARING COUNTER (T=0.70MM) USE FIT ONE	1	10	3 SPEED					
	05	32218-20104	SHIM-BEARING COUNTER (T=0.60MM) USE FIT ONE	1	10	3 SPEED					
	06	32218-20105	SHIM-BEARING COUNTER (T=0.50MM) USE FIT ONE	1	10	3 SPEED					
	07	32218-20106	SHIM-BEARING COUNTER (T=0.40MM) USE FIT ONE	1	10	3 SPEED					
	2101	32200-78050	ASSY-GEAR MAIN DRIVE(23T)	1	1	3 SPEED			Y	Y	32200-78000
	2201	32272-36900	BEARING-PILOT MAIN SHAFT	1	1	3 SPEED					
	2301	32273-04100	BEARING-MAIN DRIVE	1	1	3 SPEED					
	2401	32205-78000	SPACER-BEARING MAIN DRIVE	1	10	3 SPEED					
	2501	32204-78000	RING-SNAP(1.80T)	1	5	3 SPEED					
	02	32204-78001	RING-SNAP(1.87T)	1	5	3 SPEED					
	03	32204-78002	RING-SNAP(1.94T)	1	5	3 SPEED					
	04	32204-78003	RING-SNAP(2.01T)	1	5	3 SPEED					
	05	32204-78004	RING-SNAP(2.08T)	1	5	3 SPEED					
	2601	32207-20100	RING-SNAP USE FIT ONE	1	10	3 SPEED					
	02	32207-20101	RING-SNAP USE FIT ONE	1	10	3 SPEED					
	03	32207-20102	RING-SNAP USE FIT ONE	1	10	3 SPEED					
	2701	32242-78000	ASSY-GEAR REVERSE MAIN SHAFT 36T	1	1	3 SPEED					

NOTE:

© 1972 NISSAN MOTOR CO., LTD.

REVISED: DECEMBER, 1972

PRINTED IN JAPAN

C

TRANSMISSION GEARS, SPEEDOMETER PINION (3 SPEED) – R3W71A –

S	KEY NO.	PART NO.	DESCRIPTION	Q'TY	UNIT PKG FOR DIST.	APPLIED MODEL	APPLIED DATE FROM	APPLIED DATE UP TO	ICA N	ICA F	SUPERSEDED
	2801	32264-14600	BEARING-NEEDLE ROLLER	1	1	3 SPEED					
	2901	32253-14600	BUSH-REVERSE GEAR MAIN SHAFT	1	2	3 SPEED					
	3001	32250-78000	ASSY-GEAR 1ST MAIN SHAFT (34T)	1	1	3 SPEED					
	3101	32264-14600	BEARING-NEEDLE	1	1	3 SPEED					
	3201	32260-78000	ASSY-GEAR 2ND(31T)	1	1	3 SPEED					
	3301	32264-14600	BEARING-NEEDLE	1	1	3 SPEED					
	3401	32241-78200	SHAFT-MAIN	1	1	3 SPEED					
	3501	32601-73200	HUB-SYNCHRONIZER	1	1	3 SPEED					
•	02	32601-A8610	HUB-SYNCHRONIZER	1	1	3 SPEED			Y	Y	32601-73200
	3601	32606-73200	SLEEVE-COUPLING	1	1	3 SPEED					
•	3701	32604-14810	RING-BAULK	1	1	3 SPEED					
•	02	32604-A4610	RING-BAULK	1		3 SPEED			Y	N	32604-14810
	03	32604-P0100	RING-BAULK	1	1	3 SPEED			Y	N	32604-A4610
•	3801	32609-73200	INSERT-SHIFTING	3	10	3 SPEED					
	02	32609-73201	INSERT-SHIFTING	3	10	3 SPEED			Y	N	32609-73200
	3901	32603-73200	SPRING-SPREAD	2	10	3 SPEED					
	4001	32605-78001	HUB-SYNCHRONIZER	1	1	3 SPEED					
	4101	32606-73200	SLEEVE-COUPLING	1	1	3 SPEED					
•	4201	32604-14810	RING BAULK	2	1	3 SPEED					
•	02	32604-A4610	RING BAULK	2		3 SPEED			Y	N	32604-14810
	03	32604-P0100	RING BAULK	2	1	3 SPEED			Y	N	32604-A4610
•	4301	32609-73200	INSERT-SHIFTING	3	10	3 SPEED					

NOTE:

© 1972 NISSAN MOTOR CO., LTD.

PRINTED IN JAPAN

TRANSMISSION GEARS, SPEEDOMETER PINION (3 SPEED) - R3W71A -

S	KEY NO.	PART NO.	DESCRIPTION	Q'TY	UNIT PKG FOR DIST.	APPLIED MODEL	APPLIED DATE FROM	APPLIED DATE UP TO	ICA N	ICA F	SUPERSEDED
	4302	32609-73201	INSERT-SHIFTING	3	10	3 SPEED			Y	N	32609-73200
	4401	32603-73200	SPRING-SPREAD	2	10	3 SPEED					
	4501	32246-78000	WASHER-THRUST MAIN SHAFT	1	5	3 SPEED					
	4601	32247-20100	BALL-THRUST MAIN SHAFT	1	50	3 SPEED					
	4701	32357-78200	SPACER	1	5	3 SPEED					
	4801	32263-14601	RING-SNAP(T=1,50) USE FIT ONE	1	5	3 SPEED					
	02	32263-14602	RING-SNAP(T=1,55) USE FIT ONE	1	10	3 SPEED					
	03	32263-14603	RING-SNAP(T=1,60) USE FIT ONE	1	10	3 SPEED					
	04	32311-78000	RING-SNAP(T=2,4) USE FIT ONE	1	10	3 SPEED					
	05	32311-78001	RING-SNAP(T=2,5) USE FIT ONE	1	10	3 SPEED					
	06	32311-78002	RING-SNAP(T=2,6) USE FIT ONE	1	10	3 SPEED					
	07	32311-78003	RING-SNAP(T=2,7) USE FIT ONE	1	10	3 SPEED					
	08	32311-78004	RING-SNAP(T=2,8) USE FIT ONE	1	10	3 SPEED					
	09	32311-78005	RING-SNAP(T=2,9) USE FIT ONE	1	10	3 SPEED					
	4901	32703-78101	ASSY-PINION SPEEDOMETER(17T)	1	1	L23 DIESEL J20(LD) STD(LD)		0969			
	02	32703-78102	ASSY-PINION SPEEDOMETER(18T)	1	1	J20(RD) STD(RD)		0969			
	03	32703-78103	ASSY-PINION SPEEDOMETER(19T)	1	1	SUPER P-DX CUSTOM	1069				
	5001	32707-78000	ASSY-SLEEVE SPEEDOMETER	1	1	3 SPEED					
	5101	32709-14600	SEAL-OIL	1	10	3 SPEED					
	5201	32710-14600	RING-'O'	1	10	3 SPEED					
	5301	32712-61000	PIN-RETAINING	1	10	3 SPEED					

NOTE:

© 1972 NISSAN MOTOR CO., LTD.

PRINTED IN JAPAN

TRANSMISSION GEARS, SPEEDOMETER PINION (3 SPEED) - R3W71A -

S	KEY NO.	PART NO.	DESCRIPTION	Q'TY	UNIT PKG FOR DIST.	APPLIED MODEL	APPLIED DATE FROM	APPLIED DATE UP TO	ICA N	ICA F	SUPERSEDED
	5401	32718-14600	PLATE-LOCK	1	10	3 SPEED					
	5501	08110-61210	BOLT-PLATE	1	50	3 SPEED					
	5601	08915-13610	WASHER-LOCK	1	50	3 SPEED					
	5701	32701-20100	GEAR-DRIVE(5T)	1	1	3 SPEED		0969			
	02	32701-66005	GEAR-DRIVE(6T)	1	1	3 SPEED	1069				
	5801	32720-36900	BALL-STEEL	1	20	3 SPEED					
	5901	32228-20101	RING-SNAP	1	10	3 SPEED					

NOTE:

-

© 1972 NISSAN MOTOR CO., LTD.

PRINTED IN JAPAN

NOTE

NOTE

Printed in Japan

NISSAN MOTOR CO., LTD.

TRANSMISSION GEAR SHIFTING (3 SPEED) -R3W71A-

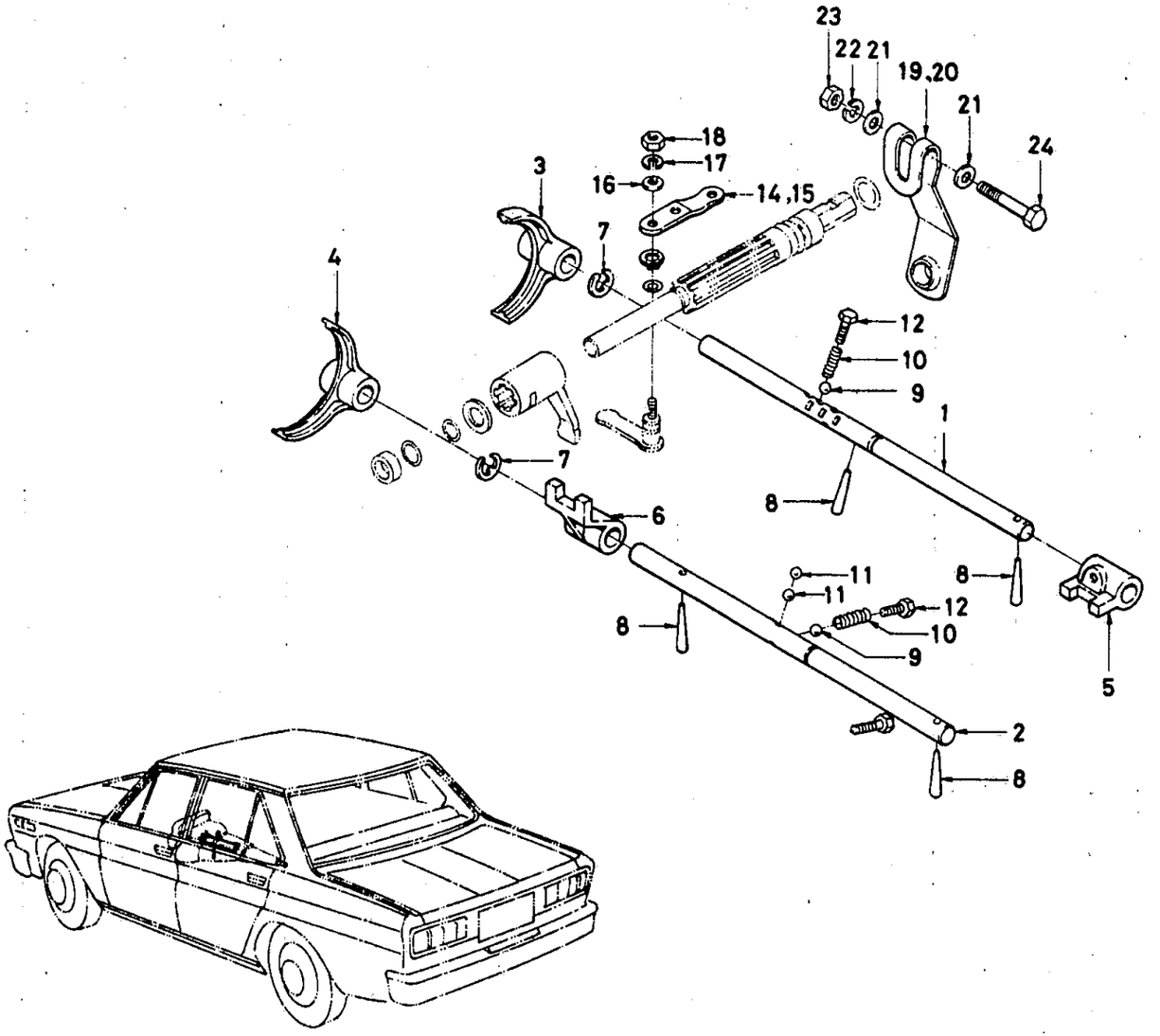

© 1972 NISSAN MOTOR CO., LTD.

REVISED: DECEMBER, 1972

PRINTED IN JAPAN

C

TRANSMISSION GEAR SHIFTING (3 SPEED)-R3W71A-

S	KEY NO.	PART NO.	DESCRIPTION	QTY	UNIT PKG FOR DIST.	APPLIED MODEL	APPLIED DATE FROM	APPLIED DATE UP TO	ICA N	ICA F	SUPERSEDED
	101	32801-78000	ROD-FORK REVERSE & 1ST	1	2	3 SPEED					
	201	32809-78000	ROD-FORK 2ND & 3RD SPEED	1	1	3 SPEED					
	301	32803-78001	FORK-1ST & REVERSE	1	50	3 SPEED					
	401	32811-78000	FORK-2ND & 3RD	1	1	3 SPEED					
	501	32833-78001	BRACKET-1ST & REVERSE SPEED	1	5	3 SPEED					
•	601	32813-78001	BRACKET-2ND & 3RD SPEED	1	2	3 SPEED					
	02	32813-78002	BRACKET-2ND & 3RD SPEED	1	1	3 SPEED		0969	Y	N	32813-78001
	701	32803-78001	RING-SNAP 'E' TYPE	1	50	3 SPEED					
	801	32292-36900	PIN-SPRING	2	10	3 SPEED					
	901	32829-26760	BALL-CHECK	1	50	3 SPEED					
	1001	32830-20100	SPRING-POPPET FORK ROD	1	10	3 SPEED					
	1101	32720-36900	BALL INTER LOCK	2	20	3 SPEED					
	1201	32834-78000	PLUG-CHECKING BALL	2	10	3 SPEED					
	1301	32835-78000	SPRING-CROSS SHAFT	1	10	3 SPEED					
	1401	32922-78000	LEVER-SELECTOR OUTER	1	1	3 SPEED R DRIVE					
	1501	32922-78300	LEVER-SELECTOR OUTER	1	1	3 SPEED L DRIVE					
	1601	08915-43810	WASHER-PLAIN	1	50	3 SPEED					
	1701	08915-13810	WASHER-LOCK	1	50	3 SPEED					
	1801	08911-30810	NUT-OUTER LEVER TO SHAFT	1	50	3 SPEED					
	1901	32923-78000	LEVER-SHIFT OUTER	1	1	3 SPEED R DRIVE					
	2001	32923-78300	LEVER-SHIFT OUTER	1	1	3 SPEED L DRIVE					
	2101	08915-43810	WASHER-PLAIN	2	50	3 SPEED					
	2201	08915-13810	WASHER-LOCK	1	50	3 SPEED					

NOTE:

© 1972 NISSAN MOTOR CO., LTD.

PRINTED IN JAPAN

TRANSMISSION GEAR SHIFTING (3 SPEED)-R3W71A-

S	KEY NO.	PART NO.	DESCRIPTION	Q'TY	UNIT PKG FOR DIST.	APPLIED MODEL	APPLIED DATE FROM	APPLIED DATE UP TO	ICA N	ICA F	SUPERSEDED
	2301	08911-10810	NUT-OPERTING LEVER TO SHAFT	1	50	3 SPEED					
	2401	32952-78000	BOLT-PIN CHANGE LEVER	1	10	3 SPEED					

NOTE:

© 1972 NISSAN MOTOR CO., LTD.

REVISED: DECEMBER, 1972

PRINTED IN JAPAN

NOTE

Printed in Japan

NISSAN MOTOR CO., LTD.

TRANSMISSION CASE, REAR EXTENSION & BLEATHER (4 SPEED) - R4W71A -

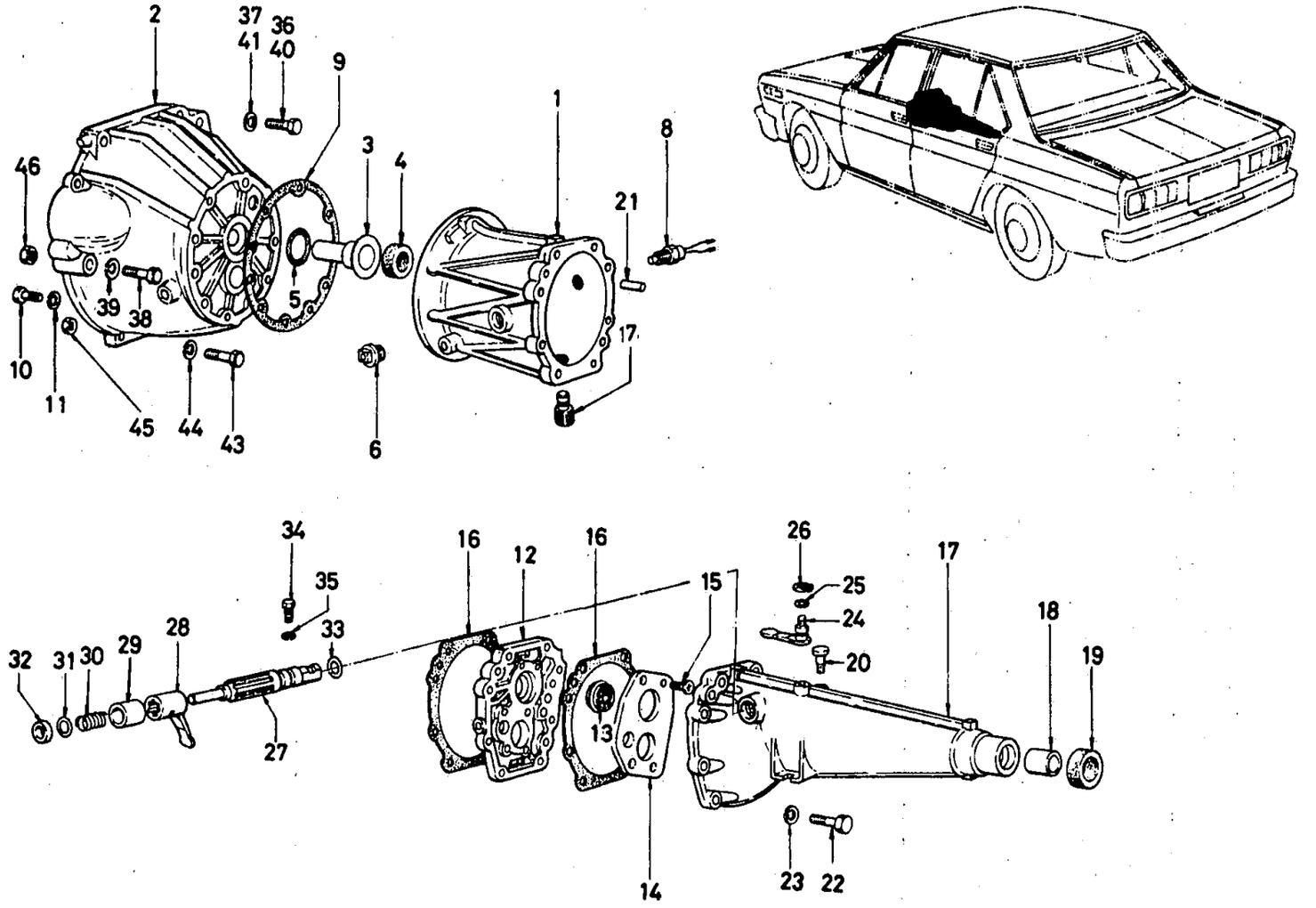

© 1972 NISSAN MOTOR CO., LTD.

REVISED: DECEMBER, 1972

PRINTED IN JAPAN

C

TRANSMISSION CASE, REAR EXTENSION & BLEATHER (4 SPEED) - R4W71A -

S	KEY NO.	PART NO.	DESCRIPTION	Q'TY	UNIT PKG FOR DIST.	APPLIED MODEL	APPLIED DATE FROM	APPLIED DATE UP TO	ICA N	ICA F	SUPERSEDED
*	101	32101-78002	CASE-TRANSMISSION	1	1	VAN G-UX R DRIVE		0969			
	02	32101-P0500	CASE-TRANSMISSION	1	1	VAN G-UX R DRIVE		0969	Y	N	32101-78002
*	03	32101-78002	CASE-TRANSMISSION	1	1	4 SPEED(EXC STD) R DRIVE					
	04	32101-P0500	CASE-TRANSMISSION	1	1	4 SPEED(EXC STD) R DRIVE			Y	N	32101-78002
*	05	32101-78312	CASE-TRANSMISSION	1	1	VAN L DRIVE UP L23		0969			
	06	32101-P0701	CASE-TRANSMISSION	1	1	VAN L DRIVE UP L23			Y	N	32101-78312
*	07	32101-78312	CASE-TRANSMISSION	1	1	4 SPEED(EXC STD) L DRIVE					
	08	32101-P0701	CASE-TRANSMISSION	1	1	VAN L DRIVE UP L23			Y	N	32101-78312
*	09	32101-78211	CASE-TRANSMISSION	1	1	4 SPEED STD R DRIVE	1069				
*	10	32101-78012	CASE-TRANSMISSION	1	1	4 SPEED STD R DRIVE	1069		Y	Y	32101-78211
	11	32101-P0700	4 SPEED STD R DRIVE	1	1	4 SPEED STD R DRIVE			Y	N	32101-78012
*	12	32101-78411	CASE-TRANSMISSION	1	1	4 SPEED STD L DRIVE	1069				
*	201	30401-E3200	HOUSING-CLUTCH	1	1	4 SPEED(EXC STD) R DRIVE	1069				
	02	30401-P0100	HOUSING-CLUTCH	1	1	4 SPEED(EXC STD) R DRIVE			Y	N	30401-E3200
	03	30401-78100	HOUSING-CLUTCH	1	1	G-UX(R DRIVE)		0969			
*	04	30401-E3600	HOUSING-CLUTCH	1	1	4 SPEED(EXC STD) L DRIVE	1069				

NOTE:

© 1972 NISSAN MOTOR CO., LTD.

PRINTED IN JAPAN

TRANSMISSION CASE, REAR EXTENSION & BLEATHER (4 SPEED) - R4W71A -

S	KEY NO.	PART NO.	DESCRIPTION	Q'TY	UNIT PKG FOR DIST.	APPLIED MODEL	APPLIED DATE FROM	APPLIED DATE UP TO	ICA N	ICA F	SUPERSEDED
	205	30401-P1700	HOUSING-CLUTCH	1	50	4 SPEED(EXC STD) L DRIVE			Y	N	30401-E3600
	06	30401-77900	HOUSING-CLUTCH	1	1	OP L23 L DRIVE		0969			
	07	30401-78001	HOUSING-CLUTCH	1	1	VAN R DRIVE		0969			
	08	30401-78002	HOUSING-CLUTCH	1	1	R DRIVE			Y	Y	30401-78001
	09	30401-78301	HOUSING-CLUTCH	1	1	VAN L DRIVE		0969			
	10	30401-78202	HOUSING-CLUTCH	1	1	4 SPEED STD R DRIVE	1069				
	11	30401-78201	HOUSING-CLUTCH	1	1	4 SPEED STD L DRIVE	1069				
	301	32110-78000	ASSY-COVER FRONT TRANSMISSION CASE	1	1	4 SPEED					
	401	32114-20100	SEAL-OIL FRONT	1	10	4 SPEED					
	501	32115-20100	RING-'O' FRONT COVER	1	10	4 SPEED					
	601	00931-11210	PLUG-LEVER & FILLER	1	10	4 SPEED					
	701	32103-14600	ASSY-PLUG DRAIN	1	10	4 SPEED					
	801	32005-21000	COMP-SWITCH REVERSE LAMP	1	1	4 SPEED					
	901	32118-78000	GASKET-TRANSMISSION TO CLUTCH HOUSING	1	10	4 SPEED					
	1001	08120-83210	BOLT-TRASMISSION TO CLUTCH HOUSING	10	50	4 SPEED					
	1101	08915-23810	WASHER-LOCK	10	50	4 SPEED					
	1201	32138-78000	PLATE-ADAPTER	1	1	4 SPEED					
	1301	32273-04100	BEARING-MAIN SHAFT	1	1	4 SPEED					
	1401	32139-20100	RETAINER-MAIN SHAFT BEARING	1	1	4 SPEED					
•	1501	08320-82010	SCREW	1	50	4 SPEED					

NOTE:

© 1972 NISSAN MOTOR CO., LTD.

REVISED: DECEMBER, 1972
PRINTED IN JAPAN

TRANSMISSION CASE, REAR EXTENSION & BLEATHER (4 SPEED) - R4W71A -

S	KEY NO.	PART NO.	DESCRIPTION	Q'TY	UNIT PKG FOR DIST.	APPLIED MODEL	APPLIED DATE FROM	APPLIED DATE UP TO	ICA N	ICA F	SUPERSEDED
	1502	08320-82012	SCREW	1	50	4 SPEED	1069		Y	N	08320-82010
	1601	32134-78000	GASKET-REAR EXTENSION	2	10	4 SPEED					
	1701	32130-78200	ASSY-EXTENSION REAR	1	1	4 SPEED					
*	02	32131-78251	ASSY-EXTENSION REAR	1	1	4 SPEED		0969	Y	N	32130-78200
	1801	32132-78000	BUSH-REAR EXTENSION	1		4 SPEED					
*	1901	32136-07200	SEAL-OIL	1	10	4 SPEED					
	02	32136-E0100	SEAL-OIL	1	1	4 SPEED	1069		Y	N	32136-07200
	2001	38322-78000	BREATHER	1	5	4 SPEED					
	2101	32106-20100	DOWEL-TRANSMISSION ADAPTER	2	5	4 SPEED					
	2201	08915-23810	BOLT-EXTENSION TO T/M CASE	8	50	4 SPEED					
	2301	08120-85010	WASHER EXTENSION TO T/M CASE	8	25	4 SPEED					
	2401	32880-78000	ASSY-LEVER SELECTOR	1	1	4 SPEED					
	2501	32884-78000	RING-'O' SELECTOR SHAFT	1	20	4 SPEED					
	2601	00922-11400	RING-SNAP	1	50	4 SPEED					
	2701	32911-78000	SHAFT-CROSS CHANGE SPEED	1	1	4 SPEED					
	2801	32888-78002	LEVER-CHANGE SPEED CROSS	1	1	4 SPEED					
	2901	32886-78000	STOPPER-SELECTOR	1	5	4 SPEED					
	3001	32885-78000	SPRING-CROSS SHAFT CHANGE	1	5	4 SPEED					
	3101	32858-14600	RING-'O'	1	10	4 SPEED					
	3201	32857-14600	CAP-'O' RING	1	10	4 SPEED					
	3301	32868-78000	RING-'O' CROSS SHAFT	1	20	4 SPEED					
	3401	32887-78000	SCREW-SET CROSS SHAFT	1		4 SPEED					
	3501	08915-13810	WASHER-LOCK	1	50	4 SPEED					

NOTE:

REVISED: DECEMBER, 1972

© 1972 NISSAN MOTOR CO., LTD.

PRINTED IN JAPAN

TRANSMISSION CASE, REAR EXTENSION & BLEATHER (4 SPEED) - R4W71A -

S	KEY NO.	PART NO.	DESCRIPTION	Q'TY	UNIT PKG FOR DIST.	APPLIED MODEL	APPLIED DATE FROM	APPLIED DATE UP TO	ICA N	ICA F	SUPERSEDED
	3601	00131-66010	BOLT-FIXING T/M TO L23 ENGINE	4	25	L23		0969			
	3701	08915-24010	WASHER-LOCK FIXING T/M TO L23 ENGINE	4	50	L23		0969			
	3801	08110-61210	BOLT-FIXING T/M TO L23 ENGINE	4	50	L23		0969			
	3901	08915-13610	WASHER-LOCK FIXING T/M TO L23 ENGINE	4	50	L23		0969			
	4001	00134-66510	BOLT-FIXING T/M TO J20 ENGINE	4	25	J23		0969			
	4101	08915-24010	WASHER-LOCK FIXING T/M TO J20 ENGINE	4	50	J20		0969			
	4201	00911-24610	NUT-FIXING T/M TO J20 ENGINE	2	50	J20		0969			
	4301	08110-83510	BOLT FIXING T/M TO J20 ENGINE	2	25	J20		0969			
	4401	08915-13810	WASHER-LOCK FIXING T/M TO J20 ENGINE	2	50	J20		0969			
	4501	08911-10810	NUT-FIXING T/M TO J20 ENGINE	2	50	J20		0969			

NOTE:

© 1972 NISSAN MOTOR CO., LTD.

PRINTED IN JAPAN

NOTE

Printed in Japan

NISSAN MOTOR CO., LTD.

TRANSMISSION GEARS & SPEEDOMETER PINION (4 SPEED) - R4W71A -

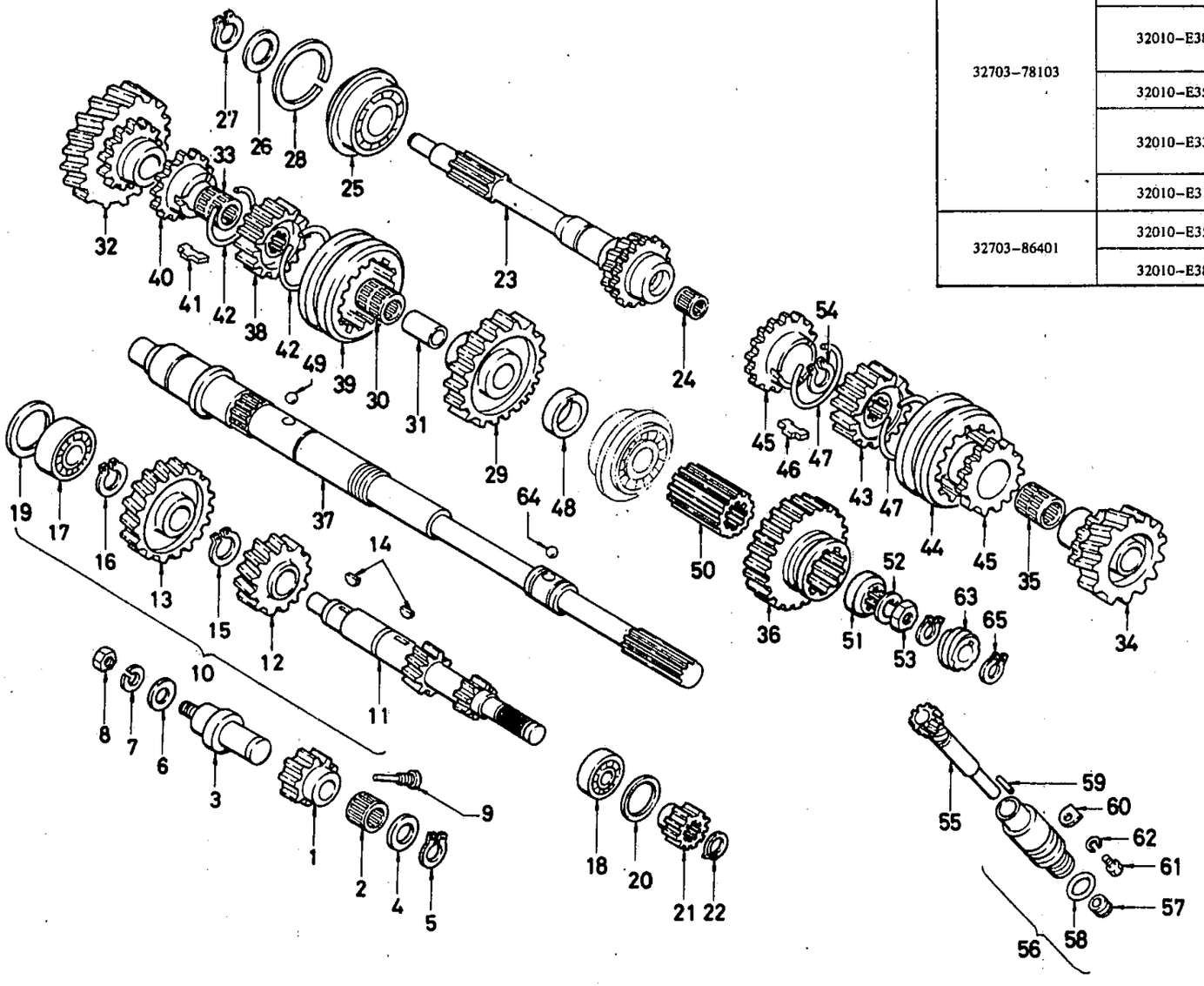

FOR 4 SPEED PINION

ASSY-SPEEDOMETER PINION PART NO.	APPLIED T/M PART NO. (4 SPEED T/M)	APPLIED MODEL
32703-78103	32010-E3456	STD DIESEL R DRIVE
	32010-E3755	STD DIESEL L DRIVE
	32010-E3857	CUSTOM P-DX2000 WAGON (HIGH SPEED AREA) & WAGON (L DRIVE)
	32010-E3556	WAGON R DRIVE
	32010-E3356	SUPER R DRIVE (HIGH SPEED AREA)
	32010-E3155	G-UX
32703-86401	32010-E3555	VAN-DX R DRIVE
	32010-E3855	VAN-DX L DRIVE

ILLUSTRATION **169**

© 1972 NISSAN MOTOR CO., LTD.

REVISED: DECEMBER, 1972

PRINTED IN JAPAN

TRANSMISSION GEARS, SPEEDOMETER PINION (4 SPEED) – R4W71A –

S	KEY NO.	PART NO.	DESCRIPTION	Q'TY	UNIT PKG FOR DIST.	APPLIED MODEL	APPLIED DATE FROM	APPLIED DATE UP TO	ICA N	ICA F	SUPERSEDED
	101	32282-78010	GEAR-REVERSE IDLER 17T	1	1	4 SPEED					
	201	32272-36900	BEARING-NEEDLE	1	1	4 SPEED					
	301	32281-78010	SHAFT-REVERSE IDLER	1	1	4 SPEED					
	401	32284-78000	WASHER-THRUST REVERSE	2	5	4 SPEED					
	501	32285-20100	RING-SNAP REVERSE IDLER	1	5	4 SPEED					
	601	32294-78010	WASHER-PLAIN	1	10	4 SPEED					
	701	08915-14410	WASHER-LOCK	1	50	4 SPEED					
●	801	08911-34410	NUT	1	50	4 SPEED					
	02	01211-00011	NUT	1		4 SPEED			Y	N	08911-34410
	901	32290-78000	SCREW-SET REVERSE IDLER	1	10	4 SPEED					
	1001	32210-78010	ASSY-SHAFT COUNTER	1	1	4 SPEED					
	1101	32212-78010	SHAFT-COUNTER 18T 13T	1	1	4 SPEED					
	1201	32216-78010	GEAR-2ND SPEED COUNTER SHAFT 26T	1	1	4 SPEED					
	1301	32200-78055	GEAR-DRIVE COUNTER SHAFT 29T	1	1	4 SPEED					
	1401	00926-51600	KEY-WOODRUFF	4	10	4 SPEED					
	1501	00922-13200	RING-SNAP	1	50	4 SPEED					
	1601	00922-12800	RING-SNAP	1	50	4 SPEED					
	1701	32273-14360	BEARING-COUNTER SHAFT	1	1	4 SPEED					
	1801	32203-14360	BEARING-COUNTER SHAFT USE FIT ONE	1	1	4 SPEED					
●	02	32203-78000	BEARING-COUNTER SHAFT USE FIT ONE	1	1	4 SPEED					
	03	32203-E0100	BEARING-COUNTER SHAFT USE FIT ONE	1	1	4 SPEED		0969	Y	N	32203-78000

NOTE:

© 1972 NISSAN MOTOR CO., LTD.

PRINTED IN JAPAN

TRANSMISSION GEARS, SPEEDOMETER PINION (4 SPEED) – R4W71A –

S	KEY NO.	PART NO.	DESCRIPTION	Q'TY	UNIT PKG FOR DIST.	APPLIED MODEL	APPLIED DATE FROM	APPLIED DATE UP TO	ICA N	ICA F	SUPERSEDED
	1901	32224-20100	RING-BEARING COUNTER SHAFT	1	10	4 SPEED					
	2001	32218-20100	SHIM-BEARING COUNTER T=1.00 USE FIT ONE	1	10	4 SPEED					
	02	32218-20101	SHIM-BEARING COUNTER T=0.90 USE FIX ONE	1	10	4 SPEED					
	03	32218-20102	SHIM-BEARING COUNTER T=0.80 USE FIT ONE	1	10	4 SPEED					
	04	32218-20103	SHIM-BEARING COUNTER T=0.70 USE FIT ONE	1	10	4 SPEED					
	05	32218-20104	SHIM-BEARING COUNTER T=0.60 USE FIT ONE	1	10	4 SPEED					
	06	32218-20105	SHIM-BEARING COUNTER T=0.50 USE FIT ONE	1	10	4 SPEED					
	07	32218-20106	SHIM-BEARING COUNTER T=0.40 USE FIT ONE	1	10	4 SPEED					
	2101	32220-78010	GEAR-REVERSE COUNTER 15T	1		4 SPEED					
	2201	32228-20100	RING-SNAP REVERSE COUNTER T=1.1 USE FIT ONE	1	10	4 SPEED					
	02	32228-20101	RING-SNAP REVERSE COUNTER T=1.2 USE FIT ONE	1	10	4 SPEED					
	03	32228-20102	RING-SNAP REVERSE COUNTER T=1.3 USE FIT ONE	1	10	4 SPEED					
	04	32228-20103	RING-SNAP REVERSE COUNTER T=1.4 USE FIT ONE	1	10	4 SPEED					
	05	32228-20104	RING-SNAP REVERSE COUNTER T=1.5 USE FIT ONE	1	10	4 SPEED			Y	N	32228-20103
	2301	32200-78055	ASSY-GEAR MAIN DRIVE 22T	1	1	4 SPEED					
	2401	32272-36900	BEARING-PILOT MAIN SHAFT	1	1	4 SPEED					
	2501	32273-04100	BEARING-MAIN DRIVE	1	1	4 SPEED					

NOTE:

ILLUSTRATION **169**

© 1972 NISSAN MOTOR CO., LTD.

REVISED: DECEMBER, 1972

PRINTED IN JAPAN

TRANSMISSION GEARS, SPEEDOMETER PINION (4 SPEED) – R4W71A –

S	KEY NO.	PART NO.	DESCRIPTION	Q'TY	UNIT PKG FOR DIST.	APPLIED MODEL	APPLIED DATE FROM	APPLIED DATE UP TO	ICA N	ICA F	SUPERSEDED
	2601	32205-78000	SPACER-BEARING MAIN DRIVE GEAR	1	10	4 SPEED					
	2701	32204-78000	RING-SNAP T=1,60 USE FIT ONE	1	5	4 SPEED					
	02	32204-78001	RING-SNAP T=1,67 USE FIT ONE	1	5	4 SPEED					
	03	32204-78002	RING-SNAP T=1,74 USE FIT ONE	1	5	4 SPEED					
	04	32204-78003	RING-SNAP T=2,01 USE FIT ONE	1	5	4 SPEED					
	05	32204-78004	RING-SNAP T=2,08 USE FIT ONE	1	5	4 SPEED					
	2801	32207-20100	RING-SNAP T=1,2 USE FIT ONE	1	10	4 SPEED					
	02	32207-20101	RING-SNAP T=1,4 USE FIT ONE	1	10	4 SPEED					
	03	32207-20102	RING-SNAP T=1,6 USE FIT ONE	1	10	4 SPEED					
	2901	32242-78010	ASSY-GEAR REVERSE MAIN SHAFT 35T	1		4 SPEED					
	3001	32264-14600	BEARING-NEEDLE ROLLER	1	1	4 SPEED					
	3101	32253-14600	BUSH-REVERSE GEAR MAIN SHAFT	1	2	4 SPEED					
	3201	32250-78010	ASSY-GEAR 1ST MAIN SHAFT 30T	1	1	4 SPEED					
	3301	32264-14600	BEARING-NEEDLE	1	1	4 SPEED					
	3401	32260-78010	ASSY-GEAR 2ND MAIN SHAFT 28T	1	1	4 SPEED					
	3501	32264-14600	BEARING-NEEDLE	1	1	4 SPEED					
	3601	32245-78010	GEAR-REVERSE MAIN SHAFT 36T	1		4 SPEED					
	3701	32241-78011	SHAFT-MAIN	1	1	4 SPEED					
	3801	32601-73200	HUB-SYNCHRONIZER	1	1	4 SPEED					
●	02	32601-A8610	HUB-SYNCHRONIZER	1	1	4 SPEED			Y	Y	32601-73200
	3901	32606-73200	SLEEVE-COUPLING	1	1	4 SPEED					
●	4001	32604-14810	RING-BAULK	2	1	4 SPEED					

NOTE:

REVISED: DECEMBER, 1972

© 1972 NISSAN MOTOR CO., LTD.

PRINTED IN JAPAN

TRANSMISSION GEARS, SPEEDOMETER PINION (4 SPEED) - R4W71A -

S	KEY NO.	PART NO.	DESCRIPTION	Q'TY	UNIT PKG FOR DIST.	APPLIED MODEL	APPLIED DATE FROM	APPLIED DATE UP TO	ICA N	ICA F	SUPERSEDED
•	4002	32604-A4610	RING-BAULK	2		4 SPEED			Y	N	32604-14810
	03	32604-P0100	RING-BAULK	2	1	4 SPEED			Y	N	32604-A4610
•	4101	32609-73200	INSERT-SHIFTING	3	10	4 SPEED					
	02	32609-73201	INSERT-SHIFTING	3	10	4 SPEED			Y	N	32609-73200
	4201	32603-73200	SPRING-SPREAD	2	10	4 SPEED					
	4301	32605-78001	HUB-SYNCHRONIZER	1	1	4 SPEED					
	4401	32606-73200	SLEEVE-COUPLING	1	1	4 SPEED					
•	4501	32604-14810	RING-BAULK	2	1	4 SPEED					
•	02	32604-A4610	RING-BAULK	2		4 SPEED			Y	N	32604-14810
	03	32604-P0100	RING-BAULK	2	1	4 SPEED			Y	N	32604-A4610
•	4601	32609-73200	INSERT-SHIFTING	3	10	4 SPEED					
	02	32609-73201	INSERT-SHIFTING	3	10	4 SPEED			Y	N	32609-73200
	4701	32603-73200	SPRING-SPREAD	2	10	4 SPEED					
	4801	32246-78000	WASHER-THRUST MAIN SHAFT	1	5	4 SPEED					
	4901	32247-20100	BALL-THRUST MAIN SHAFT	1	50	4 SPEED					
	5001	32258-78011	HUB-REVERSE MAIN SHAFT	1	1	4 SPEED					
	5101	32352-78002	WASHER-THRUST	1	2	4 SPEED					
	5201	32353-78001	PLATE-LOCK	1	10	4 SPEED					
	5301	32354-25500	NUT	1	10	4 SPEED					
	02	32354-25501	NUT	1	10	4 SPEED			Y	Y	32354-25500
	5401	32263-14601	RING-SNAP T=1.50 USE FIT ONE	1	5	4 SPEED					
	02	32263-14602	RING-SNAP T=1.55 USE FIT ONE	1	10	4 SPEED					
	03	32263-14603	RING-SNAP T=1.60 USE FIT ONE	1	10	4 SPEED					

NOTE:

ILLUSTRATION **169**

© 1972 NISSAN MOTOR CO., LTD.

REVISED: DECEMBER, 1972

PRINTED IN JAPAN

TRANSMISSION GEARS, SPEEDOMETER PINION (4 SPEED) – R4W71A –

S	KEY NO.	PART NO.	DESCRIPTION	Q'TY	UNIT PKG FOR DIST.	APPLIED MODEL	APPLIED DATE FROM	APPLIED DATE UP TO	ICA N	ICA F	SUPERSEDED
	5501	32703-78101	ASSY-PINION SPEEDOMETER 17T	1	1	G-DX VAN OP L23		0969			
	02	32703-86401	ASSY-PINION SPEEDOMETER 21T	1	1	VAN-DX	1069				
	03	32703-78102	ASSY-PINION SPEEDOMETER 18T	1	1	L23 CUSTOM WAGON HIGH SPEED AREA	1069				
	04	32703-78103	ASSY-PINION SPEEDOMETER 19T	1	1	G-DX STD DIESEL	1069				
	5601	32707-78000	ASSY-SLEEVE SPEEDOMETER PINION	1	1	4 SPEED					
	5701	32709-14600	SEAL-OIL	1	10	4 SPEED					
	5801	32710-14600	RING-'O'	1	10	4 SPEED					
	5901	32712-61000	PIN-RETAINING	1	10	4 SPEED					
	6001	32718-14600	PLATE-LOCK	1	10	4 SPEED					
	6101	08110-61210	BOLT	1	50	4 SPEED					
	6201	08915-13610	WASHER-LOCK	1	50	4 SPEED					
	6301	32701-20100	GEAR-SPEEDOMETER DRIVE 5T	1	1	G-DX VAN OP L23		0969			
	02	32701-66005	GEAR-SPEEDOMETER DRIVE 6T	1	1	4 SPEED	1069				
	6401	32720-36900	BALL-STEEL	1	20	4 SPEED					
	6501	32228-20101	RING-SNAP	2	10	4 SPEED					

NOTE:

© 1972 NISSAN MOTOR CO., LTD.

PRINTED IN JAPAN

NOTE

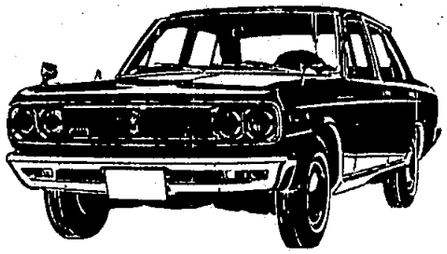

NOTE

Printed in Japan

NISSAN MOTOR CO., LTD.

TRANSMISSION GEAR SHIFTING (4 SPEED)-R4W71A-

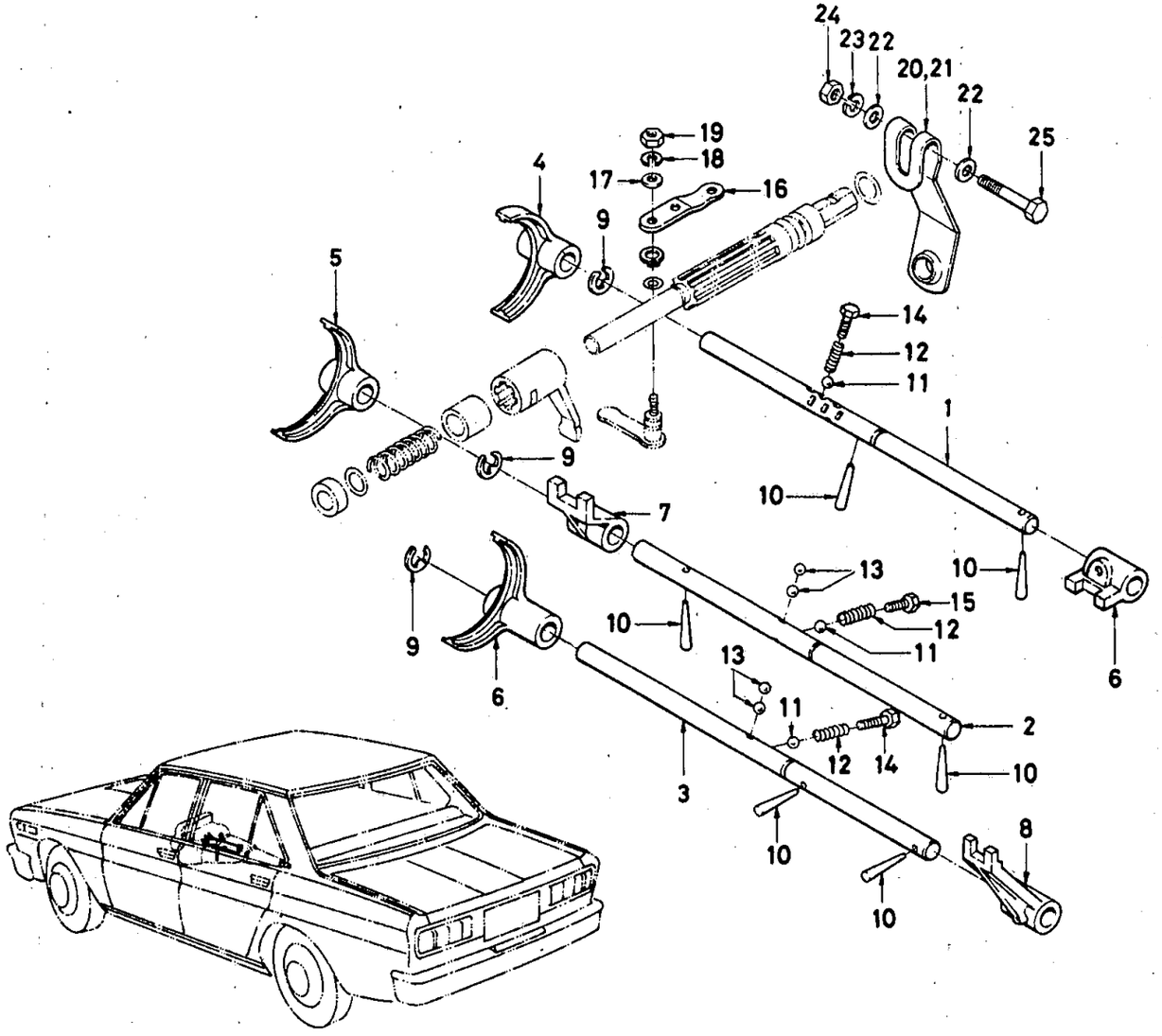

ILLUSTRATION **170**

© 1972 NISSAN MOTOR CO., LTD.

REVISED: DECEMBER, 1972

PRINTED IN JAPAN

TRANSMISSION GEAR SHIFTING (4 SPEED)-R4W71A-

S	KEY NO.	PART NO.	DESCRIPTION	QTY	UNIT PKG FOR DIST.	APPLIED MODEL	APPLIED DATE FROM	APPLIED DATE UP TO	ICA N	ICA F	SUPERSEDED
	101	32801-78010	ROD-FORK 1ST & 2ND SPEED	1	1	4 SPEED					
	201	32809-78000	ROD-FORK 3RD & 4TH SPEED	1	1	4 SPEED					
	301	32816-78010	ROD-FORK REVERSE SPEED	1	1	4 SPEED					
	401	32811-78000	FORK-SHIFTING 1ST 2ND 3RD & 4TH SPEED	2	1	4 SPEED					
	501	32819-78010	FORK-REVERSE SPEED	1	1	4 SPEED					
	601	32833-78001	BRACKET-1ST & 2ND SPEED	1	5	4 SPEED					
•	701	32813-78001	BRACKET-3RD & 4TH SPEED	1	2	4 SPEED		0969			
	02	32813-78002	BRACKET 2ND & 3RD SPEED	1	1	4 SPEED	1069		Y	Y	32813-78001
•	801	32382-78001	BRACKET-REVERSE SPEED	1	1	4 SPEED					
	02	32382-78002	BRACKET O/D SPEED	1	1	4 SPEED			Y	Y	32382-78001
	901	32803-78001	RING-SNAP E TYPE	3	50	4 SPEED					
	1001	32292-36900	PIN-SPRING	6	10	4 SPEED					
	1101	32829-26760	BALL-CHECK	3	50	4 SPEED					
	1201	32830-20100	SPRING-POPPET FORK ROD	3	10	4 SPEED					
	1301	32720-36900	BALL-INTER LOCK	4	20	4 SPEED					
	1401	32834-78000	PLUG-CHECKING BALL	2	10	4 SPEED					
	1501	32835-78000	PLUG-CHECKING BALL	1	10	4 SPEED					
	1601	32922-78000	LEVER-SELECTOR OUTER	1	1	4 SPEED(R DRIVE)					
	02	32922-78300	LEVER-SELECTOR OUTER	1	1	4 SPEED(L DRIVE)					
	1701	08915-43810	WASHER-PLAIN	1	50	4 SPEED					
	1801	08915-13810	WASHER-LOCK	1	50	4 SPEED					
	1901	08911-30810	NUT	1	50	4 SPEED					

NOTE:

PRINTED IN JAPAN

© 1972 NISSAN MOTOR CO., LTD.

TRANSMISSION GEAR SHIFTING (4 SPEED)-R4W71A-

S	KEY NO.	PART NO.	DESCRIPTION	QTY	UNIT PKG FOR DIST.	APPLIED MODEL	APPLIED DATE FROM	APPLIED DATE UP TO	ICA N	ICA F	SUPERSEDED
	2001	32923-78000	LEVER-SHIFT OUTER	1	1	4 SPEED					
	2101	32923-78300	LEVER-SHIFT OUTER	1	1	4 SPEED					
	2201	08915-43810	WASHER-PLAIN	2	50	4 SPEED					
	2301	08915-13810	WASHER-LOCK	1	50	4 SPEED					
	2401	08911-10810	NUT	1	50	4 SPEED					
	2501	32952-78000	BOLT-PIN CHANGE LEVER	1	10	4 SPEED					

NOTE:

© 1972 NISSAN MOTOR CO., LTD.

REVISED: DECEMBER, 1972

PRINTED IN JAPAN

NOTE

Printed in Japan

NISSAN MOTOR CO., LTD.

TRANSMISSION ASSEMBLY (AUTOMATIC) -3N71A- ('69 YEAR MODEL)

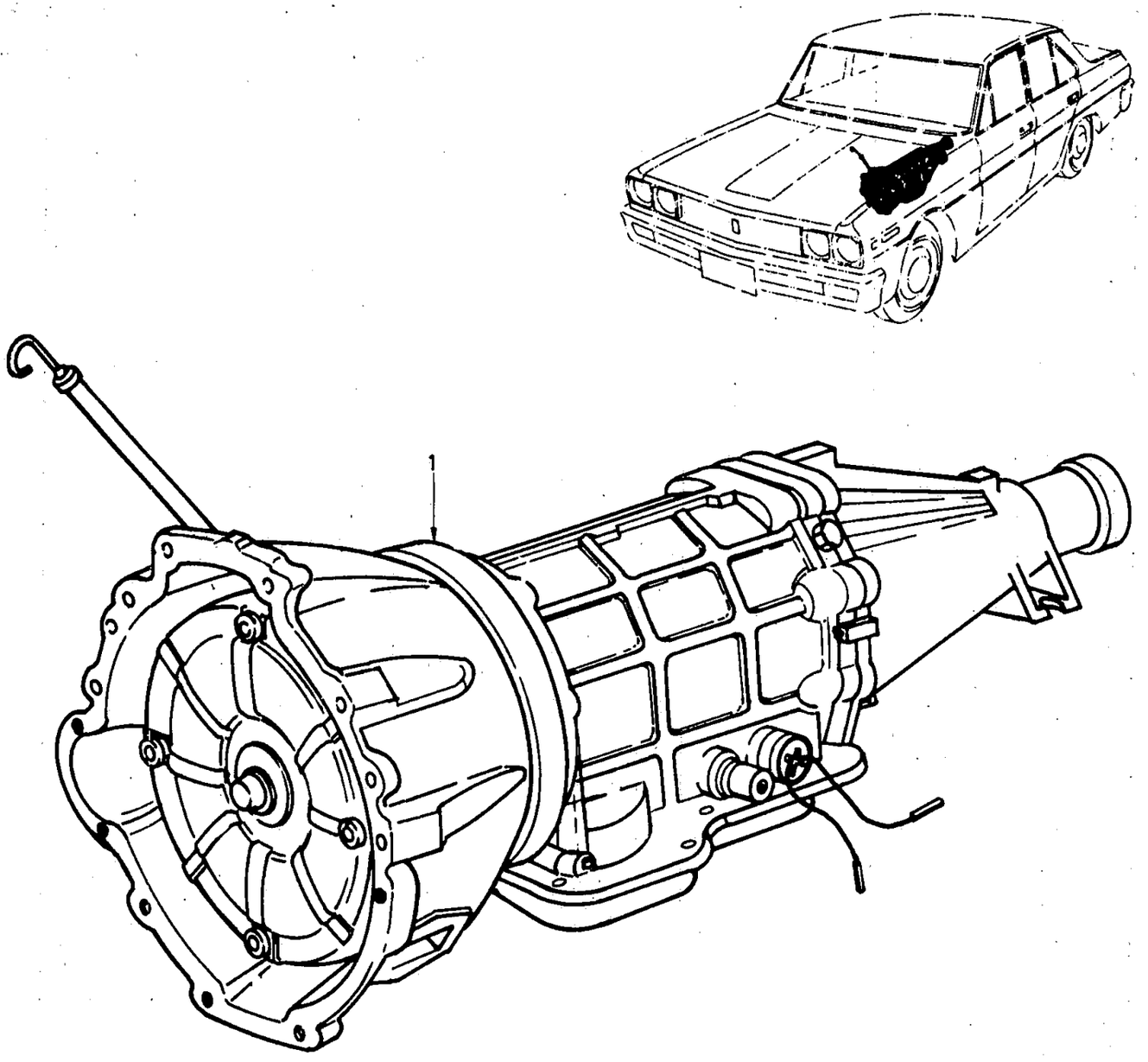

ILLUSTRATION **171**

© 1972 NISSAN MOTOR CO., LTD.

REVISED: DECEMBER, 1972

PRINTED IN JAPAN

TRANSMISSION ASSEMBLY (AUTOMATIC)-3N71A- ('69 YEAR MODEL)

S	KEY NO.	PART NO.	DESCRIPTION	Q'TY	UNIT PKG FOR DIST.	APPLIED MODEL	APPLIED DATE FROM	APPLIED DATE UP TO	ICA N	ICA F	SUPERSEDED
	101	31000-E0250	ASSY-TRANSMISSION AUTOMATIC (3N71A)	1	1	AUTOMATIC J20 R DRIVE		0969			
	02	31000-E1250	ASSY-TRANSMISSION AUTOMATIC (3N71A)	1	1	AUTOMATIC J20 L DRIVE		0969			
	03	31000-E1750	ASSY-TRANSMISSION AUTOMATIC	1	1	AUTOMATIC L23 R DRIVE		0969			
*	04	31000-E1850	ASSY-TRANSMISSION AUTOMATIC (3N71A)	1		AUTOMATIC L23 L DRIVE		0969			

NOTE:

© 1972 NISSAN MOTOR CO., LTD.

PRINTED IN JAPAN

NOTE

NOTE

Printed in Japan

NISSAN MOTOR CO., LTD.

TRANSMISSION ASSEMBLY (AUTOMATIC)-3N71A- ('70 YEAR MODEL)

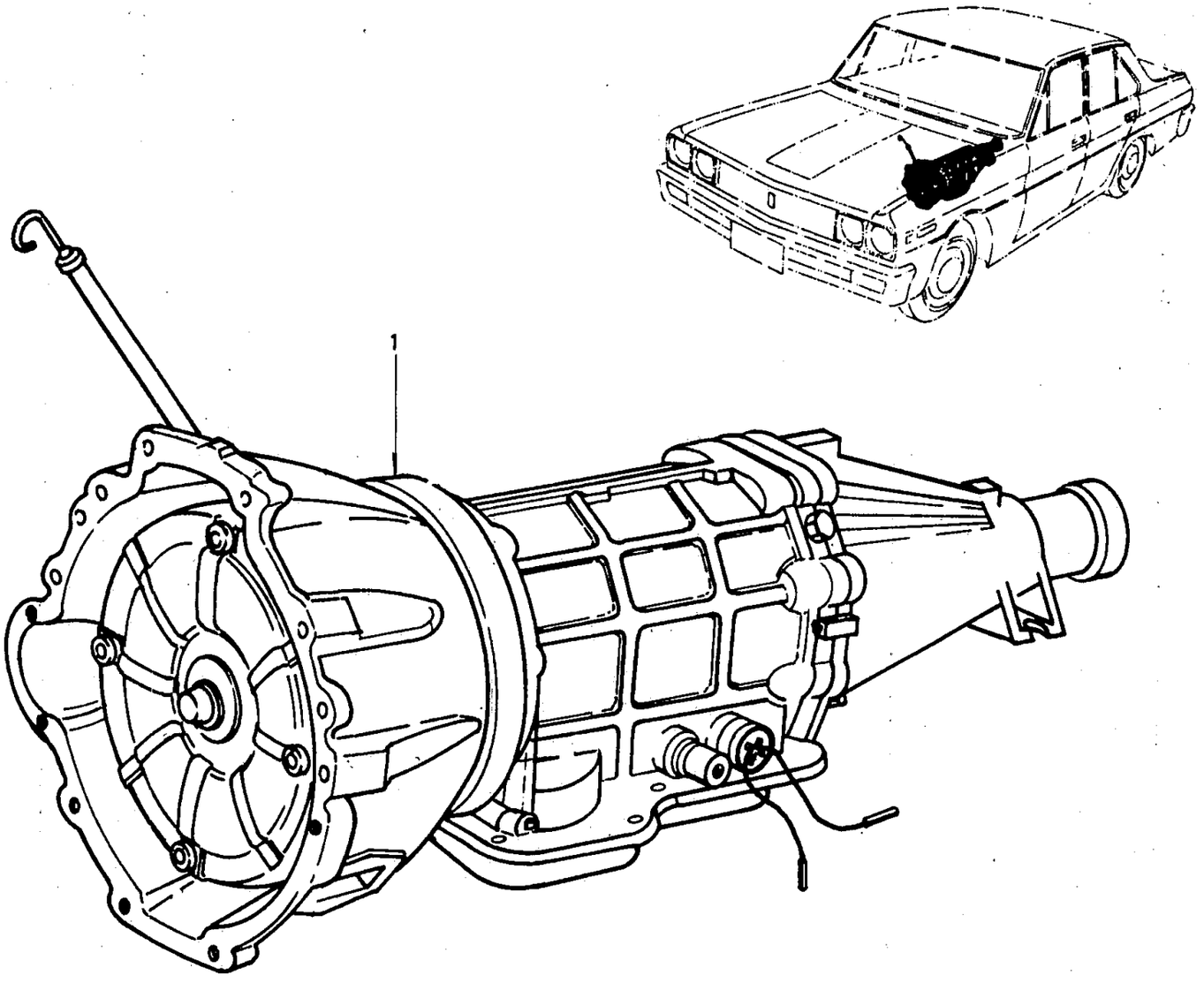

ILLUSTRATION **171A**

© 1972 NISSAN MOTOR CO., LTD.

REVISED: DECEMBER, 1972

PRINTED IN JAPAN

TRANSMISSION ASSEMBLY (AUTOMATIC)-3N71A- ('70 YEAR MODEL)

S	KEY NO.	PART NO.	DESCRIPTION	QTY	UNIT PKG FOR DIST.	APPLIED MODEL	APPLIED DATE FROM	APPLIED DATE UP TO	ICA N	ICA F	SUPERSEDED
	101	31000-E3150	ASSY-TRANSMISSION AUTOMATIC 3N71A S/G RATIO 2016	1	1	SUPER P-DX 2400 RD AUTOMATIC	1069				
	02	31000-E3155	ASSY-TRANSMISSION AUTOMATIC 3N71A S/G RATIO 2016	1	1	SUPER P-DX 2400 LD AUTOMATIC	1069				
	03	31000-E3550	ASSY-TRANSMISSION AUTOMATIC 3N71A S/G RATIO 2016	1	1	CUSTOM WAGON RD AUTOMATIC	1069				
	04	31000-E3055	ASSY-TRANSMISSION AUTOMATIC 3N71A S/G RATIO 2016	1	1	CUSTOM WAGON LD AUTOMATIC	1069				

NOTE:

© 1972 NISSAN MOTOR CO., LTD.

PRINTED IN JAPAN

NOTE

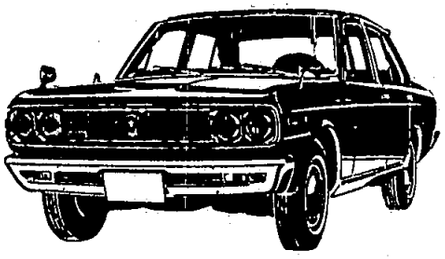

NOTE

Printed in Japan

NISSAN MOTOR CO., LTD.

TRANSMISSION CASE (AUTOMATIC) - 3N71A -

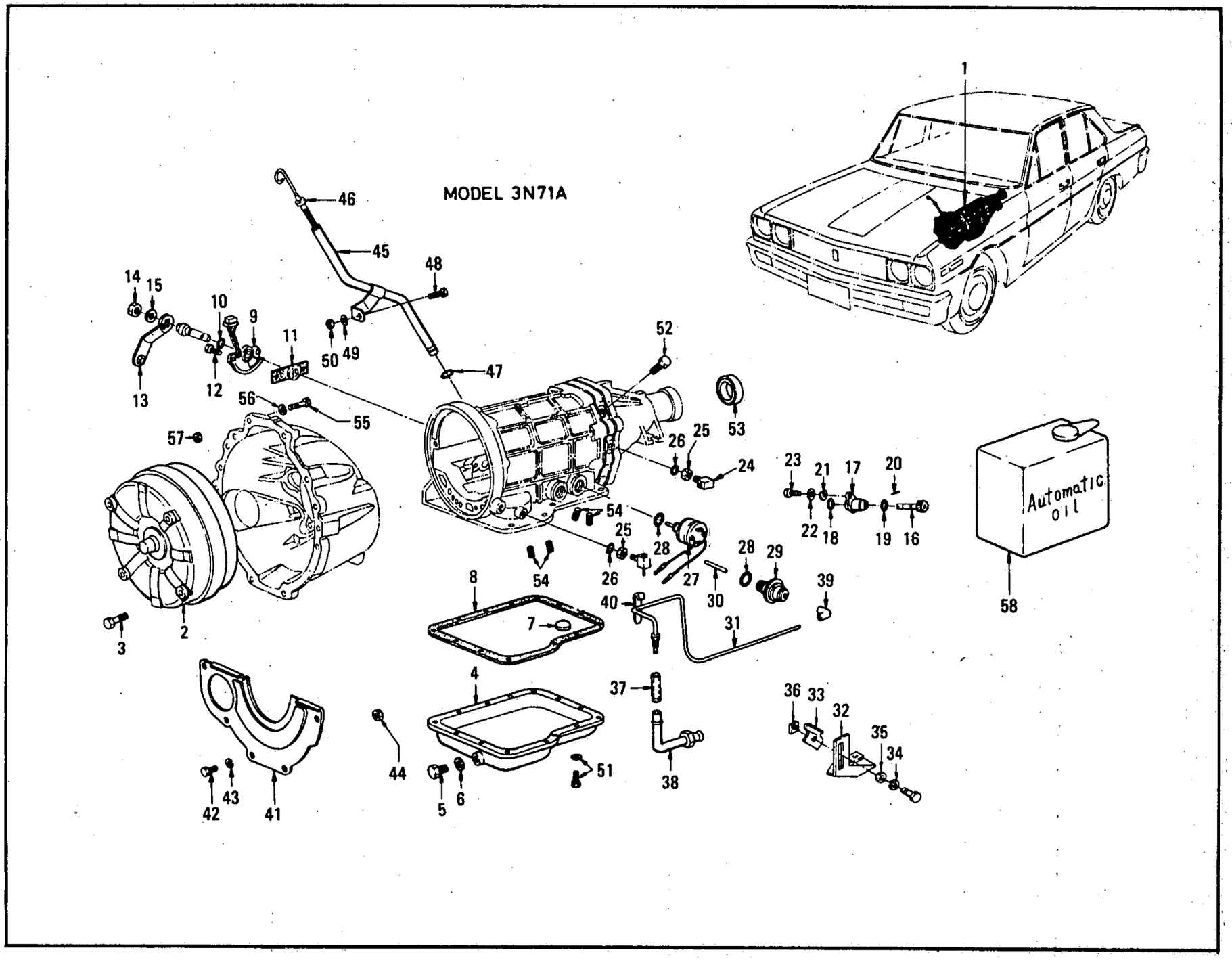

ILLUSTRATION **172**

© 1972 NISSAN MOTOR CO., LTD.

REVISED: DECEMBER, 1972

PRINTED IN JAPAN

TRANSMISSION CASE (AUTOMATIC) -3N71A-

S	KEY NO.	PART NO.	DESCRIPTION	Q'TY	UNIT PKG FOR DIST.	APPLIED MODEL	APPLIED DATE FROM	APPLIED DATE UP TO	ICA N	ICA F	SUPERSEDED
	101	31000-E0250	ASSY-TRANSMISSION AUTOMATIC (3N71A)	1	1	AUTOMATIC RD J20		0969			
	02	31000-E1250	ASSY-TRANSMISSION AUTOMATIC (3N71A)	1	1	AUTOMATIC LD J20		0969			
	03	31000-E1750	ASSY-TRANSMISSION AUTOMATIC (3N71A)	1	1	AUTOMATIC RD L23		0969			
●	04	31000-E1850	ASSY-TRANSMISSION AUTOMATIC (3N71A)	1		AUTOMATIC LD L23		0969			
	05	31000-E3550	ASSY-TRANSMISSION AUTOMATIC (3N71A)	1	1	AUTOMATIC RD L20A	1069				
	06	31000-E3055	ASSY-TRANSMISSION AUTOMATIC (3N71A)	1	1	AUTOMATIC LD L20A	1069				
	07	31000-E3150	ASSY-TRANSMISSION AUTOMATIC (3N71A)	1	1	AUTOMATIC RD L24	1069				
	08	31000-E3155	ASSY-TRANSMISSION AUTOMATIC (3N71A)	1	1	AUTOMATIC LD L24					
●	201	31100-E0100	ASSY-CONVERTER TORQUE	1	1	AUTOMATIC					
	02	31100-X0500	ASSY-CONVERTER TORQUE	1	1	AUTOMATIC			Y	N	31100-E0100
	301	31009-77500	BOLT-CONVERTER	4	10	AUTOMATIC					
●	401	31390-20301	COMP-OIL PAN	1	1	AUTOMATIC					
●	02	31390-X0900	COMP-OIL PAN	1	1	AUTOMATIC			Y	N	31390-20301
	03	31390-X0901	COMP-OIL PAN	1	1	AUTOMATIC		0969	Y	N	31390-X0900
	501	31394-20300	PLUG-DRAIN	1	5	AUTOMATIC					
	601	31395-20300	GASKET-DRAIN PLUG	1	10	AUTOMATIC					
	701	31396-20300	MAGNET-OIL PAN	1	5	AUTOMATIC					
●	801	31397-20301	GASKET-OIL PAN	1	10	AUTOMATIC					
	02	31397-H1000	GASKET-OIL PAN	1	10	AUTOMATIC		0969	Y	N	31397-20301

NOTE:

© 1972 NISSAN MOTOR CO., LTD.

PRINTED IN JAPAN

TRANSMISSION CASE (AUTOMATIC) -3N71A-

S	KEY NO.	PART NO.	DESCRIPTION	Q'TY	UNIT PKG FOR DIST.	APPLIED MODEL	APPLIED DATE FROM	APPLIED DATE UP TO	ICA N	ICA F	SUPERSEDED
	901	31918-H0100	ASSY-SWITCH INHIBITOR	1	1	AUTOMATIC					
*	1001	31916-H0101	SEAL-'O'RING	1	20	AUTOMATIC					
	02	31916-X0100	SEAL-'O' RING	1	10	AUTOMATIC	1069		Y	N	31916-H0101
*	1101	31919-H0100	GASKET-INHIBITOR SWITCH	1	10	AUTOMATIC					
	02	31919-X0101	GASKET-INHIBITOR SWITCH	1	10	AUTOMATIC		0969	Y	N	31919-H0100
	03	31919-X0100	GASKET-INHIBITOR SWITCH	1		AUTOMATIC	1069		Y	N	31919-H0100
	1201	08160-61610	BOLT-INHIBITOR SWITCH	1	50	AUTOMATIC					
	1301	31913-E0100	LEVER-RANGE SELECT	1	1	AUTOMATIC R DRIVE					
	02	31913-E1200	LEVER-RANGE SELECT	1	1	AUTOMATIC L DRIVE		0969			
	03	31913-E4001	LEVER-RANGE SELECT	1	5	AUTOMATIC LD L23 J20	0969		Y	Y	31913-E1200
*	1401	08911-34410	NUT	1	50	AUTOMATIC LD L20A L24	1069				
	02	01211-00011	NUT	1	10	AUTOMATIC LD L20A L24			Y	N	08911-34410
	1501	08916-34410	WASHER-LOCK	1	10	AUTOMATIC					
	1601	32703-78102	ASSY-PINION SPEEDOMETER(18T)	1	1	AUTOMATIC J20 R DRIVE		0969			
	02	32703-78101	ASSY-PINION SPEEDOMETER(17T)	1	1	AUTOMATIC L23 J20 L DRIVE		0969			
	03	32703-78104	ASSY-PINION SPEEDOMETER(20T)	1	1	AUTOMATIC L24 L20A	1069				
	1701	32707-78000	SLEEVE-SPEEDOMETER PINION	1	1	AUTOMATIC		0969			
	02	32707-66300	SLEEVE-SPEEDOMETER PINION	1	1	AUTOMATIC L24 L20A	1069				
	1801	32709-14600	SEAL-SPEEDOMETER PINION	1	10	AUTOMATIC					

NOTE:

© 1972 NISSAN MOTOR CO., LTD.

REVISED: DECEMBER, 1972

PRINTED IN JAPAN

TRANSMISSION CASE (AUTOMATIC)-3N71A-

S	KEY NO.	PART NO.	DESCRIPTION	Q'TY	UNIT PKG FOR DIST.	APPLIED MODEL	APPLIED DATE FROM	APPLIED DATE UP TO	ICA N	ICA F	SUPERSEDED
	1901	32710-14600	SEAL-'O'RING	1	10	AUTOMATIC					
	2001	32712-61000	PIN-RETAINING	1	10	AUTOMATIC					
	2101	32718-14600	PLATE-LOCK	1	10	AUTOMATIC					
	2201	08915-13610	WASHER-LOCK	1	50	AUTOMATIC					
	2301	08110-61210	BOLT-SPEEDOMETER	1	50	AUTOMATIC					
	2401	31881-77550	CONNECTOR-OIL TUBE	2	5	AUTOMATIC					
	2501	31882-20300	NUT-OIL TUBE	2	50	AUTOMATIC					
	2601	31883-20301	SEAL-'O'RING	2	20	AUTOMATIC					
*	2701	31941-H0101	ASSY-SOLENOID DOWN SHIFT	1	1	AUTOMATIC					
*	02	31941-X0101	ASSY-SOLENOID DOWN SHIFT	1	1	AUTOMATIC			Y	N	31941-H0101
	03	31941-X0102	ASSY-SOLENOID DOWN SHIFT	1	5	AUTOMATIC	0969		Y	N	31941-X0101
*	2801	31933-20300	SEAL-'O'RING	2	1	AUTOMATIC					
	02	31933-X0100	SEAL-'O' RING	2	10	AUTOMATIC	0969		Y	N	31933-20300
	2901	31931-H0101	ASSY-DIAPHRAGM VACUUM	1	1	AUTOMATIC					
*	02	31931-X0100	ASSY-DIAPHRAGM	1	1	AUTOMATIC			Y	N	31931-H0101
*	3301	31932-20303	ROD-DIAPHRAGM 29.0MM USE FIT ONE	1	10	AUTOMATIC					
	02	31932-X0103	ROD-DIAPHRAGM 29.0MM USE FITONE	1	5	AUTOMATIC		0969	Y	N	31932-20303
*	03	31932-20304	ROD-DIAPHRAGM 29.5MM USE FIT ONE	1	10	AUTOMATIC					
	04	31932-X0104	ROD-DIAPHRAGM 29.5MM USE FITONE	1	5	AUTOMATIC		0969	Y	N	31932-20304
*	05	31932-20300	ROD-DIAPHRAGM 30.0MM USE FIT ONE	1	10	AUTOMATIC					

NOTE:

© 1972 NISSAN MOTOR CO., LTD.

PRINTED IN JAPAN

TRANSMISSION CASE (AUTOMATIC) - 3N71A -

S	KEY NO.	PART NO.	DESCRIPTION	Q'TY	UNIT PKG FOR DIST.	APPLIED MODEL	APPLIED DATE FROM	APPLIED DATE UP TO	ICA N	ICA F	SUPERSEDED
	3006	31932-X0100	ROD-DIAPHRAGM 30.MM USE FITONE	1	5	AUTOMATIC			Y	N	31932-20300
•	07	31932-20302	ROD-DIAPHRAGM 30.5MM USE FIT ONE	1	10	AUTOMATIC					
	08	31932-X0102	ROD-DIAPHRAGM 30.5MM USE FITONE	1	5	AUTOMATIC			Y	N	31932-20302
•	09	31932-20301	ROD-DIAPHRAGM 31.1MM USE FIT ONE	1	10	AUTOMATIC					
	10	31932-X0101	ROD-DIAPHRAGM 31.1MM USE FITONE	1	5	AUTOMATIC			Y	N	31932-20301
	3101	31061-E0200	TUBE-VACUUM	1	5	AUTOMATIC J20		0969			
	02	31061-E0100	TUBE-VACUUM	1	5	AUTOMATIC L23		0969			
	03	31061-E3000	TUBE-VACUUM	1	5	AUTOMATIC L24 L20A	1069				
	3201	31037-E4000	CLAMP-VACUUM TUBE	1		AUTOMATIC L23		0969			
	3301	31072-E4000	CLAMP-VACUUM TUBE	1	10	AUTOMATIC L23		0969			
	3401	08915-13610	WASHER-SPRING	1	50	AUTOMATIC L23		0969			
	3501	08915-43610	WASHER-PLAIN	1	50	AUTOMATIC L23		0969			
	3601	08913-10610	NUT-SQUARE	1	50	AUTOMATIC L23		0969			
	3701	31067-E0100	JOINT-TUBE	1	5	AUTOMATIC					
	3801	31063-E0300	CONNECTOR-VACUUM	1	5	AUTOMATIC J20		0969			
	02	31063-E0700	CONNECTOR-VACUUM	1	1	AUTOMATIC L23		0969			
	03	31063-E3000	CONNECTOR-VACUUM	1		AUTOMATIC L24 L20A	1069				
	3901	31064-20300	TUBE-ELBOW	1	5	AUTOMATIC					
	4001	31065-E0100	CLAMP-VACUUM TUBE	1		AUTOMATIC L23 L24 L20A					

NOTE:

© 1972 NISSAN MOTOR CO., LTD.

PRINTED IN JAPAN

TRANSMISSION CASE (AUTOMATIC) -3N71A-

S	KEY NO.	PART NO.	DESCRIPTION	Q'TY	UNIT PKG FOR DIST.	APPLIED MODEL	APPLIED DATE FROM	APPLIED DATE UP TO	ICA N	ICA F	SUPERSEDED
	4002	31065-E0200	CLAMP-VACUUM TUBE	1		AUTOMATIC J20		0969			
	03	31065-A4000	CLAMP-VACUUM TUBE	1	5	AUTOMATIC L24 L20A	1069				
	4101	30422-73400	COVER-DUST CLUTCH HOUSING	1	1	AUTOMATIC L23 L24 L20A		0969			
	02	30422-21000	COVER-DUST CLUTCH HOUSING	1	1	AUTOMATIC L24 L20A	1069				
	4201	08110-61210	BOLT FIXING DUST COVER	4	50	AUTOMATIC L24 L23 L20A					
	02	08110-83510	BOLT-FIXING REAR PLATE	2	25	AUTOMATIC J20		0969			
	4301	08915-13610	WASHER FIX DUST COVER	4	50	AUTOMATIC L23 L24 L20A			C	N	08110-83510
	02	08915-13810	WASHER FIX DUST COVER	2	50	AUTOMATIC J20		0969			
	4401	08911-10810	NUT	2	50	AUTOMATIC J20		0969	C	N	08915-13810
	4501	31080-77500	PIPE-OIL CHARGING	1	1	AUTOMATIC J20 L23		0969			
	02	31080-E3000	PIPE-OIL CHARGING	1	1	AUTOMATIC L24 L20A	1069				
	4601	31086-20301	GAUGE-OIL LEVEL	1	1	AUTOMATIC					
	4701	31084-20300	SEAL-O'RING	1	10	AUTOMATIC					
•	4901	08110-62510	BOLT FIX OIL CHARGING PIPE	1	50	AUTOMATIC L23 L24 L20A					
	02	01111-00032	BOLT FIX OIL CHARGING PIPE	1	50	AUTOMATIC L23 L24 L20A			Y	N	08110-62510
	03	08110-63010	BOLT FIX OIL CHARGING PIPE	1	50	AUTOMATIC J20		0969			
	4901	08915-13610	WASHER FIX OIL CHARGING PIPE	1	50	AUTOMATIC L23 L24 L20A					
	02	08915-63610	WASHER FIX OIL CHARGING PIPE	1		AUTOMATIC J20		0969			

NOTE:

© 1972 NISSAN MOTOR CO., LTD.

PRINTED IN JAPAN

TRANSMISSION CASE (AUTOMATIC) -3N71A-

S	KEY NO.	PART NO.	DESCRIPTION	Q'TY	UNIT PKG FOR DIST.	APPLIED MODEL	APPLIED DATE FROM	APPLIED DATE UP TO	ICA N	ICA F	SUPERSEDED
	5001	08911-10610	NUT FIX OIL CHARGING PIPE	1	50	AUTOMATIC J20 L23		0969			
	5101	08110-61262	BOLT WITH WASHER OIL PAN	14	50	AUTOMATIC					
	5201	31381-20301	BREATHER-AIR	1		AUTOMATIC J20 L23		0969			
	02	31381-A4000	BREATHER-AIR	1	10	AUTOMATIC J20 L23		0969	C	N	31381-20301
	03	31381-E4000	BREATHER-AIR	1	10	AUTOMATIC L24 L20A	1069				
●	5301	32136-07200	SEAL-OIL REAR EXTENSION	1	10	AUTOMATIC J20 L20A		0969			
	02	32136-E0100	SEAL-OIL REAR EXTENSION	1	50	AUTOMATIC J20 L20A			Y	N	32136-07200
	03	32136-20100	SEAL-OIL REAR EXTENSION	1	10	AUTOMATIC L23 L24					
●	5401	00931-10200	PLUG-SQUARE HEAD	4	50	AUTOMATIC					
	02	00931-10210	PLUG-SQUARE HEAD	4	50	AUTOMATIC			Y	N	00931-10200
	5501	00134-64010	BOLT-TRANSMISSION TO ENGINE	4	25	AUTOMATIC J20		0969			
	02	00131-63010	BOLT-TRANSMISSION TO ENGINE	4	50	AUTOMATIC L23		0969			
	03	08131-04010	BOLT-TRANSMISSION TO ENGINE	4	25	AUTOMATIC L24 L20A	1069				
	5601	08915-24010	WASHER-SPRING	4	50	AUTOMATIC J20 L23		0969			
	02	08915-14010	WASHER-SPRING	4	50	AUTOMATIC L24 L20A	1069				
	5701	00911-24610	NUT	2	50	AUTOMATIC J20		0969			
	5801	OIL07-00004	OIL-TORQUE CONVERTER (4LX6 CALTEX TEXAMATIC4571A)	1	1	AUTOMATIC					
●	5901	31000-E0125	KIT-GASKET & SEAL	1		AUTOMATIC					
	02	31000-H0126	KIT-GASKET & SEAL	1	1	AUTOMATIC	1069		Y	Y	31000-E0125

NOTE:

ILLUSTRATION **172**

© 1972 NISSAN MOTOR CO., LTD.

REVISED: DECEMBER, 1972

PRINTED IN JAPAN

NOTE

Printed in Japan

NISSAN MOTOR CO., LTD.

PUB. No.: C-0020 VOL 2

ILLUSTRATION No.: 173 through 175

TITLE: AUTOMATIC TRANSMISSION PARTS (3N71A)
for DISTRIBUTOR use Only

This ILLUSTRATION has nothing to do with your vehicles.

© 1972 NISSAN MOTOR CO., LTD.

Printed in Japan

NOTE

Printed in Japan

NISSAN MOTOR CO., LTD.

TRANSMISSION CONTROL FORK & LEVER (3 SPEED R DRIVE)

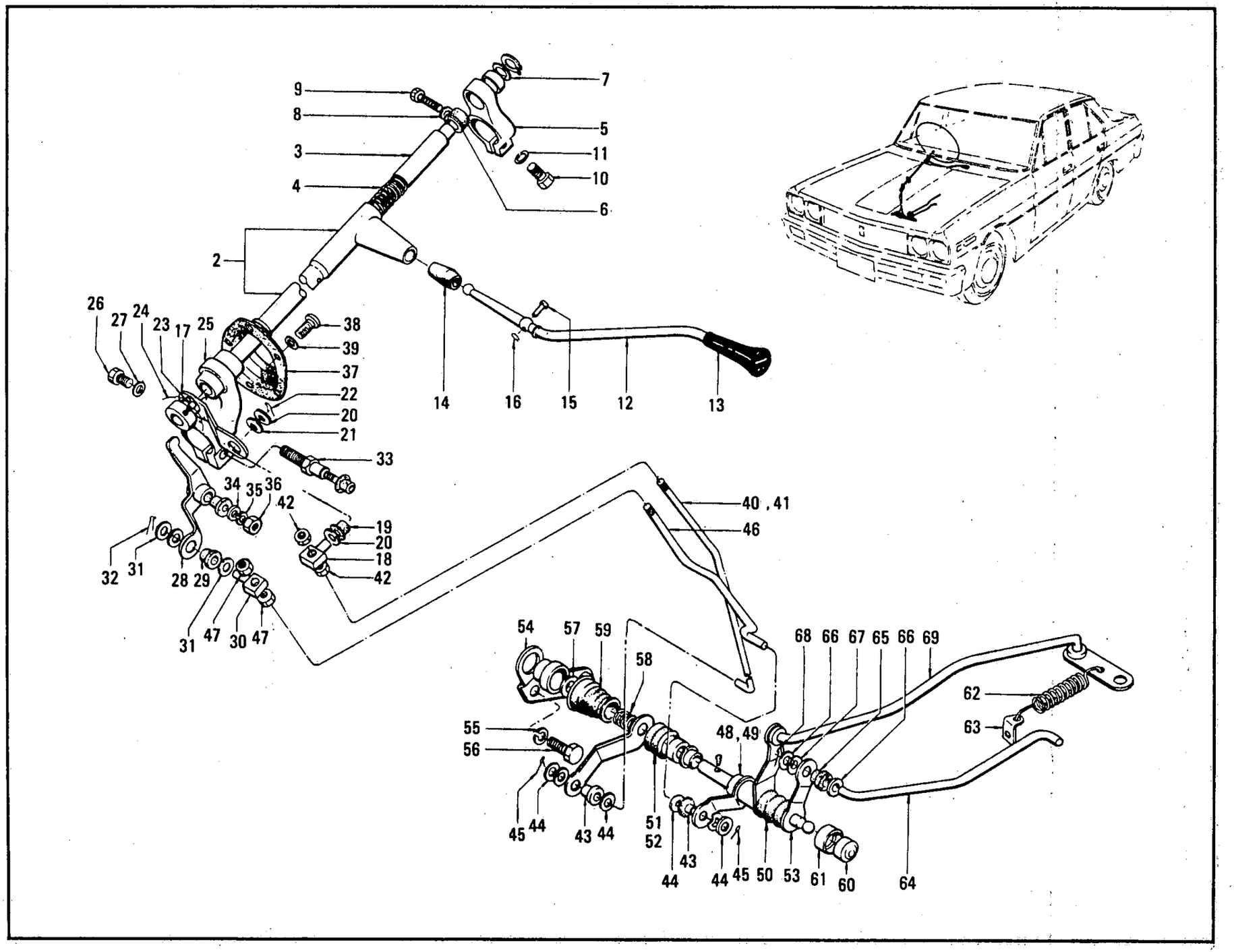

© 1972 NISSAN MOTOR CO., LTD.

ILLUSTRATION **176**

REVISED: DECEMBER, 1972

PRINTED IN JAPAN

C

TRANSMISSION CONTROL FORK & LEVER (3 SPEED R DRIVE)

S	KEY NO.	PART NO.	DESCRIPTION	QTY	UNIT PKG FOR DIST.	APPLIED MODEL	APPLIED DATE FROM	APPLIED DATE UP TO	ICA N	ICA F	SUPERSEDED
	101	34102-E0306	ASSY-DEVICE CONTROL	1	1	3 SPEED(R DRIVE)					
	201	34103-E0305	ASSY-ROD CONTROL	1	1	3 SPEED(R DRIVE)					
	02	34103-E0300	ASSY-ROD CONTROL FOR COLLAPSIBLE STEERING	1	1	OP 3 SPEED (R DRIVE)					
	301	34113-73200	INSERT-CONTROL ROD	1	2	3 SPEED(R DRIVE)					
	401	34116-09400	SPRING-RETURN	1	5	3 SPEED(R DRIVE)					
	501	34104-73000	BRACKET-SUPPORT UPPER	1	1	3 SPEED(R DRIVE)					
	601	34105-73000	BUSH-BRACKET SUPPORT UPPER	1	10	3 SPEED(R DRIVE)					
	701	34135-73000	WASHER-INSERT CONTROL	1	10	3 SPEED(R DRIVE)					
	801	34134-04100	WASHER	1	10	3 SPEED(R DRIVE)					
	901	34128-30100	SCREW-SOCKET	1	10	3 SPEED(R DRIVE)					
	1001	34129-73001	BOLT-LOCATING BRACKET	1	10	3 SPEED(R DRIVE)					
	1101	00916-11510	WASHER-INTERNAL	1	50	3 SPEED(R DRIVE)					
*	1201	34110-E0301	ASSY-HAND LEVER	1	1	3 SPEED(R DRIVE)					
	02	34110-E0302	ASSY-HAND LEVER	1	1	3 SPEED(R DRIVE)		0969	Y	Y	34110-E0301
*	1301	34119-E2300	KNOB-HAND LEVER	1	5	3 SPEED(R DRIVE)					
	02	34119-E3200	KNOB-HAND LEVER	1	5	3 SPEED(R DRIVE)			Y	N	34119-E2300
	1401	34115-73200	INSULATOR-CONTROL LEVER	1	10	3 SPEED(R DRIVE)					
	1501	34124-73200	PIN-PIVOT HAND LEVER	1	10	3 SPEED(R DRIVE)					
	1601	34125-36700	RING-SNAP	1	50	3 SPEED(R DRIVE)					
	1701	34441-E0200	ASSY-LEVER CHANGE SPEED	1	1	3 SPEED(R DRIVE)					
	1801	34410-04100	TRUNNION-SHIFT ROD	1	5	3 SPEED(R DRIVE)					
*	1901	34407-73200	INSULATOR-SHIFT ROD	1	10	3 SPEED(R DRIVE)					

NOTE:

© 1972 NISSAN MOTOR CO., LTD.

PRINTED IN JAPAN

TRANSMISSION CONTROL FORK & LEVER (3 SPEED R DRIVE)

S	KEY NO.	PART NO.	DESCRIPTION	QTY	UNIT PKG FOR DIST.	APPLIED MODEL	APPLIED DATE FROM	APPLIED DATE UP TO	ICA N	ICA F	SUPERSEDED
	1902	34552-89900	INSULATOR-SHIFT ROD	1	10	3 SPEED(R DRIVE)					
•	2001	34414-04100	WASHER-PLAIN	2	10	3 SPEED(R DRIVE)					
	2101	34419-04100	WASHER-SPRING	1	10	3 SPEED(R DRIVE)					
	2201	00921-21810	PIN-COTTER	1	50	3 SPEED(R DRIVE)					
	2301	34434-30000	SCREW-LOCKING	1	10	3 SPEED(R DRIVE)					
	2401	34473-30000	WIRE-LOCKING SCREW	1	10	3 SPEED(R DRIVE)					
	2501	34400-78201	ASSY-LOWER BRACKET	1	1	3 SPEED(R DRIVE)					
	02	34400-E0301	ASSY-LOWER BRACKET FOR COLLAPSIBLE STEERING	1	1	OP 3 SPEED (R DRIVE)					
	2601	34129-73001	BOLT	1	10	3 SPEED(R DRIVE)					
	2701	00916-11510	WASHER	1	50	3 SPEED(R DRIVE)					
	2801	34431-78100	ASSY-LEVER SELECT GEAR	1	1	3 SPEED(R DRIVE)		0969			
	02	34431-E3205	ASSY-LEVER SELECT GEAR	1	1	3 SPEED(R DRIVE)	1069				
	03	34431-E0200	ASSY-LEVER SELECT GEAR FOR COLLAPSIBLE STEERING	1	1	OP 3 SPEED (R DRIVE)		0969			
•	04	34431-E3200	ASSY-LEVER FOR COLLAPSIBLE STEERING	1	1	OP 3 SPEED (R DRIVE)	1069				
	05	34431-E3201	ASSY-LEVER FOR COLLAPSIBLE STEERING	1	1	OP 3 SPEED (R DRIVE)			Y	N	34431-E3200
•	2901	34407-73200	INSULATOR-SHIFT ROD	1	10	3 SPEED(R DRIVE)					
	02	34552-89900	INSULATOR-SHIFT ROD	1	10	3 SPEED(R DRIVE)			Y	N	34407-73200
	3001	34410-04100	TRUNNION-SHIFT ROD	1	5	3 SPEED(R DRIVE)					
•	3101	34414-04100	WASHER-PLAIN	2	10	3 SPEED(R DRIVE)					
	02	01311-00021	WASHER-PLAIN	2	10	3 SPEED(R DRIVE)			Y	N	34414-04100
	3201	00921-21810	PIN-COTTER	1	50	3 SPEED(R DRIVE)					

NOTE:

© 1972 NISSAN MOTOR CO., LTD.

REVISED: DECEMBER, 1972
PRINTED IN JAPAN

TRANSMISSION CONTROL FORK & LEVER (3 SPEED R DRIVE)

S	KEY NO.	PART NO.	DESCRIPTION	QTY	UNIT PKG FOR DIST.	APPLIED MODEL	APPLIED DATE FROM	APPLIED DATE UP TO	ICA N	ICA F	SUPERSEDED
	3301	- 34409-73200	BOLT	1	10	3 SPEED(R DRIVE)					
	3401	- 00915-41410	WASHER-PLAIN	1	50	3 SPEED(R DRIVE)					
	3501	- 00915-11410	WASHER-SPRING	1	50	3 SPEED(R DRIVE)					
	3601	- 00911-14410	NUT	1	50	3 SPEED(R DRIVE)					
	3701	- 48340-E0205	ASSY-GROMMET STEERING HOLE	1	1	3 SPEED(R DRIVE)					
	3801	- 00314-41814	SCREW-TAPPING	6	50	3 SPEED(R DRIVE)					
	3901	- 00915-41410	WASHER-PLAIN	6	50	3 SPEED(R DRIVE)					
	4001	- 34445-E0205	ROD-SHIFT UPPER	1	1	3 SPEED(R DRIVE)		0969			
	02	- 34445-E3205	ROD-SHIFT UPPER	1	1	3 SPEED(R DRIVE)	1069				
	4101	- 34445-E0201	ROD-SHIFT UPPER FOR	1	1	OP 3 SPEED (R DRIVE)		0969			
	02	- 34445-E3200	ROD-SHIFT UPPER FOR COLLAPSIBLE STEERING	1	1	OP 3 SPEED (R DRIVE)	1069				
	4201	- 41005-16505	NUT	4	10	3 SPEED(R DRIVE)					
*	4301	- 34407-73200	INSULATOR-SHIFT	2	10	3 SPEED(R DRIVE)					
	02	- 34552-89900	INSULATOR-SHIFT	2	10	3 SPEED(R DRIVE)	1069		Y	N	34407-73200
*	4401	- 34414-04100	WASHER-PLAIN	4	10	3 SPEED(R DRIVE)					
	02	- 01311-00021	WASHER-PLAIN	4	10	3 SPEED(R DRIVE)			Y	N	34414-04100
	4501	- 00921-21810	PIN COTTER	2	50	3 SPEED(R DRIVE)					
	4601	- 34415-78100	ROD-SELECT UPPER	1	1	3 SPEED(R DRIVE)		0969			
	02	- 34415-E3205	ROD-SELECT UPPER	1	1	3 SPEED(R DRIVE)	1069				
	03	- 34415-E0201	ROD-SELECT UPPER FOR COLLAPSIBLE STEERING	1	1	OP 3 SPEED (R DRIVE)		0969			
	04	- 34415-E3200	ROD-SELECT UPPER FOR COLLAPSIBLE STEERING	1	1	OP 3 SPEED (R DRIVE)	1069				

NOTE:

© 1972 NISSAN MOTOR CO., LTD.

PRINTED IN JAPAN

TRANSMISSION CONTROL FORK & LEVER (3 SPEED R DRIVE)

S	KEY NO.	PART NO.	DESCRIPTION	QTY	UNIT PKG FOR DIST.	APPLIED MODEL	APPLIED DATE FROM	APPLIED DATE UP TO	ICA N	ICA F	SUPERSEDED
	4701	34505-E0201	ASSY-TUBE CROSS	1	1	3 SPEED(R DRIVE)					
	4801	34505-E0701	ASSY-CROSS TUBE FOR COLLAPSING STEERING	1	1	OP STD DIESEL RD		0969			
	4901	34530-73001	BUSH-CROSS TUBE	1	10	3 SPEED(R DRIVE)					
	5001	34536-73000	COVER-CROSS TUBE	1	5	3 SPEED(R DRIVE)					
	5101	34537-73000	COVER-CROSS TUBE	1	10	3 SPEED(R DRIVE)					
	5201	34503-78200	ASSY-LEVER CROSS SHAFT INNER	1	1	3 SPEED(R DRIVE)					
●	5301	34520-78100	ASSY-BRACKET CROSS	1	1	3 SPEED(R DRIVE)					
	02	34520-E3200	ASSY-BRACKET CROSS	1	1	3 SPEED(R DRIVE)		0969	Y	Y	34520-78100
	5401	00915-11610	WASHER-SPRING LOCK	2	50	3 SPEED(R DRIVE)					
	5501	00114-62010	BOLT	2	50	3 SPEED(R DRIVE)					
	5601	34462-61000	BUSH-SPHERICAL CROSS SHAFT	1	2	3 SPEED(R DRIVE)					
	5701	34463-61000	SPRING-RETAINING	1	5	3 SPEED(R DRIVE)					
	5801	34459-61000	COVER-CROSS SHAFT OUTER	1	5	3 SPEED(R DRIVE)					
	5901	34465-61000	SOCKET-BALL CROSS SHAFT	1	10	3 SPEED(R DRIVE)					
	6001	34458-61000	COVER-CROSS SHAFT INNER	1	5	3 SPEED(R DRIVE)					
	6101	34423-78100	SPRING-RETURN SELECT LEVER	1	10	3 SPEED(R DRIVE)					
	6201	34424-78100	RETAINER-SPRING	1	10	3 SPEED(R DRIVE)					
	6301	34438-78200	ROD-SHIFT LOWER	1	1	3 SPEED(R DRIVE)					
●	6401	34407-73200	INSULATOR-SHIFT ROD	4	10	3 SPEED(R DRIVE)					
	02	34552-89900	INSULATOR-SHIFT ROD	4	10	3 SPEED(R DRIVE)			Y	N	34407-73200
●	6501	34414-04100	WASHER-PLAIN	8	10	3 SPEED(R DRIVE)					
	02	01311-00021	WASHER-PLAIN	8	10	3 SPEED(L DRIVE)		0969	Y	N	34414-04100

NOTE:

© 1972 NISSAN MOTOR CO., LTD.

REVISED: DECEMBER, 1972
PRINTED IN JAPAN

TRANSMISSION CONTROL FORK & LEVER (3 SPEED R DRIVE)

S	KEY NO.	PART NO.	DESCRIPTION	QTY	UNIT PKG FOR DIST.	APPLIED MODEL	APPLIED DATE FROM	APPLIED DATE UP TO	ICA N	ICA F	SUPERSEDED
	6601	- 34419-04100	WASHER-SPRING	4	10	3 SPEED(R DRIVE)					
	6701	- 00921-21810	PIN-COTTER	4	50	3 SPEED(R DRIVE)					
	6801	- 34436-78200	ROD-SELECT LOWER	1	1	3 SPEED(R DRIVE)					

NOTE:

© 1972 NISSAN MOTOR CO., LTD.

PRINTED IN JAPAN

NOTE

NISSAN MOTOR CO., LTD.

Printed in Japan

NOTE

Printed in Japan

NISSAN MOTOR CO., LTD.

TRANSMISSION CONTROL FORK & LEVER (3 SPEED L DRIVE)

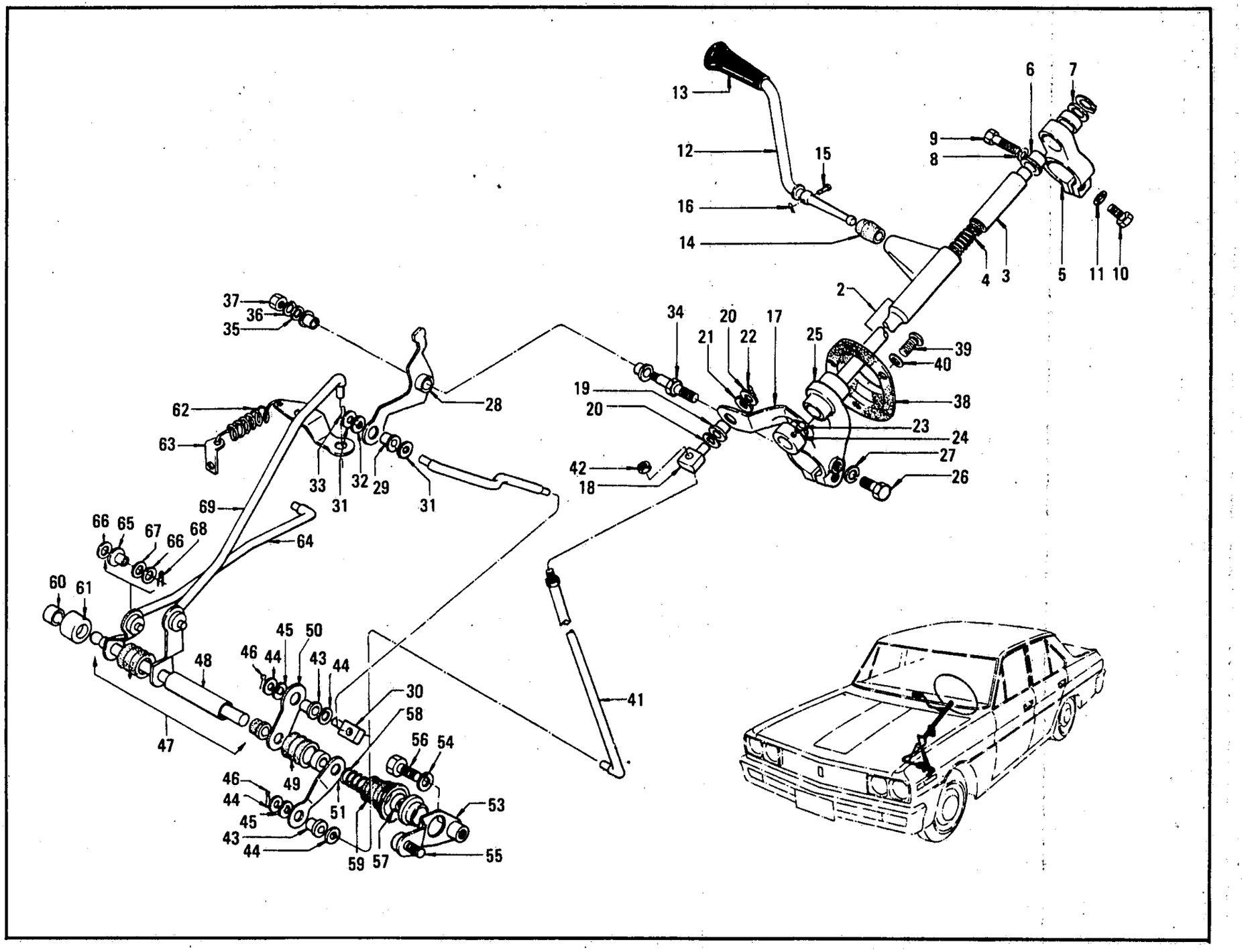

© 1972 NISSAN MOTOR CO., LTD.

ILLUSTRATION **176A**

REVISED: DECEMBER, 1972

PRINTED IN JAPAN

TRANSMISSION CONTROL FORK & LEVER (3 SPEED L DRIVE)

S	KEY NO.	PART NO.	DESCRIPTION	QTY	UNIT PKG FOR DIST.	APPLIED MODEL	APPLIED DATE FROM	APPLIED DATE UP TO	ICA N	ICA F	SUPERSEDED
•	101	34102-E1306	ASSY-DEVICE CONTROL	1	1	3 SPEED(L DRIVE)					
	02	34102-E1316	ASSY-DEVICE CONTROL	1	1	3 SPEED (L DRIVE)			Y	N	34102-E1306
	03	34102-E1300	ASSY-DEVICE CONTROL	1		OP 3 SPEED (L DRIVE)					
	201	34103-E0305	ASSY-ROD CONTROL	1	1	3 SPEED(L DRIVE)					
	02	34103-E0300	ASSY-ROD CONTROL FOR COLLAPSIBLE STEERING	1	1	OP 3 SPEED (L DRIVE)					
	301	34113-73200	INSERT-CONTROL ROD	1	2	3 SPEED(L DRIVE)					
	401	34116-09400	SPRING-RETURN	1	5	3 SPEED(L DRIVE)					
	501	34104-73000	BRACKET-SUPPORT UPPER	1	1	3 SPEED(L DRIVE)					
	601	34105-73000	BUSH-BRACKET SUPPOR UPPER	1	10	3 SPEED(L DRIVE)					
	701	34135-73000	WASHER-INSERT CONTROL	1	10	3 SPEED(L DRIVE)					
	801	34134-04100	WASHER	1	10	3 SPEED(L DRIVE)					
	901	34128-30100	SCREW	1	10	3 SPEED(L DRIVE)					
	1001	34129-73001	BOLT-LOCATING BRACKET	1	10	3 SPEED(L DRIVE)					
	1101	00916-11510	WASHER-INTERNAL TOOTH	1	50	3 SPEED(L DRIVE)					
•	1201	34110-E0301	ASSY-HAND LEVER	1	1	3 SPEED(L DRIVE)					
	02	34110-E0302	ASSY-HAND LEVER	1	1	3 SPEED(L DRIVE)			Y	N	34110-E0301
•	1301	34119-E2300	KNOB-HAND LEVER	1	5	3 SPEED(L DRIVE)					
	02	34119-E3200	KNOB-HAND LEVER	1	5	3 SPEED(L DRIVE)			Y	N	34119-E2300
	1401	34115-73200	INSULATOR-CONTROL LEVER	1	10	3 SPEED(L DRIVE)					
	1501	34124-73200	PIN-PIVOT HAND LEVER	1	10	3 SPEED(L DRIVE)					
	1601	34125-36700	RING-SNAP	1	50	3 SPEED(L DRIVE)					
	1701	34441-E1205	ASSY-LEVER CHANGE SPEED	1	1	3 SPEED(L DRIVE)					

NOTE:

© 1972 NISSAN MOTOR CO., LTD.

PRINTED IN JAPAN

TRANSMISSION CONTROL FORK & LEVER (3 SPEED L DRIVE)

S	KEY NO.	PART NO.	DESCRIPTION	QTY	UNIT PKG FOR DIST.	APPLIED MODEL	APPLIED DATE FROM	APPLIED DATE UP TO	ICA N	ICA F	SUPERSEDED
	1702	34441-E1200	ASSY-LEVER CHANGE SPEED FOR COLLAPSIBLE STEERING	1	1	OP 3 SPEED (L DRIVE)					
	1801	34410-04100	TRUNNION-SHIFT ROD	1	5	3 SPEED(L DRIVE)					
•	1901	34407-73200	INSULATOR-SHIFT ROD	1	10	3 SPEED(L DRIVE)					
	02	34552-89900	INSULATOR-SHIFT ROD	1	10	3 SPEED(L DRIVE)			Y	N	34407-73200
•	2001	34414-04100	WASHER-PLAIN	2	10	3 SPEED(L DRIVE)					
	02	01311-00021	WASHER-PLAIN	2	10	3 SPEED(L DRIVE)			Y	N	34414-04100
	2101	34419-04100	WASHER-SPRING	1	10	3 SPEED(L DRIVE)					
	2201	00921-21810	PIN-COTTER	1	50	3 SPEED(L DRIVE)					
	2301	34434-30000	SCREW-LOCKING	1	10	3 SPEED(L DRIVE)					
	2401	34473-30000	WIRE-LOCKING SCREW	1	10	3 SPEED(L DRIVE)					
	2501	34400-E1301	ASSY-BRACKET LOWER	1	1	OP 3 SPEED (L DRIVE)					
	02	34400-73700	ASSY-BRACKET LOWER	1	1	3 SPEED (L DRIVE) (GL-E HL-VE GL-QE)					
	03	34400-78401	ASSY-BRACKET LOWER	1	1	3 SPEED (L DRIVE) (GL HL-V HL-Q GL-Q)					
	2601	34129-73001	BOLT	1	10	3 SPEED(L DRIVE)					
	2701	00916-11510	WASHER	1	50	3 SPEED(L DRIVE)					
	2801	34431-E1200	ASSY-LEVER SELECT GEAR	1	1	3 SPEED(L DRIVE)					
•	2901	34407-73200	INSULATOR-SHIFT ROD	1	10	3 SPEED(L DRIVE)					
	02	34552-89900	INSULATOR-SHIFT ROD	1	10	3 SPEED(L DRIVE)			Y	N	34407-73200
	3001	34410-04100	TRUNNION-SHIFT ROD	1	5	3 SPEED(L DRIVE)					
•	3101	34414-04100	WASHER-PLAIN	2	10	3 SPEED(L DRIVE)					

NOTE:

© 1972 NISSAN MOTOR CO., LTD.

REVISED: DECEMBER, 1972
PRINTED IN JAPAN

TRANSMISSION CONTROL FORK & LEVER (3 SPEED L DRIVE)

S	KEY NO.	PART NO.	DESCRIPTION	QTY	UNIT PKG FOR DIST.	APPLIED MODEL	APPLIED DATE FROM	APPLIED DATE UP TO	ICA N	ICA F	SUPERSEDED
	3102	01311-00021	WASHER-PLAIN	2	10	3 SPEED(L DRIVE)			Y	N	34414-04100
	3201	34419-04100	WASHER-SPRING	1	10	3 SPEED(L DRIVE)					
	3301	00921-21810	PIN-COTTER	1	50	3 SPEED(L DRIVE)					
	3401	34409-73200	BOLT	1	10	3 SPEED(L DRIVE)					
	3501	00915-41410	WASHER-PLAIN	1	50	3 SPEED(L DRIVE)					
	3601	00915-11410	WASHER-SPRING	1	50	3 SPEED(L DRIVE)					
	3701	00911-14410	NUT	1	50	3 SPEED(L DRIVE)					
	3801	48340-E1205	ASSY-GROMMET STEERING HOLE	1	1	3 SPEED(L DRIVE)					
	3901	00314-41814	SCREW-MACHINE	6	50	3 SPEED(L DRIVE)					
	4001	00915-41410	WASHER-PLAIN	6	50	3 SPEED(L DRIVE)					
	4101	34445-E1205	ROD-SHIFT UPPER	1	1	3 SPEED(L DRIVE)					
	02	34445-E1201	ROD-SHIFT UPPER FOR COLLAPSIBLE STEERING	1	1	OP 3 SPEED (L DRIVE)					
	4201	41005-16505	NUT	4	10	3 SPEED(L DRIVE)					
•	4301	34407-73200	INSULATOR-SHIFT	2	10	3 SPEED(L DRIVE)					
	02	34552-89900	INSULATOR-SHIFT	2	10	3 SPEED(L DRIVE)					
•	4401	34414-04100	WASHER PLAIN	2	10	3 SPEED(L DRIVE)					
	02	01311-00021	WASHER-PLAIN	2	10	3 SPEED(L DRIVE)			Y	N	34414-04100
	4501	34419-04100	WASHER-SPRING	2	10	3 SPEED(L DRIVE)					
	4601	00921-21810	PIN-COTTER	2	50	3 SPEED(L DRIVE)					
	4701	34505-E1315	ASSY-CROSS TUBE	1	1	3 SPEED(L DRIVE)					
	4801	34530-73001	BUSH-CROSS TUBE	1	10	3 SPEED(L DRIVE)					
	4901	34537-73000	COVER-CROSS TUBE	1	10	3 SPEED(L DRIVE)					

NOTE:

© 1972 NISSAN MOTOR CO., LTD.

PRINTED IN JAPAN

TRANSMISSION CONTROL FORK & LEVER (3 SPEED L DRIVE)

S	KEY NO.	PART NO.	DESCRIPTION	QTY	UNIT PKG FOR DIST.	APPLIED MODEL	APPLIED DATE FROM	APPLIED DATE UP TO	ICA N	ICA F	SUPERSEDED
	5001	34503-77900	ASSY-LEVER CROSS SHAFT INNER	1	5	3 SPEED(L DRIVE)					
•	5101	34510-77900	ASSY-LEVER CROSS SHAFT INNER	1		3 SPEED(L DRIVE)					
	5201	34513-73000	PIN-CROSS SHAFT	1	10	3 SPEED(L DRIVE)					
	5301	34520-77900	ASSY-BRACKET CROSS SHAFT	1	1	3 SPEED(L DRIVE)					
	5401	00915-11610	WASHER-SPRING LOCK	1	50	3 SPEED(L DRIVE)					
	5501	00114-62010	BOLT	1	50	3 SPEED(L DRIVE)					
	5601	00114-63010	BOLT	1	10	3 SPEED(L DRIVE)					
	5701	00114-62010	BUSH-SPHERICAL CROSS SHAFT	1	50	3 SPEED(L DRIVE)					
	5801	00114-63010	SPRING-RETAINING	1	10	3 SPEED(L DRIVE)					
	5901	34459-61000	COVER-CROSS SHAFT OUTER	1	5	3 SPEED(L DRIVE)					
	6001	34465-61000	SOCKET-BALL CROSS SHAFT	1	10	3 SPEED(L DRIVE)					
	6101	34458-61000	COVER-CROSS SHAFT INNER	1	5	3 SPEED(L DRIVE)					
	6201	34423-78100	SPRING-RETURN SELECT LEVER	1	10	3 SPEED(L DRIVE)					
	6301	34424-78100	RETAINER-SPRING	1	10	3 SPEED(L DRIVE)					
	6401	34438-78200	ROD-SHIFT LOWER	1	1	3 SPEED(L DRIVE)					
•	6501	34407-73200	INSULATOR-SHIFT ROD	4	10	3 SPEED(L DRIVE)					
	02	34552-89900	INSULATOR-SHIFT ROD	4	10	3 SPEED(L DRIVE)			Y	N	34407-73200
•	6601	34414-04100	WASHER-PLAIN	8	10	3 SPEED(L DRIVE)					
	02	01311-00021	WASHER-PLAIN	8	10	3 SPEED(L DRIVE)			Y	N	34414-04100
	6701	34419-04100	WASHER-SPRING	4	10	3 SPEED(L DRIVE)					
	6801	00921-21810	PIN COTTER	4	50	3 SPEED(L DRIVE)					
	6901	34436-78400	ROD-SELECT LOWER	1	1	3 SPEED(L DRIVE)					

NOTE:

© 1972 NISSAN MOTOR CO., LTD.

REVISED: DECEMBER, 1972
PRINTED IN JAPAN

NOTE

Printed in Japan

NISSAN MOTOR CO., LTD.

TRANSMISSION CONTROL FORK & LEVER (4 SPEED R DRIVE)

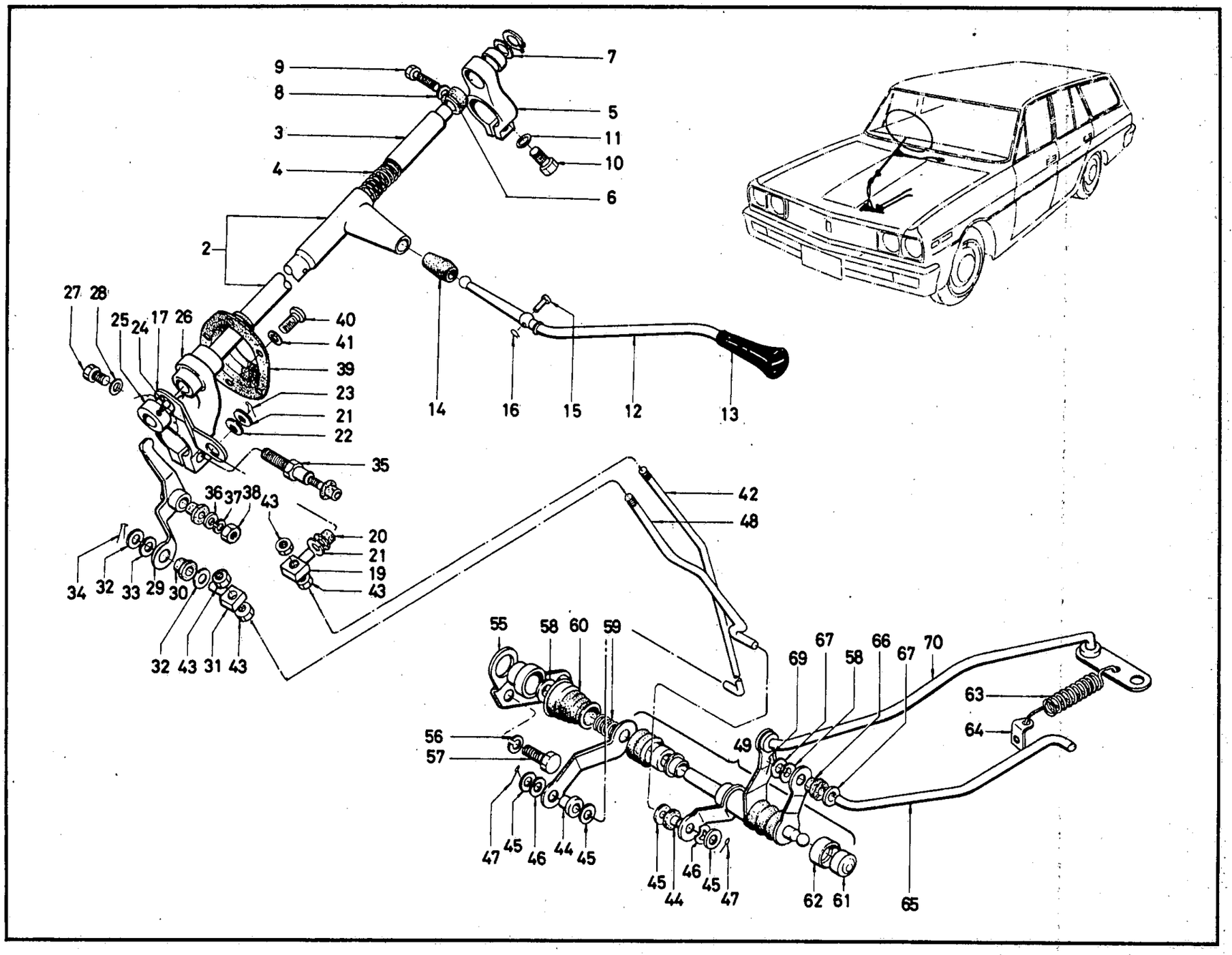

ILLUSTRATION **177**

© 1972 NISSAN MOTOR CO., LTD.

REVISED: DECEMBER, 1972

PRINTED IN JAPAN

TRANSMISSION CONTROL FORK & LEVER (4 SPEED R DRIVE)

S	KEY NO.	PART NO.	DESCRIPTION	QTY	UNIT PKG FOR DIST.	APPLIED MODEL	APPLIED DATE FROM	APPLIED DATE UP TO	ICA N	ICA F	SUPERSEDED
	101	34102-E0206	ASSY-DEVICE CONTROL	1	1	4 SPEED(R DRIVE)					
	02	34102-E0200	ASSY-DEVICE CONTROL FOR COLLAPSIBLE STEERING	1	1	OP 4 SPEED (R DRIVE)					
	201	34103-E0205	ASSY-ROD CONTROL	1	1	4 SPEED(R DRIVE)					
	02	34103-E0200	ASSY-ROD CONTROL FOR COLLAPSIBLE STEERING	1	1	OP 4 SPEED (R DRIVE)					
	301	34113-73200	INSERT-CONTROL ROD	1	2	4 SPEED(R DRIVE)					
	401	34116-09400	SPRING-RETURN	1	5	4 SPEED(R DRIVE)					
	501	34104-73000	BRACKET-SUPPORT UPPER	1	1	4 SPEED(R DRIVE)					
	601	34105-73000	BUSH-BRACKET SUPPORT	1	10	4 SPEED(R DRIVE)					
	701	34135-73000	WASHER-INSERT CONTROL ROD	1	10	4 SPEED(R DRIVE)					
	801	34134-04100	WASHER-'C'	1	10	4 SPEED(R DRIVE)					
	901	34128-30100	SCREW-SOCKET	1	10	4 SPEED(R DRIVE)					
	1001	34129-73001	BOLT-LOCATING BRACKET UPPER	1	10	4 SPEED(R DRIVE)					
	1101	00916-11510	WASHER-INTERNAL TOOTH	1	50	4 SPEED(R DRIVE)					
•	1201	34110-E0201	ASSY-HAND LEVER	1	1	4 SPEED(R DRIVE)					
	02	34110-E0202	ASSY-HAND LEVER	1	1	4 SPEED(R DRIVE)			Y	Y	34110-E0201
•	1301	34119-E2300	KNOB-HAND LEVER	1	5	4 SPEED(R DRIVE)					
	02	34119-E3200	KNOB-HAND LEVER	1	5	4 SPEED(R DRIVE)			Y	N	34119-E2300
	1401	34115-73200	INSULATOR-CONTROL LEVER	1	10	4 SPEED(R DRIVE)					
	1501	34124-73200	PIN-PIVOT HAND LEVER	1	10	4 SPEED(R DRIVE)					
	1601	34125-36700	SNAP-RING	1	50	4 SPEED(R DRIVE)					
	1701	34440-E0405	ASSY-LEVER CHANGE SPEED	1	1	4 SPEED(R DRIVE)					
	02	34440-E0400	ASSY-LEVER CHANGE SPEED FOR COLLAPSIBLE	1	1	OP 4 SPEED (R DRIVE)					

NOTE:

© 1972 NISSAN MOTOR CO., LTD.

PRINTED IN JAPAN

TRANSMISSION CONTROL FORK & LEVER (4 SPEED R DRIVE)

S	KEY NO.	PART NO.	DESCRIPTION	QTY	UNIT PKG FOR DIST.	APPLIED MODEL	APPLIED DATE FROM	APPLIED DATE UP TO	ICA N	ICA F	SUPERSEDED
	1801	34444-73200	STOPPER-SHIFT LEVER	1	10	4 SPEED(R DRIVE)					
	1901	34410-04100	TRUNNION-SHIFT ROD	1	5	4 SPEED(R DRIVE)					
*	2001	34407-73200	INSULATOR-SHIFT ROD	1	10	4 SPEED(R DRIVE)					
	02	34552-89900	INSULATOR-SHIFT ROD	1	10	4 SPEED(R DRIVE)			Y	N	34407-73200
*	2101	34414-04100	WASHER-PLAIN	2	10	4 SPEED(R DRIVE)					
	2201	34419-04100	WASHER-SPRING	1	10	4 SPEED(R DRIVE)					
	2301	00921-21810	PIN-COTTER	1	50	4 SPEED(R DRIVE)					
	2401	34434-30000	SCREW-LOCKING	1	10	4 SPEED(R DRIVE)					
	2501	34473-30000	WIRE-LOCKING SCREW	1	10	4 SPEED(R DRIVE)					
	2601	34400-E0200	ASSY-BRACKET LOWER	1	1	OP 4 SPEED (R DRIVE)					
	02	34400-78100	ASSY-BRACKET LOWER	1	1	4 SPEED (R DRIVE)					
	2701	34129-73001	BOLT	1	10	4 SPEED(R DRIVE)					
	2801	00916-11510	WASHER	1	50	4 SPEED(R DRIVE)					
	2901	34431-78100	ASSY-LEVER SELECT GEAR	1	1	4 SPEED(R DRIVE)		0969			
	02	34431-E3205	ASSY-LEVER SELECT GEAR	1	1	4 SPEED(R DRIVE)	1069		Y	N	34431-78100
	03	34431-E0200	ASSY-LEVER SELECT GEAR FOR COLLAPSIBLE STERING	1	1	OP 4 SPEED (R DRIVE)		0969			
*	04	34431-E3200	ASSY-LEVER SELECT GEAR FOR COLLAPSIBLE STERING	1	1	OP 4 SPEED (R DRIVE)	1069		Y	N	34431-E0200
	05	34431-E3201	ASSY-LEVER SELECT GEAR FOR COLLAPSIBLE STEERING	1	1	OP 4 SPEED (R DRIVE)			Y	N	34431-E3200
*	3001	34407-73200	INSULATOR-SHIFT ROD	1	10	4 SPEED(R DRIVE)					
	02	34552-89900	INSULATOR-SHIFT ROD	1	10	4 SPEED(R DRIVE)			Y	N	34407-73200
	3101	34410-04100	TRUNNION-SHIFT ROD	1	5	4 SPEED(R DRIVE)					

NOTE:

© 1972 NISSAN MOTOR CO., LTD.

REVISED: DECEMBER, 1972
PRINTED IN JAPAN

TRANSMISSION CONTROL FORK & LEVER (4 SPEED R DRIVE)

S	KEY NO.	PART NO.	DESCRIPTION	QTY	UNIT PKG FOR DIST.	APPLIED MODEL	APPLIED DATE FROM	APPLIED DATE UP TO	ICA N	ICA F	SUPERSEDED
•	3201	34414-04100	WASHER-PLAIN	2	10	4 SPEED(R DRIVE)					
	02	01311-00021	WASHER-PLAIN	2	10	4 SPEED(R DRIVE)			Y	N	34414-04100
	3301	34419-04100	WASHER-SPRING	1	10	4 SPEED(R DRIVE)					
	3401	00921-21810	PIN-COTTER	1	50	4 SPEED(R DRIVE)					
	3501	34409-73200	BOLT	1	10	4 SPEED(R DRIVE)					
	3601	00915-41410	WASHER-PLAIN	1	50	4 SPEED(R DRIVE)					
	3701	00915-11410	WASHER-SPRING	1	50	4 SPEED(R DRIVE)					
	3801	00911-14410	NUT	1	50	4 SPEED(R DRIVE)					
	3901	48340-E0205	ASSY-GROMMET STEERING HOLE	1	1	4 SPEED(R DRIVE)					
	4001	00314-41814	PAN-HEAD	6	50	4 SPEED(R DRIVE)					
	4101	00915-41410	WASHER-PLAIN	6	50	4 SPEED(R DRIVE)					
	4201	34445-E0205	ROD-SHIFT UPPER	1	1	4 SPEED(R DRIVE)		0969			
	02	34445-E0201	ROD-SHIFT UPPER FOR COLLAPSIBLE STEERING	1	1	OP 4 SPEED (R DRIVE)		0969			
	03	34445-E3200	ROD-SHIFT UPPER FOR COLLAPSIBLE STEERING	1	1	OP 4 SPEED (R DRIVE)	1069		Y	N	34445-E5020
	4301	00911-14610	NUT 3/8-24	4	50	4 SPEED(R DRIVE)					
•	4401	34407-73200	INSULATOR-SHIFT	2	10	4 SPEED(R DRIVE)					
	02	34552-89900	INSULATOR-SHIFT	2	10	4 SPEED(R DRIVE)	1069		Y	N	34407-73200
•	4501	34414-04100	WASHER-PLAIN	4	10	4 SPEED(R DRIVE)					
	02	01311-00021	WASHER-PLAIN	4	10	4 SPEED(R DRIVE)			Y	N	34414-04100
	4601	34419-04100	WASHER-SPRING	2	10	4 SPEED(R DRIVE)					
	4701	00921-21810	PIN-COTTER	2	50	4 SPEED(R DRIVE)					
	4801	34415-78100	ROD SELECT UPPER	1	1	4 SPEED(R DRIVE)		0969			

NOTE:

© 1972 NISSAN MOTOR CO., LTD.

PRINTED IN JAPAN

TRANSMISSION CONTROL FORK & LEVER (4 SPEED R DRIVE)

S	KEY NO.	PART NO.	DESCRIPTION	QTY	UNIT PKG FOR DIST.	APPLIED MODEL	APPLIED DATE FROM	APPLIED DATE UP TO	ICA N	ICA F	SUPERSEDED
	4802	34415-E3205	ROD SELECT UPPER	1	1	4 SPEED(R DRIVE)	1069		Y	N	34415-78100
	03	34415-E0201	ROD SELECT UPPER FOR COLLAPSIBLE STERING	1	1	OP 4 SPEED (R DRIVE)		0969			
	04	34415-E3200	ROD SELECT UPPER FOR COLLAPSIBLE STERING	1	1	OP 4 SPEED (R DRIVE)	1069		Y	N	34415-E0201
	4901	34505-E0205	ASSY-CROSS TUBE	1		4 SPEED(R DRIVE)					
	02	34505-E0201	ASSY-CROSS TUBE FOR COLLAPSIBLE	1	1	OP 4 SPEED (R DRIVE)					
	5001	34530-73001	BUSH-CROSS TUBE	1	10	4 SPEED(R DRIVE)					
	5101	34536-73000	COVER-CROSS TUBE 1	1	5	4 SPEED(R DRIVE)					
	5201	34537-73000	COVER-CROSS TUBE 2	1	10	4 SPEED(R DRIVE)					
	5301	34503-78100	ASSY-LEVER CROSS SHAFT INNER	1	1	4 SPEED(R DRIVE)					
	5401	34513-73000	PIN-CROSS SHAFT	1	10	4 SPEED(R DRIVE)					
•	5501	34520-78100	ASSY-BRACKET CROSS SHAFT	1	1	4 SPEED(R DRIVE)					
	02	34520-E3200	ASSY-BRACKET CROSS SHAFT	1	1	4 SPEED(R DRIVE)	1069		Y	Y	34520-78100
	5601	00915-11610	WASHER-SPRING LOCK	2	50	4 SPEED(R DRIVE)					
	5701	00114-62010	BOLT	2	50	4 SPEED(R DRIVE)					
	5801	34462-61000	BUSH-SPHERICAL CROSS SHAFT	1	2	4 SPEED(R DRIVE)					
	5901	34463-61000	SPRING RETAINING	1	5	4 SPEED(R DRIVE)					
	6001	34459-61000	COVER-CROSS SHAFT OUTER	1	5	4 SPEED(R DRIVE)					
	6101	34465-61000	SOCKET-BALL CROSS SHAFT	1	10	4 SPEED(R DRIVE)					
	6201	34458-61000	COVER-CROSS SHAFT INNER	1	5	4 SPEED(R DRIVE)					
	6301	34423-78100	SPRING-RETURN SELECT LEVER	1	10	4 SPEED(R DRIVE)					
	6401	34424-78100	RETAINER SPRING	1	10	4 SPEED(R DRIVE)					

NOTE:

© 1972 NISSAN MOTOR CO., LTD.

REVISED: DECEMBER, 1972
PRINTED IN JAPAN

TRANSMISSION CONTROL FORK & LEVER (4 SPEED R DRIVE)

S	KEY NO.	PART NO.	DESCRIPTION	QTY	UNIT PKG FOR DIST.	APPLIED MODEL	APPLIED DATE FROM	APPLIED DATE UP TO	ICA N	ICA F	SUPERSEDED
	6501	- 34438-78100	ROD-SHIFT LOWER	1	1	4 SPEED(R DRIVE)					
•	6601	- 34407-73200	INSULATOR SHIFT ROD	4	10	4 SPEED(R DRIVE)					
	02	- 34552-89900	INSULATOR SHIFT ROD	4	10	4 SPEED(R DRIVE)			Y	N	34407-73200
•	6701	- 34414-04100	WASHER-PLAIN	8	10	4 SPEED(R DRIVE)					
	02	- 01311-00021	WASHER-PLAIN	8	10	4 SPEED(R DRIVE)			Y	N	34414-04100
	6801	- 34419-04100	WASHER-SPRING	4	10	4 SPEED(R DRIVE)					
	02	- 01311-00021	WASHER-PLAIN	8	10	4 SPEED(L DRIVE)			Y	N	34414-04100
	6901	- 00921-21810	PIN-COTTER	4	50	4 SPEED(R DRIVE)					
	7001	- 34436-78100	ROD-SELECT LOWER	1	1	4 SPEED(R DRIVE)					

NOTE:

© 1972 NISSAN MOTOR CO., LTD.

PRINTED IN JAPAN

NOTE

NISSAN MOTOR CO., LTD.

Printed in Japan

NOTE

Printed in Japan

NISSAN MOTOR CO., LTD.

TRANSMISSION CONTROL FORK & LEVER (4 SPEED L DRIVE)

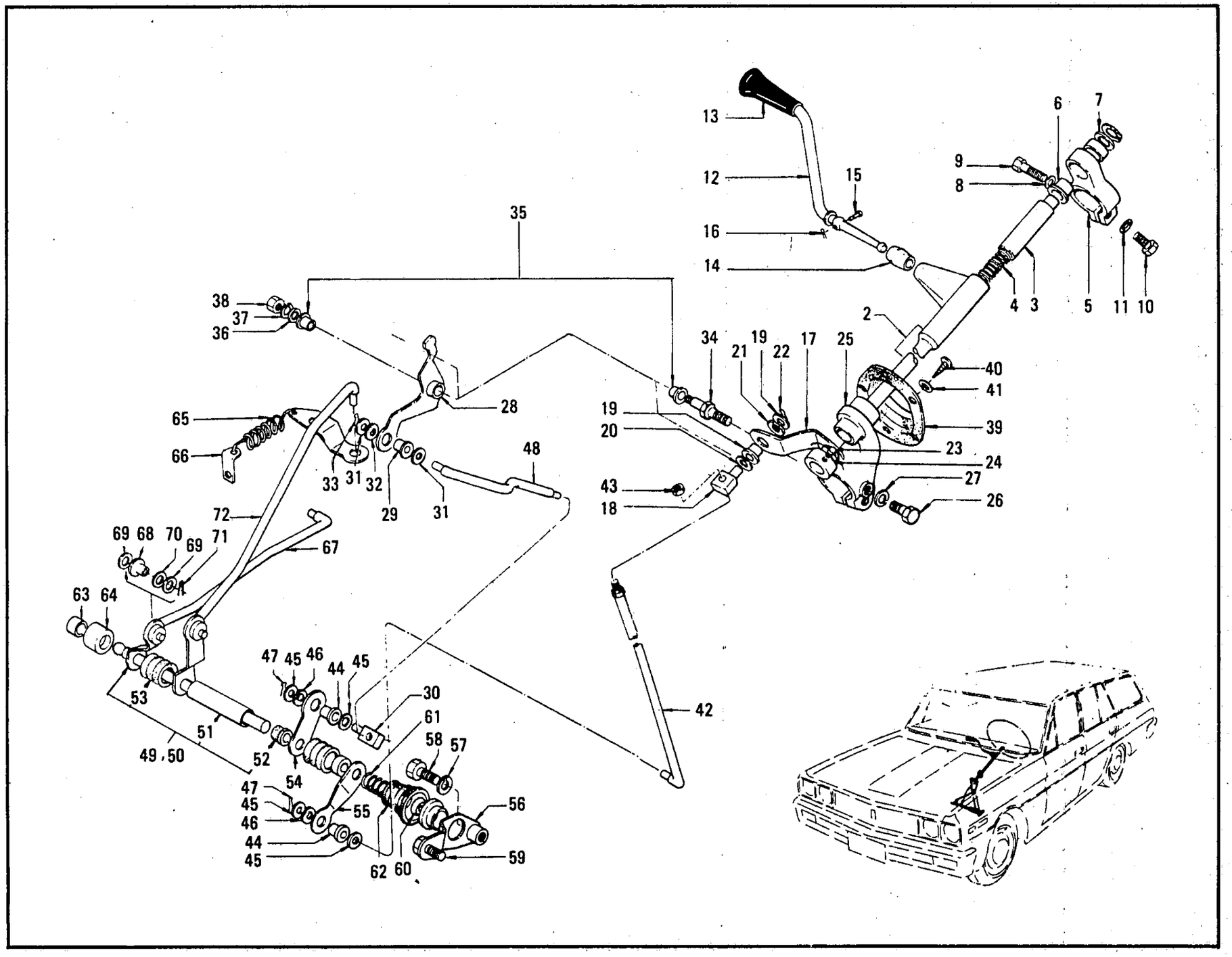

© 1972 NISSAN MOTOR CO., LTD.

REVISED: DECEMBER, 1972

PRINTED IN JAPAN

TRANSMISSION CONTROL FORK & LEVER (4 SPEED L DRIVE)

S	KEY NO.	PART NO.	DESCRIPTION	Q'TY	UNIT PKG FOR DIST.	APPLIED MODEL	APPLIED DATE FROM	APPLIED DATE UP TO	ICA N	ICA F	SUPERSEDED
	101	34102-E1206	ASSY-DEVICE CONTROL	1	1	4 SPEED(L DRIVE)					
	02	34102-E1200	ASSY-DEVICE CONTROL FOR COLLAPSIBLE STEERING	1	1	Op 4 SPEED (L DRIVE)					
	201	34103-E1205	ASSY-ROD CONTROL	1	1	4 SPEED(L DRIVE)					
*	02	34103-E1200	ASSY-ROD CONTROL FOR COLLAPSIBLE STEERING	1	1	Op 4 SPEED (L DRIVE)					
	301	34113-73200	INSERT-CONTROL ROD	1	2	4 SPEED(L DRIVE)					
	401	34116-09400	SPRING-RETURN	1	5	4 SPEED(L DRIVE)					
	501	34104-73000	BRACKET-SUPPORT UPPER	1	1	4 SPEED(L DRIVE)					
	601	34105-73000	BUSH-BRACKET SUPPORT UPPER	1	10	4 SPEED(L DRIVE)					
	701	34135-73000	WASHER-INSERT CONTROL	1	10	4 SPEED(L DRIVE)					
	801	34134-04100	WASHER	1	10	4 SPEED(L DRIVE)					
	901	34128-30100	SCREW-SOCKET	1	10	4 SPEED(L DRIVE)					
	1001	34129-73001	BOLT-LOCATING BRACKET UPPER	1	10	4 SPEED(L DRIVE)					
	1101	00916-11510	WASHER-INTERNAL TOOTH	1	50	4 SPEED(L DRIVE)					
*	1201	34110-E0201	ASSY-HAND LEVER	1	1	4 SPEED(L DRIVE)					
	02	34110-E0202	ASSY-HAND LEVER	1	1	4 SPEED(L DRIVE)			Y	Y	34110-E0201
*	1301	34119-E2300	KNOB-HAND LEVER	1	5	4 SPEED(L DRIVE)					
	02	34119-E3200	KNOB-HAND LEVER	1	5	4 SPEED(L DRIVE)			Y	N	34119-E2300
	1401	34115-73200	INSULATOR-CONTROL LEVER	1	10	4 SPEED(L DRIVE)					
	1501	34124-73200	PIN-PIVOT HAND LEVER	1	10	4 SPEED(L DRIVE)					
	1601	34125-36700	RING-SNAP	1	50	4 SPEED(L DRIVE)					
*	1701	34440-E1405	ASSY-LEVER CHANGE SPEED	1	1	4 SPEED(L DRIVE)					
	02	34440-E1400	ASSY-LEVER CHANGE SPEED	1	1	4 SPEED(L DRIVE)			Y	N	34440-E1405

NOTE:

REVISED: DECEMBER, 1972

© 1972 NISSAN MOTOR CO., LTD.

PRINTED IN JAPAN

TRANSMISSION CONTROL FORK & LEVER (4 SPEED L DRIVE)

S	KEY NO.	PART NO.	DESCRIPTION	Q'TY	UNIT PKG FOR DIST.	APPLIED MODEL	APPLIED DATE FROM	APPLIED DATE UP TO	ICA N	ICA F	SUPERSEDED
	1703	34441-E1200	ASSY-LEVER CHANGE SPEED FOR COLLAPSIBLE STEERING	1	1	Up 4 SPEED (L DRIVE)					
	1801	34410-04100	TRUNNION-SHIFT ROD	1	5	4 SPEED(L DRIVE)					
*	1901	34407-73200	INSULATOR-SHIFT ROD	1	10	4 SPEED(L DRIVE)					
	02	34552-89900	INSULATOR-SHIFT ROD	1	10	4 SPEED(L DRIVE)			Y	N	34407-73200
*	2001	34414-04100	WASHER-PLAIN	1	10	4 SPEED(L DRIVE)					
	02	01311-00021	WASHER-PLAIN	1	10	4 SPEED(L DRIVE)			Y	N	34414-04100
	2101	34419-04100	WASHER-SPRING	1	10	4 SPEED(L DRIVE)					
	2201	00921-21810	PIN-COTTER	1	50	4 SPEED(L DRIVE)					
	2301	34434-30000	SCREW-LOCKING	1	10	4 SPEED(L DRIVE)					
	2401	34473-30000	WIRE-LOCKING SCREW	1	10	4 SPEED(L DRIVE)					
	2501	34400-E1200	ASSY-BRACKET LOWER	1	1	Up 4 SPEED (L DRIVE)					
	02	34400-77900	ASSY-BRACKET LOWER	1	1	4 SPEED (L DRIVE)					
	2601	34129-73001	BOLT	1	10	4 SPEED(L DRIVE)					
	2701	00916-11510	WASHER	1	50	4 SPEED(L DRIVE)					
	2801	34431-E1200	ASSY-LEVER SELECT GEAR	1	1	4 SPEED(L DRIVE)					
*	2901	34407-73200	INSULATOR-SHIFT ROD	1	10	4 SPEED(L DRIVE)					
	02	34552-89900	INSULATOR-SHIFT ROD	1	10	4 SPEED(L DRIVE)			Y	N	34407-73200
	3001	34410-04100	TRUNNION SHIFT ROD	1	5	4 SPEED(L DRIVE)					
*	3101	34414-04100	WASHER-PLAIN	2	10	4 SPEED(L DRIVE)					
	02	01311-00021	WASHER-PLAIN	2	10	4 SPEED(L DRIVE)			Y	N	34414-04100
	3201	34419-04100	WASHER-SPRING	1	10	4 SPEED(L DRIVE)					
	3301	00921-21810	PIN-COTTER	1	50	4 SPEED(L DRIVE)					

NOTE:

© 1972 NISSAN MOTOR CO., LTD.

REVISED: DECEMBER, 1972
PRINTED IN JAPAN

TRANSMISSION CONTROL FORK & LEVER (4 SPEED L DRIVE)

S	KEY NO.	PART NO.	DESCRIPTION	Q'TY	UNIT PKG FOR DIST.	APPLIED MODEL	APPLIED DATE FROM	APPLIED DATE UP TO	ICA N	ICA F	SUPERSEDED
	3401	34409-73200	RULT	1	10	4 SPEED(L DRIVE)					
	3501	C4431-78101	RUSH-LEVER	2	10	4 SPEED(L DRIVE)			Y	N	34407-73200
	3601	00915-41410	WASHER-PLAIN	1	50	4 SPEED(L DRIVE)					
	3701	00915-11410	WASHER-SPRING	1	50	4 SPEED(L DRIVE)					
	3801	00911-14410	NUT	1	50	4 SPEED(L DRIVE)					
	3901	48340-E1205	ASSY-GROMMET STEERING HOLE	1	1	4 SPEED(L DRIVE)					
	4001	00314-41814	SCREW-TAPPING	6	50	4 SPEED(L DRIVE)					
	4101	00915-41410	WASHER-PLAIN	6	50	4 SPEED(L DRIVE)					
	4201	34445-E1205	ROD-SHIFT UPPER	1	1	4 SPEED(L DRIVE)					
	02	34445-E1202	ROD-SHIFT FOR COLLAPSIBLE STEERING	1	1	Up 4 SPEED (L DRIVE)					
	4301	00911-14610	NUT 3/8-24	4	50	4 SPEED(L DRIVE)					
*	4401	34407-73200	INSULATOR-SHIFT	2	10	4 SPEED(L DRIVE)					
	02	34552-89900	INSULATOR-SHIFT	2	10	4 SPEED(L DRIVE)			Y	N	34407-73200
*	4501	34414-04100	WASHER-PLAIN	4	10	4 SPEED(L DRIVE)					
	02	01311-00021	WASHER-PLAIN	4	10	4 SPEED(L DRIVE)			Y	N	34414-04100
	4601	34419-04100	WASHER-SPRING	2	10	4 SPEED(L DRIVE)					
	4701	00921-21810	PIN-COTTER	2	50	4 SPEED(L DRIVE)					
	4801	34415-77900	ROD-SELECT UPPER	1	1	4 SPEED(L DRIVE)					
	4901	34500-E1205	ASSY-CROSS SHAFT	1	1	4 SPEED(L DRIVE)					
	02	34500-E1206	ASSY-CROSS SHAFT	1	1	4 SPEED(L DRIVE)			C	N	34500-E1205
	03	34500-E1315	ASSY-CROSS SHAFT	1	1	4 SPEED (L DRIVE)					
	5001	34501-E1206	COMP-CROSS SHAFT	1	1	4 SPEED(L DRIVE)					

NOTE:

© 1972 NISSAN MOTOR CO., LTD.

PRINTED IN JAPAN

TRANSMISSION CONTROL FORK & LEVER (4 SPEED L DRIVE)

S	KEY NO.	PART NO.	DESCRIPTION	Q'TY	UNIT PKG FOR DIST.	APPLIED MODEL	APPLIED DATE FROM	APPLIED DATE UP TO	ICA N	ICA F	SUPERSEDED
	5101	34505-E1205	ASSY-CROSS TUBE	1		4 SPEED(L DRIVE)					
	5201	34530-73001	BUSH-CROSS TUBE	1	10	4 SPEED(L DRIVE)					
	5301	34536-73000	COVER-CROSS TUBE	1	5	4 SPEED(L DRIVE)					
	5401	34503-77900	ASSY-LEVER CROSS SHAFT INNER	1	5	4 SPEED(L DRIVE)					
	5501	34513-73000	PIN-CROSS SHAFT	1	10	4 SPEED(L DRIVE)					
	5601	34520-77900	ASSY-BRACKET CROSS	1	1	4 SPEED(L DRIVE)					
	02	34520-E1206	ASSY-BRACKET CROSS	1	1	4 SPEED(L DRIVE)			C	N	34520-77900
	5701	00915-11610	WASHER-SPRING LOCK	1	50	4 SPEED(L DRIVE)					
	5801	00114-62010	BOLT	1	50	4 SPEED(L DRIVE)					
	5901	00114-63010	BOLT	1	10	4 SPEED(L DRIVE)					
	6001	34462-61000	BUSH-SPHERICAL CROSS SHAFT	1	2	4 SPEED(L DRIVE)					
	6101	34463-61000	SPRING-RETAINING	1	5	4 SPEED(L DRIVE)					
	6201	34459-61000	COVER CROSS SHAFT OUTER	1	5	4 SPEED(L DRIVE)					
	6301	34465-61000	SOCKET-BALL CROSS SHAFT	1	10	4 SPEED(L DRIVE)					
	6401	34458-61000	COVER CROSS SHAFT INNER	1	5	4 SPEED(L DRIVE)					
	6501	34423-78100	SPRING-RETURN SELECT LEVER	1	10	4 SPEED(L DRIVE)					
	6601	34424-78100	RETAINER-SPRING	1	10	4 SPEED(L DRIVE)					
	6701	34438-77900	ROD-SHIFT LOWER	1	1	4 SPEED(L DRIVE)					
	02	34438-E1316	ROD-SHIFT LOWER	1	1	4 SPEED(L DRIVE)			C	N	34500-E1205
	03	34438-E1206	ROD-SHIFT LOWER	1	1	4 SPEED(L DRIVE)					
*	6801	34407-73200	INSULATOR-SHIFT ROD	4	10	4 SPEED(L DRIVE)			Y	N	34407-73200
	02	34552-89900	INSULATOR-SHIFT ROD	4	10	4 SPEED(L DRIVE)					
*	6901	34414-04100	WASHER-PLAIN	8	10	4 SPEED(L DRIVE)					

NOTE:

© 1972 NISSAN MOTOR CO., LTD.

REVISED: DECEMBER, 1972
PRINTED IN JAPAN

TRANSMISSION CONTROL FORK & LEVER (4 SPEED L DRIVE)

S	KEY NO.	PART NO.	DESCRIPTION	Q'TY	UNIT PKG FOR DIST.	APPLIED MODEL	APPLIED DATE FROM	APPLIED DATE UP TO	ICA N	ICA F	SUPERSEDED
	70D1	34419-04100	WASHER-SPRING	4	10	4 SPEED(L DRIVE)					
	71D1	00921-21810	PIN-COTTER	4	50	4 SPEED(L DRIVE)					
	72D1	34436-77900	ROD-SELECT LOWER	1	1	4 SPEED(L DRIVE)					

NOTE:

© 1972 NISSAN MOTOR CO., LTD.

PRINTED IN JAPAN

NOTE

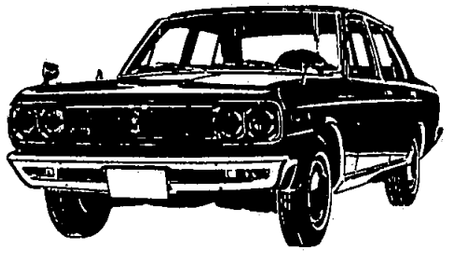

NISSAN MOTOR CO., LTD.

Printed in Japan

NOTE

Printed in Japan

NISSAN MOTOR CO., LTD.

TRANSMISSION CONTROL FORK & LEVER (AUTOMATIC R DRIVE)

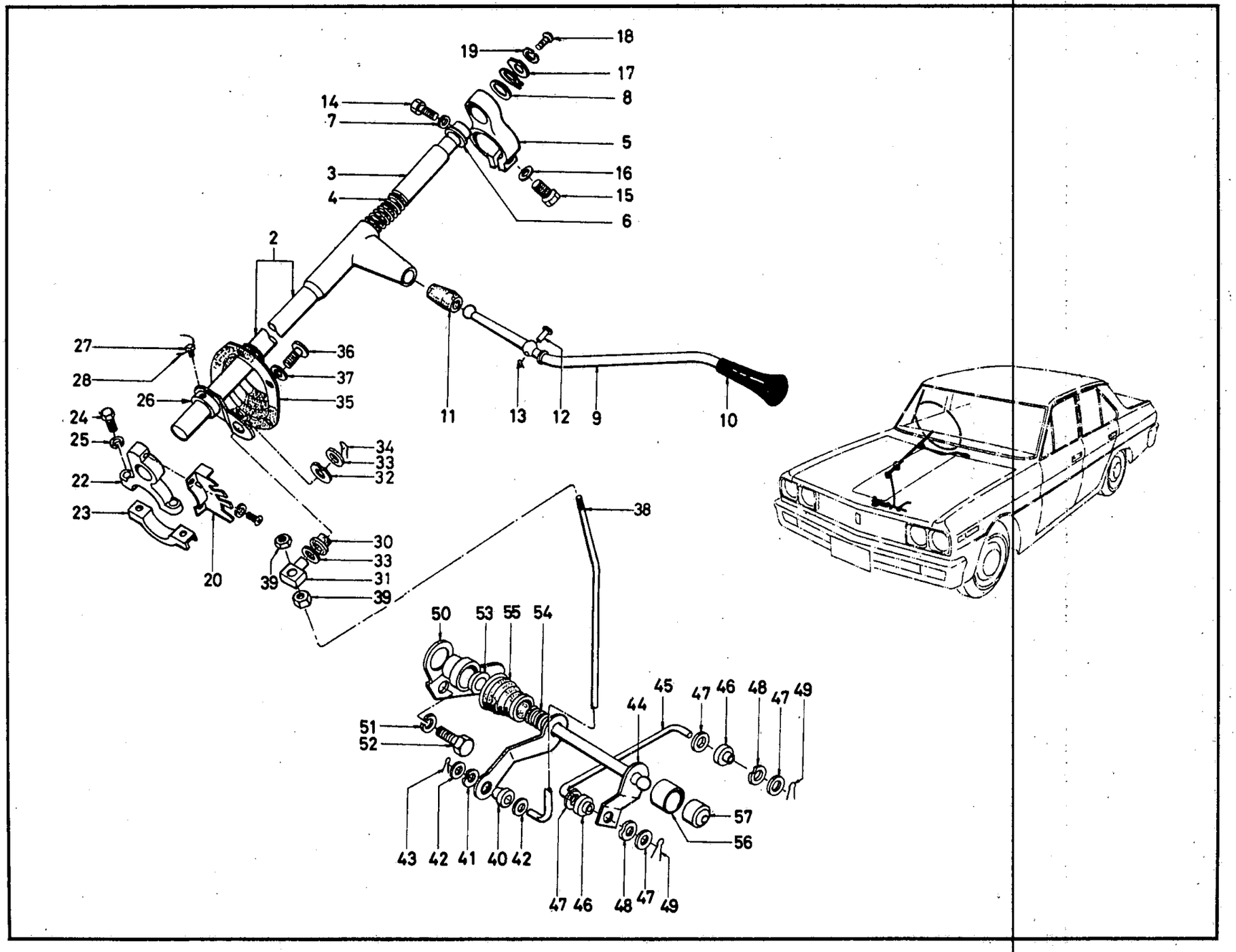

ILLUSTRATION **178**

© 1972 NISSAN MOTOR CO., LTD.

REVISED: DECEMBER, 1972

PRINTED IN JAPAN

C

TRANSMISSION CONTROL FORK & LEVER (AUTOMATIC R DRIVE)

S	KEY NO.	PART NO.	DESCRIPTION	QTY	UNIT PKG FOR DIST.	APPLIED MODEL	APPLIED DATE FROM	APPLIED DATE UP TO	ICA N	ICA F	SUPERSEDED
	101	34102-E0211	ASSY-DEVICE CONTROL	1	1	AUTOMATIC R DRIVE					
	02	34102-E0121	ASSY-DEVICE CONTROL FOR COLLAPSIBLE STEERING	1	1	AUTOMATIC R DRIVE					
	201	34103-E0210	ASSY-ROD CONTROL	1	1	AUTOMATIC R DRIVE					
	301	34113-E0110	INSERT-CONTROL ROD	1	5	AUTOMATIC R DRIVE					
	401	34116-62800	SPRING-RETURN SPRING CONTROL	1	5	AUTOMATIC R DRIVE					
	501	34104-73000	BRACKET-SUPPORT UPPER	1	1	AUTOMATIC R DRIVE					
	601	34105-73000	BUSH-UPPER SUPPORT BRACKET	1	10	AUTOMATIC R DRIVE					
	701	34134-04100	WASHER	1	10	AUTOMATIC R DRIVE					
	801	34135-73000	WASHER-INSERT CONTROL	1	10	AUTOMATIC R DRIVE					
*	901	34110-E0301	ASSY-LEVER HAND	1	1	AUTOMATIC R DRIVE					
	02	34110-E0302	ASSY-LEVER HAND	1	1	AUTOMATIC R DRIVE			Y	Y	34110-E0301
*	1001	34119-E2300	KNOB-HAND LEVER	1	5	AUTOMATIC R DRIVE					
	02	34119-E3200	KNOB-HAND LEVER	1	5	AUTOMATIC R DRIVE			Y	N	34119-E2300
	1101	34115-73200	INSULATOR-CONTROL LEVER	1	10	AUTOMATIC R DRIVE					
	1201	34124-73200	PIN-PIVOT CONTROL	1	10	AUTOMATIC R DRIVE					
	1301	34125-36700	RING-SNAP CONTROL ROD	1	50	AUTOMATIC R DRIVE					
	1401	34128-30100	SCREW	1	10	AUTOMATIC R DRIVE					
	1501	34129-73001	BOLT-LOCATING BRACKET	1	10	AUTOMATIC R DRIVE					
	1601	00916-11510	WASHER INTERNAL TOOTH	1	50	AUTOMATIC R DRIVE					
	1701	34190-73700	ARM-INDICATOR	1	10	AUTOMATIC R DRIVE					
	1801	00310-60610	SCREW-MACHINE	1	50	AUTOMATIC R DRIVE					
	1901	00915-10610	WASHER-LOCK	1	50	AUTOMATIC R DRIVE					

NOTE:

© 1972 NISSAN MOTOR CO., LTD.

PRINTED IN JAPAN

TRANSMISSION CONTROL FORK & LEVER (AUTOMATIC R DRIVE)

S	KEY NO.	PART NO.	DESCRIPTION	QTY	UNIT PKG FOR DIST.	APPLIED MODEL	APPLIED DATE FROM	APPLIED DATE UP TO	ICA N	ICA F	SUPERSEDED
	2001	34406-E0210	PLATE-POSITION SPEED RANGE	1	1	AUTOMATIC R DRIVE					
	02	34406-E0120	PLATE-POSITION SPEED RANGE FOR COLLAPSIBLE STRG	1	1	OP AUTOMATIC (R DRIVE)					
	2101	00369-41214	SCREW WITH WASHER	1		AUTOMATIC R DRIVE					
	2201	34400-73700	COMP-BRACKET LOWER SUPPORT	1	1	AUTOMATIC R DRIVE					
	2301	34405-73000	CLAMP-LOWER BRACKET	1	5	AUTOMATIC R DRIVE					
	2401	00124-42510	BOLT	2	50	AUTOMATIC R DRIVE					
	2501	00915-11410	WASHER-SPRING	1	50	AUTOMATIC R DRIVE					
	2601	34440-E0210	ASSY-LEVER SELECT	1	5	AUTOMATIC R DRIVE					
	02	34440-E0120	ASSY-LEVER SELECT FOR COLLAPSIBLE STEERING	1	1	OP AUTOMATIC (R DRIVE)					
	2701	34434-30000	SCREW-LOCKING	1	10	AUTOMATIC R DRIVE					
	2801	34473-30000	WIRE-LOCKING SCREW	1	10	AUTOMATIC R DRIVE					
	2901	00922-11600	RING-SNAP	1	50	AUTOMATIC R DRIVE					
	3001	34481-73700	INSULATOR	1	10	AUTOMATIC R DRIVE					
	3101	34482-73700	TRUNNION-JOINT	1	5	AUTOMATIC R DRIVE					
	3201	34483-73700	WASHER-SPRING	1	10	AUTOMATIC R DRIVE					
	3301	34483-73700	WASHER-PLAIN	2	10	AUTOMATIC R DRIVE					
	3401	00921-11810	PIN-COTTER	1	50	AUTOMATIC R DRIVE					
	3501	48340-E0205	ASSY-GROMMET STEERING HOLE	1	1	AUTOMATIC R DRIVE					
	3601	00314-41814	SCREW	6	50	AUTOMATIC R DRIVE					
	3701	00915-41410	WASHER-PLAIN	6	50	AUTOMATIC R DRIVE					
	3801	34450-E0210	ROD-SELECT UPPER	1	5	AUTOMATIC R DRIVE					
	02	34450-E0120	ROD-SELECT UPPER FOR COLLAPSIBLE STEERING	1	5	OP AUTOMATIC (R DRIVE)					

NOTE:

© 1972 NISSAN MOTOR CO., LTD.

PRINTED IN JAPAN

TRANSMISSION CONTROL FORK & LEVER (AUTOMATIC R DRIVE)

S	KEY NO.	PART NO.	DESCRIPTION	QTY	UNIT PKG FOR DIST.	APPLIED MODEL	APPLIED DATE FROM	APPLIED DATE UP TO	ICA N	ICA F	SUPERSEDED
	3901	- 00911-14510	NUT	2	50	AUTOMATIC R DRIVE					
	4001	- 34481-73700	INSULATOR	3	10	AUTOMATIC R DRIVE					
	4101	- 34483-73700	WASHER-SPRING	3	10	AUTOMATIC R DRIVE					
	4201	- 34484-73700	WASHER-PLAIN	6	10	AUTOMATIC R DRIVE					
	4301	- 00921-11810	PIN-COTTER	3	50	AUTOMATIC R DRIVE					
	4401	- 34501-E0110	ASSY CROSS SHAFT	1	1	AUTOMATIC R DRIVE					
	4501	- 34451-E0110	ROD-SELECT LOWER	1	5	AUTOMATIC R DRIVE					
	4601	- 34481-73700	INSULATOR	3	10	AUTOMATIC R DRIVE					
	4701	- 34484-73700	WASHER-PLAIN	4	10	AUTOMATIC R DRIVE					
	4801	- 34483-73700	WASHER-SPRING	2	10	AUTOMATIC R DRIVE					
	4901	- 00921-21810	PIN-COTTER	2	50	AUTOMATIC R DRIVE					
	5001	- 34520-77500	ASSY-BRACKET CROSS SHAFT	1	1	AUTOMATIC R DRIVE					
	5101	- 00915-11610	WASHER-SPRING LOCK	2	50	AUTOMATIC R DRIVE					
	5201	- 00114-62010	BOLT	2	50	AUTOMATIC R DRIVE					
	5301	- 34462-61000	BUSH-SPHERICAL CROSS SHAFT	1	2	AUTOMATIC R DRIVE					
	5401	- 34463-61000	SPRING-RETAINING	1	5	AUTOMATIC R DRIVE					
	5501	- 34458-61000	COVER-CROSS SHAFT	1	5	AUTOMATIC R DRIVE					
*	5601	- 34467-10600	COVER-CROSS SHAFT OUTER	1	10	AUTOMATIC R DRIVE					
	02	- 34467-84700	COVER-CROSS SHAFT OUTER	1	5	AUTOMATIC R DRIVE			Y	Y	34467-10600
	5701	- 34465-61000	SOCKET-BALL CROSS SHAFT	1	10	AUTOMATIC R DRIVE					

NOTE:

© 1972 NISSAN MOTOR CO., LTD.

PRINTED IN JAPAN

NOTE

NISSAN MOTOR CO., LTD.

Printed in Japan

NOTE

Printed in Japan

NISSAN MOTOR CO., LTD.

TRANSMISSION CONTROL FORK & LEVER (AUTOMATIC L DRIVE)

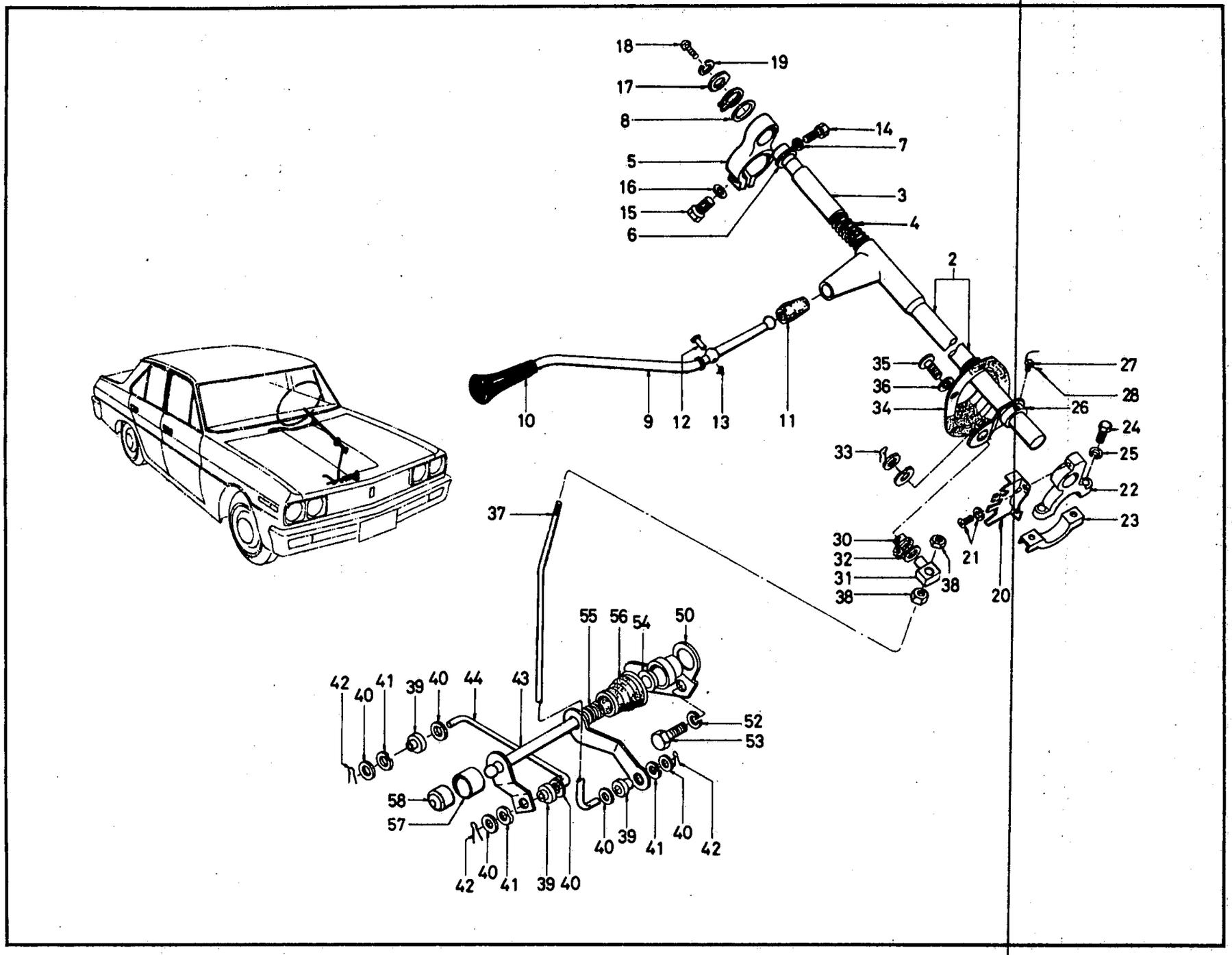

ILLUSTRATION **178A**

© 1972 NISSAN MOTOR CO., LTD.

REVISED: DECEMBER, 1972

PRINTED IN JAPAN

C

TRANSMISSION CONTROL FORK & LEVER (AUTOMATIC L DRIVE)

S	KEY NO.	PART NO.	DESCRIPTION	QTY	UNIT PKG FOR DIST.	APPLIED MODEL	APPLIED DATE FROM	APPLIED DATE UP TO	ICA N	ICA F	SUPERSEDED
	101	34102-E1211	ASSY-DEVICE CONTROL	1		AUTOMATIC L DRIVE					
	02	34102-E1221	ASSY-DEVICE CONTROL FOR COLLAPSIBLE STRG	1		OP AUTOMATIC L DRIVE					
	201	34103-E1210	ASSY-ROD CONTROL	1	1	AUTOMATIC L DRIVE					
	02	34103-E1220	ASSY-ROD CONTROL FOR COLLAPSIBLE STEERING	1		OP AUTOMATIC L DRIVE					
	301	34113-E0110	INSERT-CONTROL ROD	1	5	AUTOMATIC L DRIVE					
	401	34116-62800	SPRING-RETURN SPEED CONTROL	1	5	AUTOMATIC L DRIVE					
	501	34104-73000	BRCKET-SUPPORT UPPER	1	1	AUTOMATIC L DRIVE					
	601	34105-73000	BOSH-UPPER SUPPORT BRCKET	1	10	AUTOMATIC L DRIVE					
	701	34134-04100	WASHER	1	10	AUTOMATIC L DRIVE					
	801	34135-73000	WASHER-INSERT CONTROL ROD	1	10	AUTOMATIC L DRIVE					
*	901	34110-E0301	ASSY-LEVER HAND	1	1	AUTOMATIC L DRIVE					
	02	34110-E0302	ASSY-LEVER HAND	1	1	AUTOMATIC L DRIVE			Y	N	34110-E0301
*	1001	34119-E2300	KNOB-HAND LEVER	1	5	AUTOMATIC L DRIVE					
	02	34119-E3200	KNOB-HAND LEVER	1	5	AUTOMATIC L DRIVE			Y	N	34119-E2300
	1101	34115-73200	INSULATOR-CONTROL LEVER	1	10	AUTOMATIC L DRIVE					
	1201	34124-73200	PIN-PIVOT CONTROL LEVER	1	10	AUTOMATIC L DRIVE					
	1301	34125-36700	SNAP-RING CONTROL ROD	1	50	AUTOMATIC L DRIVE					
	1401	34128-30100	SCREW	1	10	AUTOMATIC L DRIVE					
	1501	34129-73001	BOLT-LOCATING BRCKET	1	10	AUTOMATIC L DRIVE					
	1601	00916-11510	WASHER-INTERNAL TOOTH	1	50	AUTOMATIC L DRIVE					
	1701	34190-73700	ARM-INDICATOR	1	10	AUTOMATIC L DRIVE					
	1801	00310-60610	SCREW-MACHINE	1	50	AUTOMATIC L DRIVE					

NOTE:

© 1972 NISSAN MOTOR CO., LTD.

PRINTED IN JAPAN

TRANSMISSION CONTROL FORK & LEVER (AUTOMATIC L DRIVE)

S	KEY NO.	PART NO.	DESCRIPTION	Q'TY	UNIT PKG FOR DIST.	APPLIED MODEL	APPLIED DATE FROM	APPLIED DATE UP TO	ICA N	ICA F	SUPERSEDED
	1901	00915-10610	WASHER-LOCK	1	50	AUTOMATIC L DRIVE					
	2001	34406-E1210	PLATE-POSITION SPEED RANGE	1	1	AUTOMATIC L DRIVE					
	02	34406-E1220	PLATE-POSITION SPEED RANGE COLLAPSIBLE STRG	1		OP AUTOMATIC L DRIVE					
	2101	34406-E1210	SCREW WITH SPRING WASHER	2	1	AUTOMATIC L DRIVE					
	2201	34400-73700	COMP-BRCKET LOWER SUPPORT	1	1	AUTOMATIC L DRIVE					
	2301	34405-73000	CLAMP-LOWER BRACKET	1	5	AUTOMATIC L DRIVE					
	2401	00124-42510	BOLT	2	50	AUTOMATIC L DRIVE					
	2501	00915-11410	WASHER-SPRING	2	50	AUTOMATIC L DRIVE					
	2601	34440-E1210	ASSY-LEVER SELECT	1	1	AUTOMATIC L DRIVE					
	02	34440-E1220	ASSY-LEVER SELECT FOR COLLAPSIBLE STEERING	1		OP AUTOMATIC L DRIVE					
	2701	34434-30000	SCREW-LOCKING	1	10	AUTOMATIC L DRIVE					
	2801	34473-30000	WIRE-LOCKING SCREW	1	10	AUTOMATIC L DRIVE					
	2901	00922-11600	RING-SNAP	1	50	AUTOMATIC L DRIVE					
	3001	34481-73700	INSULATOR	1	10	AUTOMATIC L DRIVE					
	3101	34482-73700	TRUNNION-JOINT	1	5	AUTOMATIC L DRIVE					
	3201	34483-73700	WASHER-PLAIN	2	10	AUTOMATIC L DRIVE					
	3301	00921-11810	PIN-COTTER	1	50	AUTOMATIC L DRIVE					
	3401	48340-E1205	ASSY-GROMMET STEERING HOLE	1	1	AUTOMATIC L DRIVE					
	3501	00314-41810	SCREW	6	50	AUTOMATIC L DRIVE					
	3601	00915-41410	WASHER-PLAIN	6	50	AUTOMATIC L DRIVE					
	3701	34450-E1210	ROD-SELECT	1	5	AUTOMATIC L DRIVE					
	3801	00911-14510	NUT	2	50	AUTOMATIC L DRIVE					

NOTE:

© 1972 NISSAN MOTOR CO., LTD.

REVISED: DECEMBER, 1972

PRINTED IN JAPAN

TRANSMISSION CONTROL FORK & LEVER (AUTOMATIC L DRIVE)

S	KEY NO.	PART NO.	DESCRIPTION	QTY	UNIT PKG FOR DIST.	APPLIED MODEL	APPLIED DATE FROM	APPLIED DATE UP TO	ICA N	ICA F	SUPERSEDED
	3901	34481-73700	INSULATOR-SHIFT	3	10	AUTOMATIC L DRIVE					
	4001	34484-73700	WASHER-PLAIN	6	10	AUTOMATIC L DRIVE					
	4101	34483-73700	WASHER-SPRING	2	10	AUTOMATIC L DRIVE					
	4201	00921-21810	PIN-COTTER	3	50	AUTOMATIC L DRIVE					
	4301	34501-E1210	ASSY-CROSS SHAFT	1	1	AUTOMATIC L DRIVE					
	4401	34451-E1210	ROD-SELECT MIDDLE	1	5	AUTOMATIC L DRIVE					
	4501	34507-E1210	LEVER-CROSS OVER SHAFT	1	1	AUTOMATIC L DRIVE					
	4601	34508-77600	BOLT	1	10	AUTOMATIC L DRIVE					
	4701	00915-41510	WASHER-PLAIN	2	50	AUTOMATIC L DRIVE					
	4801	00915-11510	WASHER-SPRING	1	50	AUTOMATIC L DRIVE					
	4901	00911-14510	NUT	1	50	AUTOMATIC L DRIVE					
	5001	34520-E3200	ASSY-BRCKET CROSS SHAFT	1	1	AUTOMATIC L DRIVE					
	5101	34461-61000	SUPPORT-CROSS SHAFT	1	1	AUTOMATIC L DRIVE					
	5201	00915-11610	WASHER-SPRING LOCK	2	50	AUTOMATIC L DRIVE					
	5301	00114-62010	BOLT	2	50	AUTOMATIC L DRIVE					
	5401	34462-61000	BUSH-SPHERICAL CROSS	1	2	AUTOMATIC L DRIVE					
	5501	34463-61000	SPRING-RETAINING	1	5	AUTOMATIC L DRIVE					
	5601	34458-61000	COVER-CROSS SHAFT	1	5	AUTOMATIC L DRIVE					
•	5701	34467-10600	COVER-CROSS SHAFT OUTER	1	10	AUTOMATIC L DRIVE					
	02	34467-84700	COVER-CROSS SHAFT OUTER	1	5	AUTOMATIC L DRIVE			Y	Y	34467-10600
	5801	34465-61000	SOCKET-BALL CROSS SHAFT	1	10	AUTOMATIC L DRIVE					

NOTE:

© 1972 NISSAN MOTOR CO., LTD.

PRINTED IN JAPAN

Nissan Parts & Accessories,

Coast-to-Coast, Border-to Border.

NISSAN

NOTE

Printed in Japan

NISSAN MOTOR CO., LTD.

PROPELLER SHAFT (L24, L23)

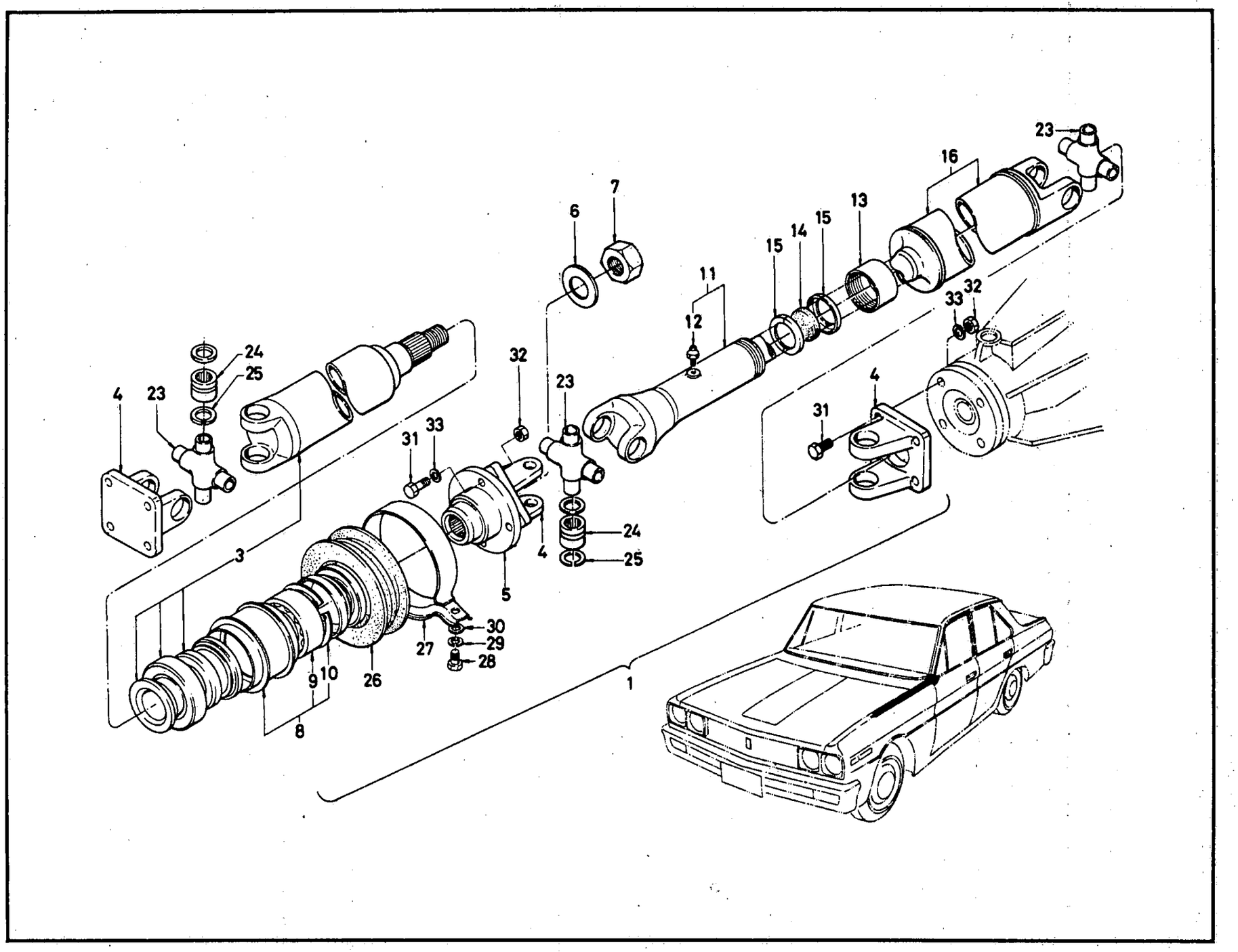

© 1972 NISSAN MOTOR CO., LTD.

REVISED: DECEMBER, 1972

PRINTED IN JAPAN

PROPELLER SHAFT [L20(A), H20 & SD22]

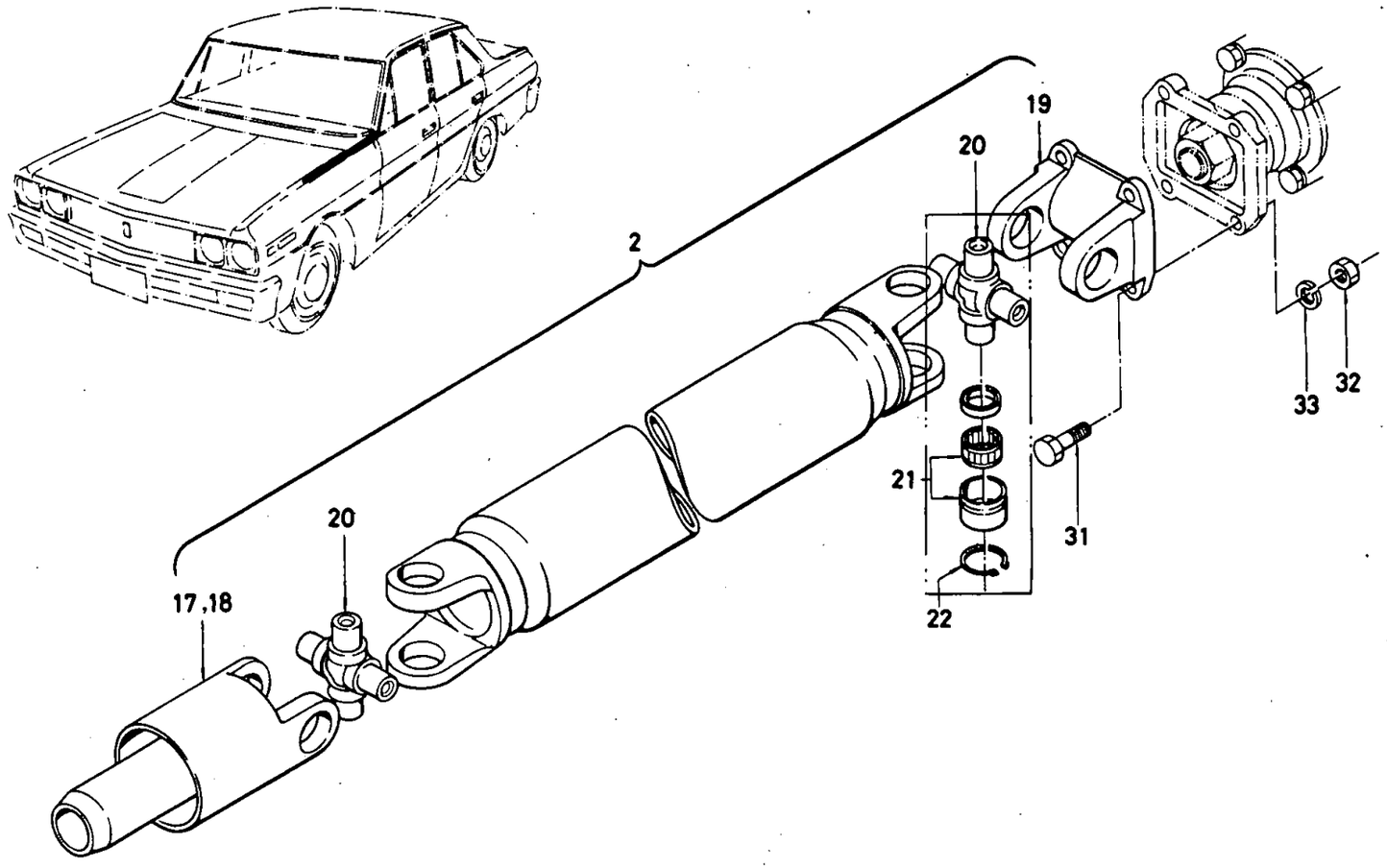

© 1972 NISSAN MOTOR CO., LTD.

PRINTED IN JAPAN

PROPELLER SHAFT

S	KEY NO.	PART NO.	DESCRIPTION	Q'TY	UNIT PKG FOR DIST.	APPLIED MODEL	APPLIED DATE FROM	APPLIED DATE UP TO	ICA N	ICA F	SUPERSEDED
	101	37000-69800	COMP-SHAFT PROPELLER WITH JOINT	1	1	L23 MANUAL					
	02	37000-E3100	COMP-SHAFT PROPELLER WITH JOINT	1	1	L24					
*	201	37000-73000	COMP-SHAFT PROPELLER WITH JOINT	1	1	J20 MANUAL		0969			
	02	37000-E3200	COMP-SHAFT PROPELLER WITH JOINT	1	1	L20A			N	Y	70007-30000
*	03	37000-73000	COMP-SHAFT PROPELLER WITH JOINT	1	1	L20A	1069				
	04	37000-E3200	COMP-SHAFT PROPELLER WITH JOINT	1	1	J20 MANUAL		0969			37000-73000
	05	37000-73700	COMP-SHAFT PROPELLER WITH JOINT	1	1	AUTOMATIC		0969			
	06	37000-73500	COMP-SHAFT PROPELLER WITH JOINT	1	1	STD					
*	301	37210-69800	ASSY-TUBE PROPELLER SHAFT FRONT	1		L23					
*	401	37117-14600	YOKE-FLANGE	3	1	L23 L24					
	02	37117-14601	YOKE-FLANGE	3	1	L24 L23			Y	N	37117-14600
	501	37110-69800	FLANGE-COMPANION	1	1	L23 L24					
	601	38215-61000	WASHER-PLAIN	1	10	L23 L24					
*	701	32144-20400	NUT-SELF LOCKING	1		L23 L24					
	02	32144-20401	NUT-SELF LOCKING	1	10	L23 L24			Y	N	32144-20400
	801	37521-69800	COMP-CENTER BEARING	1	10	L23 L24					
	901	37516-69800	BEARING-CENTER PROPELLER SHAFT	1	1	L23 L24					
	1001	00922-26200	RING-SNAP	1	10	L23 L24					

NOTE:

© 1972 NISSAN MOTOR CO., LTD.

REVISED: DECEMBER, 1972
PRINTED IN JAPAN

S	KEY NO.	PART NO.	DESCRIPTION	Q'TY	UNIT PKG FOR DIST.	APPLIED MODEL	APPLIED DATE FROM	APPLIED DATE UP TO	ICA N	ICA F	SUPERSEDED
	1101	37111-69800	ASSY-YOKE SLEEVE	1	1	L23 L24					
	1201	37138-69800	NIPPLE-GREASE	1	10	L23 L24					
	1301	37223-69800	RETAINER-SEAL OIL	1	10	L23 L24					
*	1401	37220-69800	SEAL-OIL STABILIZER SHAFT (FELT)	1	1	L23 L24					
	1501	37224-69800	WASHER-RETAINER OIL SEAL	4	10	L23 L24					
*	1601	37330-69800	ASSY-TUBE PROPELLER SHAFT REAR	1		L23 L24					
	1701	37111-14600	ASSY-YOKE SLEEVE	1	1	J20 L20A					
	02	37111-73700	ASSY-YOKE SLEEVE	1	1	ALL EXC STD AUTO		0969			
	03	37111-73700	ASSY-YOKE SLEEVE	1	1	ALL EXC STD	1069				
*	1801	37210-73000	ASSY-TUBE PROPELLER SHAFT	1	1	ALL EXC STD AUTO		0969			
	02	37210-73700	ASSY-TUBE PROPELLER SHAFT	1	1	ALL EXC STD AUTO		0969	Y	N	37210-73000
*	03	37210-73000	ASSY-TUBE PROPELLER SHAFT	1	1	ALL EXC STD	1069				
*	04	37210-73000	ASSY-TUBE PROPELLER SHAFT	1	1	ALL EXC STD	1069		Y	N	37210-73000
	05	37210-73500	ASSY-TUBE PROPELLER SHAFT	1	1	STD					
*	1901	37117-14600	YOKE-FLANGE	1	1	ALL					
	02	37117-14601	YOKE-FLANGE	1	1	ALL			Y	N	37117-14600
*	2001	37125-14625	ASSY-JOURNAL WITH BEARING	2	10	ALL			Y	Y	37125-14600
	02	37125-14627	ASSY-JOURNAL WITH BEARING	2	10	ALL			Y	N	37125-14625
*	2101	37130-14600	ASSY-BEARING RACE	8	2	ALL					
*	02	37125-14600	ASSY-BEARING RACE	8	1	ALL			Y	N	37130-14600
*	2201	37146-14600	RING-SNAP ADJUSTING T=2.00	8	50	ALL					
	02	37147-14600	RING-SNAP ADJUSTING T=2.02	8	50	ALL					

NOTE:

© 1972 NISSAN MOTOR CO., LTD.

PRINTED IN JAPAN

PROPELLER SHAFT

S	KEY NO.	PART NO.	DESCRIPTION	QTY	UNIT PKG FOR DIST.	APPLIED MODEL	APPLIED DATE FROM	APPLIED DATE UP TO	ICA N	ICA F	SUPERSEDED
	2203	37148-14600	RING-SNAP ADJUSTING T=2.06	8	50	ALL					
	04	37149-14600	RING-SNAP ADJUSTING T=2.06	8	50	ALL					
•	2301	37125-14625	ASSY-JOURNAL WITH BEARING	2	10	L23 L24			Y	Y	37125-14600
	02	37125-14627	ASSY-JOURNAL WITH BEARING	2	10	L23 L24			Y	N	37125-14625
•	2401	37130-14600	ASSY-BEARING RACE	12	2	L23 L24					
•	02	37125-14600	ASSY-BEARING RACE	12	1	L23 L24			Y	N	37130-14600
•	2501	37146-14600	RING-SNAP ADJUSTING T=2.00	12	50	L23 L24					
	02	37147-14600	RING-SNAP ADJUSTING T=2.02	12	50	L23 L24					
	03	37148-14600	RING-SNAP ADJUSTING T=2.04	12	50	L23 L24					
	04	37149-14600	RING-SNAP ADJUSTING T=2.06	12	50	L23 L24					
	2601	37520-61800	INSULATOR-CENTER BEARING	1	5	L23 L24					
	2701	37510-61800	BRACKET-CENTER BEARING	1	1	L23 L24					
	2801	00124-62210	BOLT	2	50	L23 L24					
	2901	00915-11610	WASHER-SPRING	2	50	L23 L24					
	3001	00915-41610	WASHER-PLAIN	2	50	L23 L24					
	3101	00124-52510	BOLT-DIFFERENTIAL SIDE	4	50	ALL					
	3201	00911-24510	NUT-DIFFERENTIAL SIDE	4	50	ALL					
	3301	00915-21510	WASHER-LOCK DIFFERENTIAL SIDE	4	50	ALL					
	3401	00124-52510	BOLT-TRANSMISSION SIDE	4	50	L23 L24					
	3501	00911-24510	NUT-TRANSMISSION SIDE	4	50	L23 L24					
	3601	00915-21510	WASHER-LOCK TRANSMISSION SIDE	4	50	L23 L24					

NOTE:

© 1972 NISSAN MOTOR CO., LTD.

REVISED: DECEMBER, 1972

PRINTED IN JAPAN

NOTE

Printed in Japan

NISSAN MOTOR CO., LTD.

DIFFERENTIAL GEAR PINION & CASE

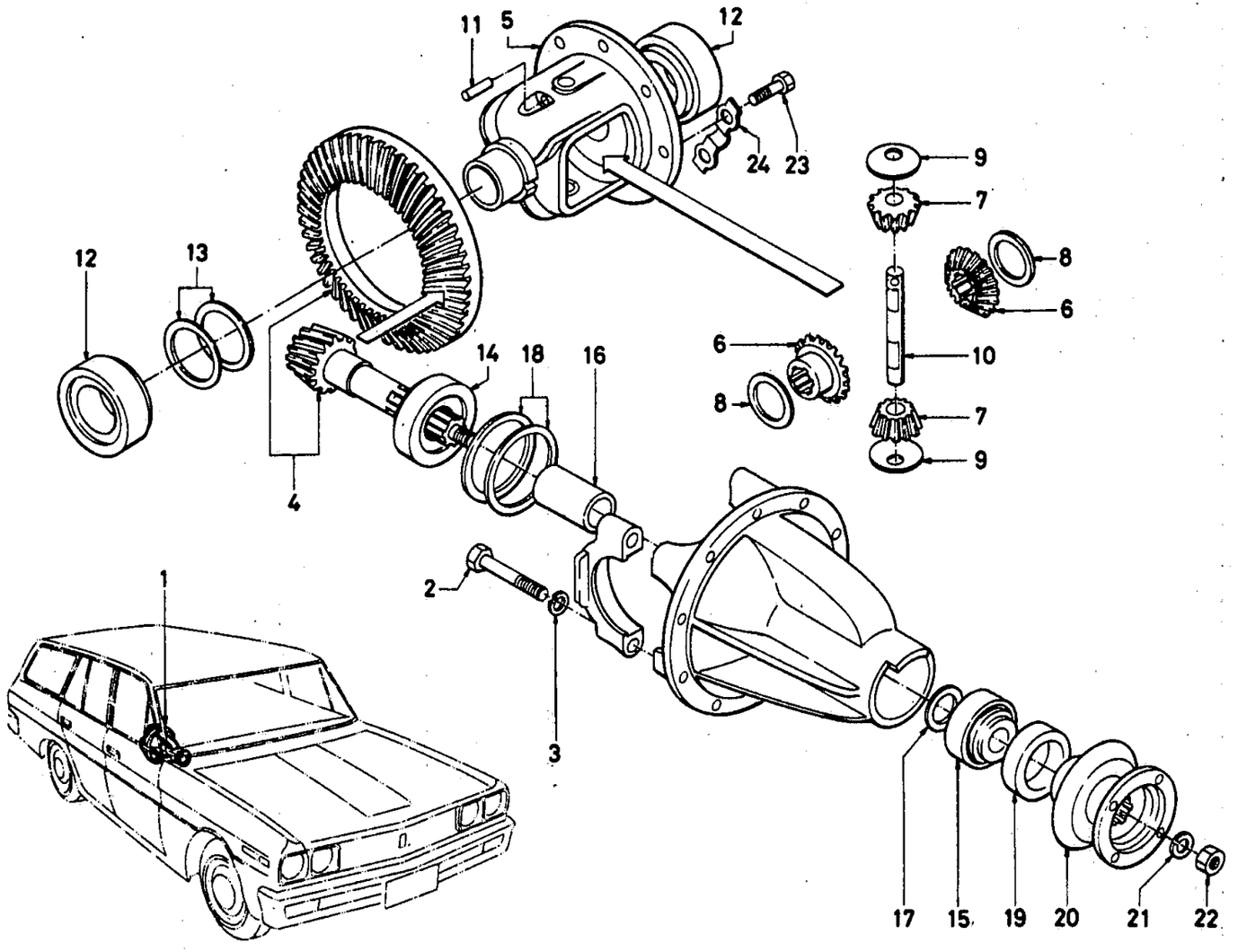

ILLUSTRATION **180**

© 1972 NISSAN MOTOR CO., LTD.

REVISED: DECEMBER, 1972

PRINTED IN JAPAN

DIFFERENTIAL GEAR, PINION & CASE

S	KEY NO.	PART NO.	DESCRIPTION	QTY	UNIT PKG FOR DIST.	APPLIED MODEL	APPLIED DATE FROM	APPLIED DATE UP TO	ICA N	ICA F	SUPERSEDED
*	101	38300-73001	ASSY-CARRIER WITH GEAR RATIO 35:8	1	1	H20 SD22 RD L23 RD		0969	Y	Y	38300-73000
*	02	38300-P0201	ASSY-CARRIER WITH GEAR RATIO 35:8	1		H20 SD22 RD L23 RD			Y	N	38300-73001
*	03	38300-75000	ASSY-CARRIER WITH GEAR FINAL GEAR RATIO 37:9	1	1	LD EXC VAN OP J20 H20 RD EXC VAN		0969			
	04	38300-P0300	ASSY-CARRIER WITH GEAR FINAL GEAR RATIO 37:9	1	1	LD EXC VAN OP J20 H20 RD EXC VAN			Y	N	38300-75000
	05	38300-E1010	ASSY-CARRIER WITH GEAR FINAL GEAR RATIO 37.9	1	1	LD EXC VAN OP J20 H20 RD EXC VAN			Y	Y	38300-75000
*	06	38300-75000	ASSY-CARRIER WITH GEAR FINAL GEAR RATIO 37:9	1	1	ALL EXC VAN-DX	1069				
	07	38300-P0300	ASSY-CARRIER WITH GEAR FINAL GEAR RATIO 37:9	1	1	ALL EXC VAN-DX			Y	N	38300-75000
	08	38300-E1010	ASSY-CARRIER WITH GEAR FINAL GEAR RATIO 37.9	1	1	ALL EXC VAN-DX	1069		Y	Y	38300-75000
*	09	38300-73200	ASSY-CARRIER WITH GEAR FINAL GEAR RATIO 37:8	1	1	VAN MANUAL RD		0969			
	10	38300-P0100	ASSY-CARRIER WITH GEAR FINAL GEAR RATIO 37:8	1	1	VAN MANUAL RD			Y	N	38300-73200
*	11	38300-75400	ASSY-CARRIER WITH GEAR FINAL GEAR RATIO 35:9	1	1	OP MANUAL L DRIVE EXC VAN					
	12	38300-P0500	ASSY-CARRIER WITH GEAR FINAL GEAR RATIO 35:9	1	1	OP MANUAL L DRIVE EXC VAN			Y	N	38300-75400
*	13	38300-75400	ASSY-CARRIER W/GEAR RATIO 35:9 FOR H/SPEED AREA	1	1	OP MANUAL L DRIVE EXC VAN-DX					
	14	38300-P0500	ASSY-CARRIER W/GEAR RATIO 35:9 FOR H/SPEED AREA	1	1	OP MANUAL L DRIVE EXC VAN-DX			Y	N	38300-75400
	201	38315-01304	BOLT	4	10	ALL					
*	301	08915-14000	WASHER-LOCK	4	50	ALL					

NOTE:

© 1972 NISSAN MOTOR CO., LTD.

PRINTED IN JAPAN

DIFFERENTIAL GEAR, PINION & CASE

S	KEY NO.	PART NO.	DESCRIPTION	Q'TY	UNIT PKG FOR DIST.	APPLIED MODEL	APPLIED DATE FROM	APPLIED DATE UP TO	ICA N	ICA F	SUPERSEDED
	302	08915-14010	WASHER-LOCK.	4	50	ALL			Y	N	08915-14000
	401	38100-26000	SET-GEAR HYPOID & PINION GEAR RATIO 35:8	1	1	VAN LD J20 RD EXC VAN OP H20 J20 LD		0969	Y	Y	38100-37800
	02	38100-26000	SET-GEAR HYPOID & PINION GEAR RATIO 35:8	1	1	OP L20A MANUAL EXC VAN H20 SD22 DX	1069				
	03	38100-25900	SET-GEAR HYPOID & PINION GEAR RATIO 37:9	1	1	L DRIVE L23 AUTO RD EXC VAN		0969	Y	Y	38100-61001
	04	38100-25900	SET-GEAR HYPOID & PINION GEAR RATIO 37:9	1	1	ALL EXC VAN-DX	1069				
•	05	38100-36800	SET-GEAR HYPOID & PINION GEAR RATIO 37:8	1	1	VAN RD					
	06	38100-77500	SET-GEAR HYPOID & PINION GEAR RATIO 37:8	1		VAN R DRIVE			Y	Y	38100-36800
•	07	38100-25600	SET-GEAR HYPOID & PINION GEAR RATIO 35:9	1	1	OP DIESEL L DRIVE		0969	Y	Y	38100-61000
	08	38100-A5300	SET-GEAR HYPOID & PINION GEAR RATIO 35:9=3.889	1	1	OP DIESEL L DRIVE			Y	Y	38100-25600
•	09	38100-25600	SET-GEAR HYPOID & PINION GEAR RATIO 35:9	1	1	OP MANUAL LD EXC VAN-DX	1069				
	10	38100-A5300	SET-GEAR HYPOID & PINION GEAR RATIO 35:9=3.889	1	1	OP MANUAL LD EXC VAN-DX			Y	Y	38100-25600
	501	38421-07200	CASE-DIFFERENTIAL	1	1	ALL					
	601	38423-73000	GEAR-SIDE BEVEL	2	1	ALL					
	701	38425-71200	PINION-MATE DIFFERENTIAL	2	1	ALL					
	801	38424-25660	WASHER-THRUST.SIDE GEAR T=0.76-0.81	2	10	ALL					
	02	38424-32200	WASHER-THRUST SIDE GEAR T=0.81-0.86	2	5	ALL					

NOTE:

© 1972 NISSAN MOTOR CO., LTD.

REVISED: DECEMBER, 1972
PRINTED IN JAPAN

DIFFERENTIAL GEAR, PINION & CASE

S	KEY NO.	PART NO.	DESCRIPTION	Q'TY	UNIT PKG FOR DIST.	APPLIED MODEL	APPLIED DATE FROM	APPLIED DATE UP TO	ICA N	ICA F	SUPERSEDED
	803	38424-32201	WASHER-THRUST SID GEAR T=0.86-0.91	2	5	ALL					
	04	38424-32202	WASHER-THRUST SIDE GEAR T=1.01-1.6	2	5	ALL					
	05	38424-32203	WASHER-THRUST SIDE GEAR T=1.06-1.11	2	5	ALL					
	901	38426-32200	WASHER-THRUST PINION MATE	2	10	ALL					
	1001	38427-25660	SHAFT-DIFFERENTIAL PINION	1	5	ALL					
	1101	38428-25660	PIN-LOCK PINION SHAFT	1	50	ALL					
*	1201	38440-25660	ASSY-BEARING DIFFERENTIAL SIDE	2	1	ALL					
	02	40210-85000	ASSY-BEARING DIFFERENTIAL SIDE	2	1	ALL		0969	Y	N	38440-25660
	1301	38453-61200	SHIM-ADJUSTING DRIVE GEAR T=0.05	AR	10	ALL					
	02	38161-27160	SHIM-ADJUSTING DRIVE GEAR T=0.05	AR	50	ALL	1069		Y	N	38453-61200
	03	38156-27160	SHIM-ADJUSTING DRIVE GEAR T=0.075	AR	50	ALL	1069		Y	N	38454-61200
	04	38455-61200	SHIM ADJUSTING DRIVE GEAR T=0.125	AR	10	ALL					
	05	38153-27160	SHIM-ADJUSTING GEAR	AR	10	ALL			Y	N	38457-61200
	06	38456-61200	SHIM ADJUSTING DRIVE GEAR T=0.250	AR	10	ALL					
	07	38154-27160	SHIM-ADJUSTING DRIVE GEAR T=0.250	AR	50	ALL		0969	Y	N	38456-61200
	08	38457-61200	SHIM ADJUSTING DRIVE GEAR T=0.5	AR	10	ALL					
	1401	38120-61000	BEARING-PINION REAR	1	1	ALL					

NOTE:

© 1972 NISSAN MOTOR CO., LTD.

PRINTED IN JAPAN

DIFFERENTIAL GEAR, PINION & CASE

S	KEY NO.	PART NO.	DESCRIPTION	Q'TY	UNIT PKG FOR DIST.	APPLIED MODEL	APPLIED DATE FROM	APPLIED DATE UP TO	ICA N	ICA F	SUPERSEDED
	1501	38140-61000	ASSY-BEARING PINION FRONT	AR	1	ALL					
	1601	38165-61001	SPACER-DRIVE PINION BEARING 1=56.00MM	AR	1	ALL					
	02	38166-61001	SPACER-DRIVE PINION BEARING 1=56.25MM	AR	1	ALL					
	03	38167-61001	SPACER-DRIVE PINION BEARING 1=56.50MM	AR	1	ALL					
	1701	38125-61001	WASHER-ADJSTING DRIVE PINION BRG 3.81	AR	10	ALL					
	02	38126-61001	WASHER-ADJUSTING DRIVE PINION BEARING T=3.83	AR	10	ALL					
	03	38127-61001	WASHER-ADJUSTING DRIVE PINION BEARING T=3.85	AR	10	ALL					
	04	38128-61001	WASHER-ADJUSTING DRIVE PINION BEARING T=3.87	AR	10	ALL					
	05	38129-61001	WASHER-ADJUSTING DRIVE PINION BEARING T=3.89	AR	10	ALL					
	06	38130-61001	WASHER-ADJUSTING DRIVE PINION BEARING T=3.91	AR	10	ALL					
	07	38131-61001	WASHER-ADJUSTING DRIVE PINION BEARING T=3.93	AR	10	ALL					
	08	38132-61001	WASHER-ADJUSTING DRIVE PINION BEARING T=3.95	AR	10	ALL					
	09	38133-61001	WASHER-ADJUSTING DRIVE PINION BEARING T=3.97	AR	10	ALL					
	10	38134-61001	WASHER-ADJUSTING DRIVE PINION BEARING T=3.99	AR	10	ALL					
	11	38135-61001	WASHER-ADJUSTING DRIVE PINION	AR	10	ALL					
	12	38136-61001	WASHER-ADJUSTING DRIVE PINION BEARING T=4.03	AR	10	ALL					

NOTE:

© 1972 NISSAN MOTOR CO., LTD.

REVISED: DECEMBER, 1972
PRINTED IN JAPAN

DIFFERENTIAL GEAR, PINION & CASE

S	KEY NO.	PART NO.	DESCRIPTION	Q'TY	UNIT PKG FOR DIST.	APPLIED MODEL	APPLIED DATE FROM	APPLIED DATE UP TO	ICA N	ICA F	SUPERSEDED
	1713	38137-61001	WASHER-ADJUSTING DRIVE PINION BEARING T=4,05	AR	10	ALL					
	14	38138-61001	WASHER-ADJUSTING DRIVE PINION BEARING T=4,07	AR	10	ALL					
	15	38139-61001	WASHER-ADJUSTING DRIVE PINION BEARING T=4,09	AR	10	ALL					
	1801	38157-61200	SHIM-ADJUSTING DRIVE PINION T=0.500	1	10	ALL					
	1901	38189-61001	SEAL-OIL DRIVE PINION	1	10	ALL			Y	Y	38189-61000
	2001	38210-73001	ASSY-FLANGE COMPANION	1	1	ALL					
	2101	38215-61000	WASHER-PLAIN	1	10	ALL					
	2201	38216-13200	NUT-DRIVE PINION	1	5	ALL					
	2301	38102-01300	BOLT-DRIVE GEAR	8	10	ALL					
	2401	38103-01300	STRAP-LOCK BOLT	4	50	ALL					

NOTE:

© 1972 NISSAN MOTOR CO., LTD.

PRINTED IN JAPAN

NOTE

NISSAN MOTOR CO., LTD.

Printed in Japan

AXLE

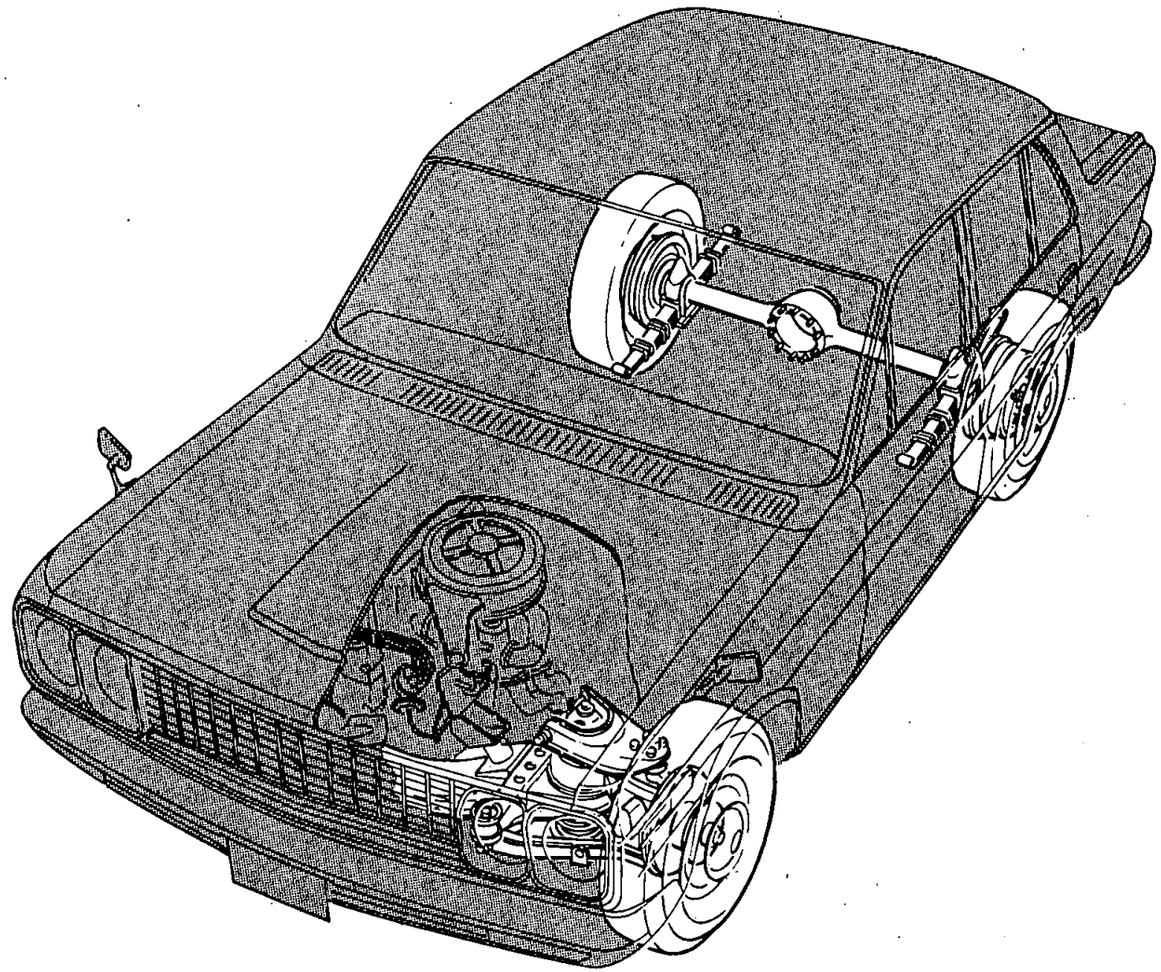

NOTE

Printed in Japan

NISSAN MOTOR CO., LTD.

FRONT AXLE (KNUCKLE ARM, ROAD WHEEL & TIRE) -DISC TYPE-

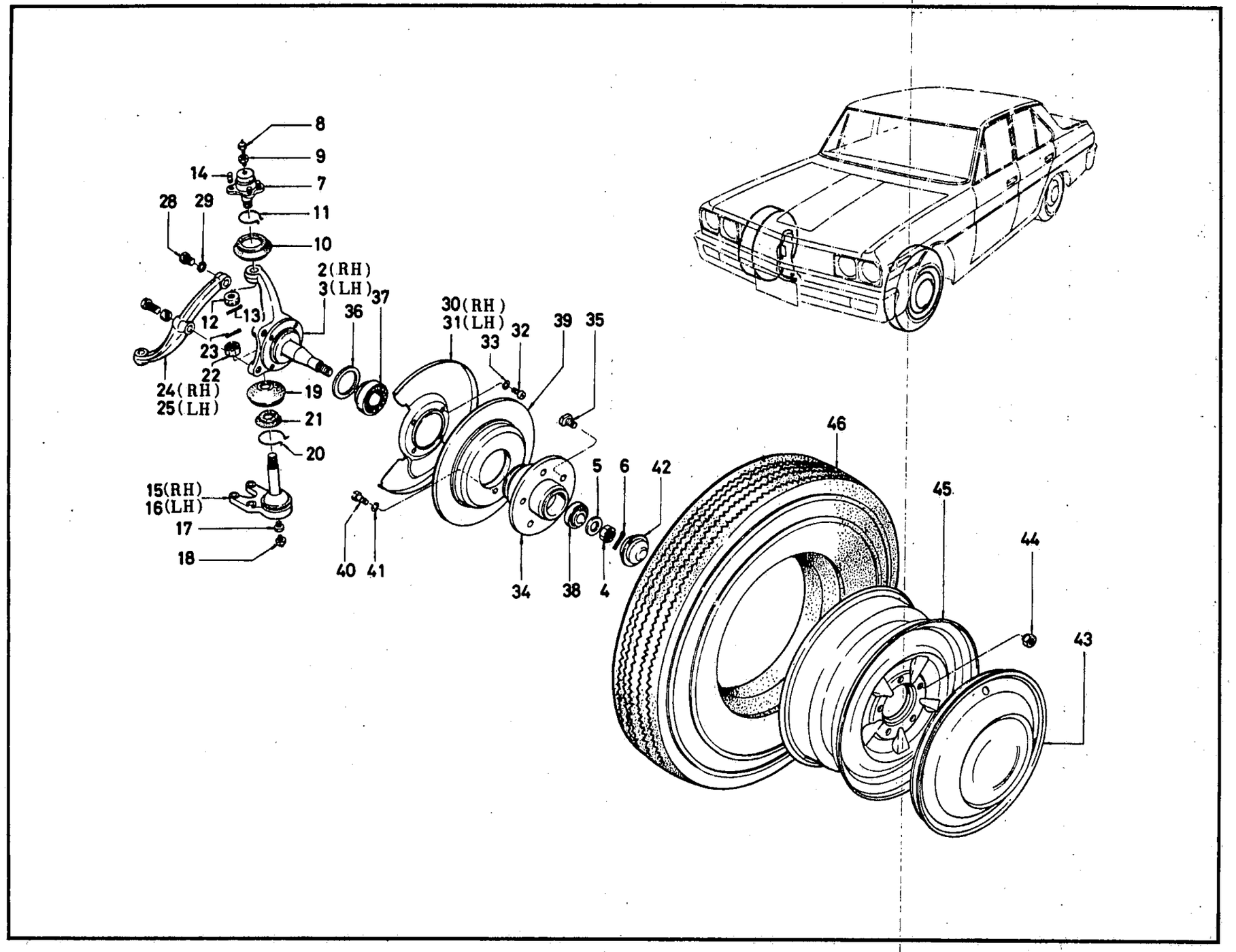

© 1972 NISSAN MOTOR CO., LTD.

REVISED: DECEMBER, 1972

PRINTED IN JAPAN

FRONT AXLE (KNUCKLE ARM, ROAD WHEEL & TIRE)- DISC TYPE -

S	KEY NO.	PART NO.	DESCRIPTION	QTY	UNIT PKG FOR DIST.	APPLIED MODEL	APPLIED DATE FROM	APPLIED DATE UP TO	ICA N	ICA F	SUPERSEDED
	101	40000-E0150	ASSY-AXLE FRONT	1		OP DELUXE PERSONAL R DRIVE		0969			
	02	40000-E0151	ASSY-AXLE FRONT	1	1	OP SUPER DELUXE PERSONAL WAGON L DRIVE		0969			
	03	40000-E0239	ASSY-AXLE FRONT	1	1	G-DX		0969			
	04	40000-E1230	ASSY-AXLE FRONT	1		DELUXE AUTOMATIC L DRIVE		0969			
	05	40000-E1730	ASSY-AXLE FRONT	1		SUPER PERSONAL R DRIVE		0969			
	06	40000-E3150	ASSY-AXLE FRONT	1		SUPER P-DX2400 AUTOMATIC R DRIVE	1069				
	07	40000-E3030	ASSY-AXLE FRONT	1		CUSTUM P-DX MANUAL R DRIVE	1069				
	08	40000-E3130	ASSY-AXLE FRONT	1		OP P-DX2400 AUTO SUPER COOLER USE R DRIVE	1069				
	09	40000-E3131	ASSY-AXLE FRONT	1		OP P-DX MANUAL CUSTUM COOLER USE R DRIVE	1069				
	10	40000-E3132	ASSY-AXLE FRONT	1		OP SEDAN EXC STD LD COOLER & HIGH SPEED AREA USE	1069				
	11	40000-E1050	ASSY-AXLE FRONT	1		SEDAN EXC STD L DRIVE	1069				
	12	40000-E1050	ASSY-AXLE FRONT	1		OP SUPER(COOLER USE)S/CUSTUM(H/SPEED AREA USE)LD	1069				
	13	43000-E0150	ASSY-AXLE FRONT	1	1	OP CUSTUM P-DX2000 MANUAL	1069				
	14	43000-E0130	ASSY-AXLE FRONT	1		SEDAN EXC STD P-DX2400 MANUAL R DRIVE	1069				

NOTE:

© 1972 NISSAN MOTOR CO., LTD.

PRINTED IN JAPAN

FRONT AXLE (KNUCKLE ARM, ROAD WHEEL & TIRE)- DISC TYPE -

S	KEY NO.	PART NO.	DESCRIPTION	QTY	UNIT PKG FOR DIST.	APPLIED MODEL	APPLIED DATE FROM	APPLIED DATE UP TO	ICA N	ICA F	SUPERSEDED
	115	43000-E0130	ASSY-AXLE FRONT	1		SUPER CUSTUM P-DX 2400 AUTO H/SPEED AREA USE LD	1069				
	16	43000-E1730	ASSY-AXLE FRONT	1		SUPER P-DX 2000 MANUAL LD HIGH SPEED AREA USE	1069				
	201	40014-73450	ASSY-SPINDLE KNUCKLE WITH NUT RH	1	1	SUPER					
	301	40015-73450	ASSY-SPINDLE KNUCKLE WITH NUT LH	1	1	SUPER					
	401	40040-04100	NUT-SPINDLE	2	10	ALL					
•	501	40037-04100	WASHER-FRONT WHEEL BEARING	2	10	ALL					
	02	40264-E3200	WASHER-FRONT WHEEL BEARING	2	5	ALL		0969	Y	Y	40037-04100
	601	00921-43010	PIN-COTTER	2	50	ALL					
	701	40110-E0100	ASSY-JOINT BALL FRONT SUSPENSION UPPER	2	1	ALL					
	801	40189-73000	PLUG-FILLER	2	10	ALL					
	901	37138-69800	NIPPLE-GREASE	2	10	ALL			Y	Y	00932-20200
	1001	40142-E0100	COMP-COVER DUST BALL JOINT UPPER	2	5	ALL					
	1101	40146-73000	CLAMP-DUST COVER UPPER	2	10	ALL					
	1201	00911-64710	NUT-TO ATTACH UPPER BALL JOINT	2	50	ALL					
	1301	00921-32510	PIN-COTTER TO ATTACH UPPER BALL JOINT	2	50	ALL					
	1401	00264-52010	STUD-FIXING UPPER BALL JOINT TO UPPER LINK	8	50	ALL					
	1501	40160-E0100	ASSY-JOINT BALL FRONT SUSPENSION LOWER RH	1	1	ALL					

NOTE:

© 1972 NISSAN MOTOR CO., LTD.

PRINTED IN JAPAN

FRONT AXLE (KNUCKLE ARM, ROAD WHEEL & TIRE)- DISC TYPE -

S	KEY NO.	PART NO.	DESCRIPTION	QTY	UNIT PKG FOR DIST.	APPLIED MODEL	APPLIED DATE FROM	APPLIED DATE UP TO	ICA N	ICA F	SUPERSEDED
	1601	40161-E0100	ASSY-JOINT BALL FRONT SUSPENSION LOWER LH	1	1	ALL					
	1701	40189-73000	PLUG-FILLER	2	10	ALL			Y	Y	00932-20200
	1801	37138-69800	NIPPLE-GREASE	2	10	ALL					
	1901	40192-73000	COVER-DUST LOWER BALL JOINT	2	5	ALL					
	2001	40196-73001	CLAMP-DUST COVER LOWER BALL JOINT	2	10	ALL					
	2101	40198-E0100	COVER-DUST LOWER BALL JOINT INNER	2	5	ALL					
	2201	00911-85010	NUT-SELF LOCKING TO ATTACH LOWER B/JOINT 5/8-18	2	25	ALL					
	2301	00921-43510	PIN-COTTER TO ATTACH LOWER BALL JOINT	2	50	ALL					
	2401	40052-73401	ARM-KNUCKLE REAR	1	1	SUPER					
	2501	40053-73401	ARM-KNUCKLE LH	1	1	SUPER					
	2601	40038-73000	BOLT-STOPPER STEERING	2	10	ALL					
•	2701	00911-34610	NUT 3/8-24	2	50	ALL					
	02	41005-16505	NUT 3/8-24	2	10	ALL			Y	N	00911-34610
	2801	00134-73810	BOLT-TO ATTACH KNUCKLE ARM	2	50	SUPER					
	2901	00915-11710	WASHER-LOCK TO ATTACH KNUCKLE ARM	2	50	SUPER					
•	3001	41006-E0100	ASSY-PLATE BAFFLE RH	1	1	SUPER					
	02	41006-E0101	ASSY-PLATE BAFFLE RH	1	1	SUPER			C	N	41006-E0100
	3101	41016-E0100	ASSY-PLATE BAFFLE LH	1	1	SUPER					
	3201	00344-41210	SCREW	8	50	SUPER					
	3301	00916-11410	WASHER-LOCK INTERNAL TOOTH	8	50	SUPER					

NOTE:

© 1972 NISSAN MOTOR CO., LTD.

PRINTED IN JAPAN

FRONT AXLE (KNUCKLE ARM, ROAD WHEEL & TIRE)- DISC TYPE -

S	KEY NO.	PART NO.	DESCRIPTION	QTY	UNIT PKG FOR DIST.	APPLIED MODEL	APPLIED DATE FROM	APPLIED DATE UP TO	ICA N	ICA F	SUPERSEDED
	3401	40202-73450	ASSY-HUB FRONT WHEEL	2	1	SUPER			Y	Y	40202-73400
	3501	40222-73400	BOLT-HUB ROAD WHEEL	10	10	SUPER					
	3601	40227-73000	SEAL-GREASE FRONT HUB	2	10	ALL					
	3701	40210-73000	ASSY-BEARING FRONT WHEEL INNER	2	1	ALL					
*	3801	40215-10360	ASSY-BEARING FRONT WHEEL OUTER	2	1	ALL					
	02	40215-P0100	ASSY-BEARING FRONT WHEEL OUTER	2	5	ALL			Y	N	40215-10360
*	3901	40206-73401	ROTOR-DISC BRAKE	2	1	SUPER					
	02	40206-E3200	ROTOR-DISC BRAKE	2	1	SUPER			N	N	40206-73401
	4001	40208-73400	BOLT-TO ATTACH ROTOR	2	10	SUPER					
	4101	00915-11610	WASHER-LOCK TO ATTACH ROTOR	2	50	SUPER					
	4201	40234-04100	CAP-HUB FRONT WHEEL	2	5	ALL					
	4301	40315-69000	ASSY-COVER ROAD WHEEL	2	1	OP SUPER DX PERSONAL		0969			
	02	40315-E3201	ASSY-COVER ROAD WHEEL	2	1	SUPER CUSTOM	1069				
	4401	40224-73000	NUT-ROAD WHEEL	10	10	ALL					
*	4501	40300-73001	ASSY-WHEEL ROAD 5-JX13	2	1	SEDAN		0969			
	02	40300-78100	ASSY-WHELL ROAD 5-JX13	2	1	SEDAN		0969	Y	N	40300-73001
	03	40300-F0200	ASSY-WHEEL ROAD 5-JX14	2	1	ALL EXC VAN-DX STD	1069				
	04	40300-E0902	ASSY-ROAD WHEEL 4 1/2-JX14	2	1	STD	1069				
*	4601	40310-73002	SET-TIRE & TUBE W/L 7.00-13-4PR	2		ALL EXC STD		0969			
#	02	40312-77900	TIRE-TUBE LESS 7.00-13-4PR	2		OP ALL		0969			

NOTE:

© 1972 NISSAN MOTOR CO., LTD.

REVISED: DECEMBER, 1972
PRINTED IN JAPAN

FRONT AXLE (KNUCKLE ARM, ROAD WHEEL & TIRE)- DISC TYPE -

S	KEY NO.	PART NO.	DESCRIPTION	QTY	UNIT PKG FOR DIST.	APPLIED MODEL	APPLIED DATE FROM	APPLIED DATE UP TO	ICA N	ICA F	SUPERSEDED
#	46 03	40312-77902	TIRE-7.00-13-4PR	2		OP ALL		0969			
#	04	40312-77912	TIRE-TUBE LESS HIGH SPEED 7.00-13-4PR	2		OP ALL		0969			
#	05	40310-73022	SET-TIRE & TUBE 7.00-13-6PR	2		OP R DRIVE		0969			
#	06	40310-73008	SET-TIRE & TUBE 7.00-13-6PR	2		OP SEDAN EXC DIESEL		0969			
#	07	40310-73012	SET-TIRE & TUBE HIGH SPEED 7.00-13-4PR	2		OP SEDAN EXC DIESEL		0969			
#	08	40310-73010	SET-TIRE & TUBE HIGH SPEED 7.00-13-4PR	2		OP SEDAN EXC DIESEL		0969			
#	09	40312-E3203	TIRE-TUBE LESS 6.95-14-4PR	2		SEDAN EXC STD	1069				
#	10	40312-E3213	TIRE-6.95S14-4PR TUBE LESS	2		OP SEDAN EXC STD WAGON	1069				
#	11	40310-E3208	TIRE-SNOW 6.95-14-4PR	2		OP SEDAN EXC STD	1069				
#	12	40312-E3503	TIRE-TUBE LESS 6.95-14-6PR	2		WAGON	1069				
#	13	40310-E0901	SET-TIRE & TUBE 6.40-14-4PR	2		STD	1069				
#	14	40310-73202	SET-TIRE & TUBE 6.00-13-6PR	2		VAN-DX	1069				
#	15	40310-73200	SET-TIRE & TUBE 6.00-13-6PR	2		OP VAN-DX	1069				
#	16	40310-73208	SNOW 6.00-13-6PR	2		OP VAN-DX	1069				

NOTE:

PRINTED IN JAPAN

© 1972 NISSAN MOTOR CO., LTD.

NOTE

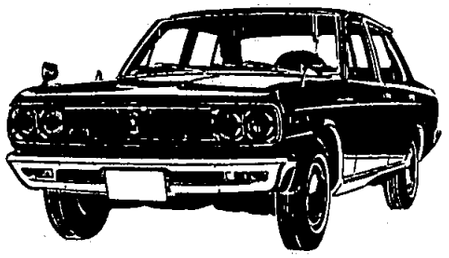

NISSAN MOTOR CO., LTD.

Printed in Japan

NOTE

Printed in Japan

NISSAN MOTOR CO., LTD.

FRONT AXLE (KNUCKLE ARM, ROAD WHEEL & TIRE) -DRUM TYPE-

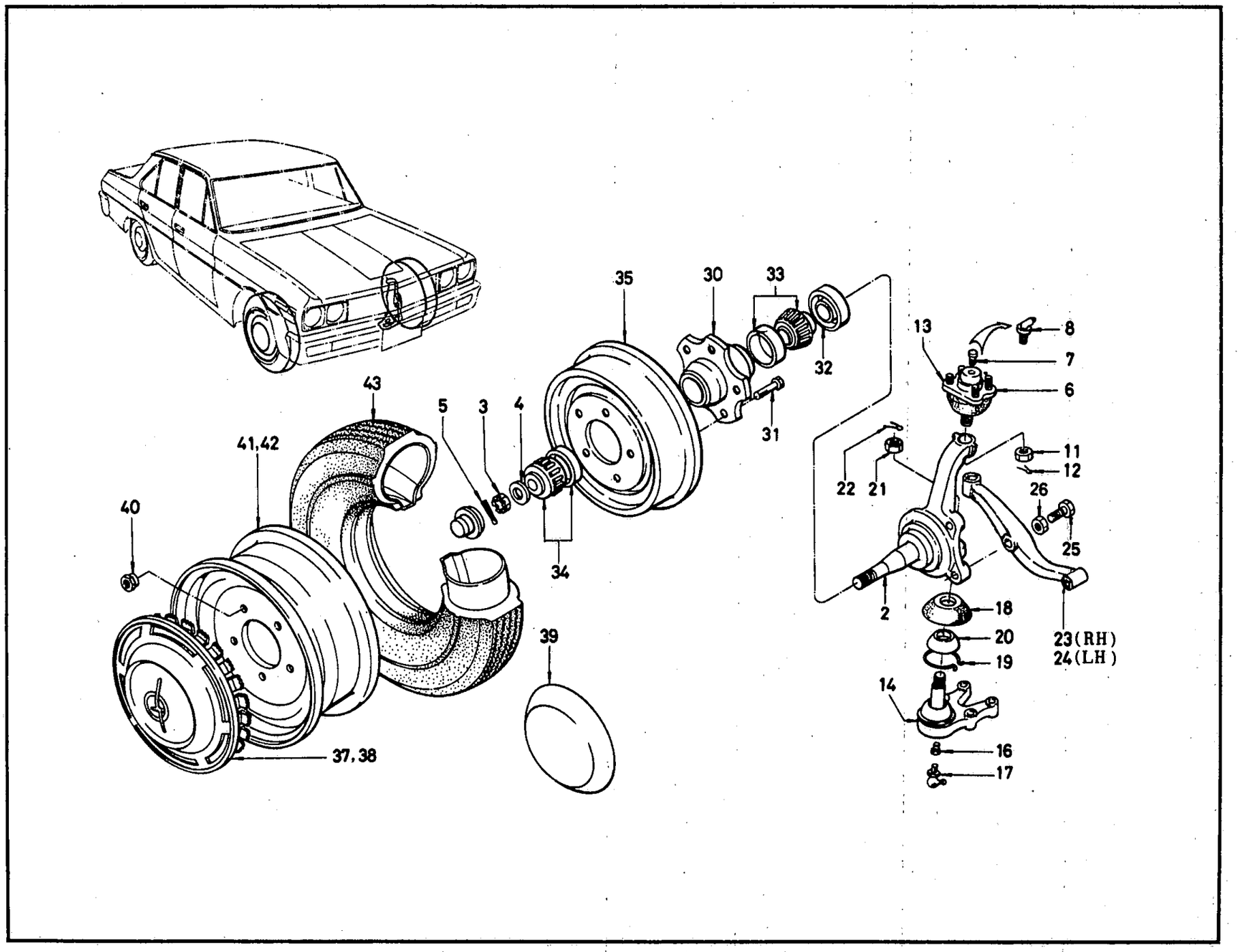

ILLUSTRATION **181A**

© 1972 NISSAN MOTOR CO., LTD.

REVISED: DECEMBER, 1972

PRINTED IN JAPAN

FRONT AXLE (KNUCKLE ARM, ROAD WHEEL & TIRE) - DRUM TYPE -

S	KEY NO.	PART NO.	DESCRIPTION	QTY	UNIT PKG FOR DIST.	APPLIED MODEL	APPLIED DATE FROM	APPLIED DATE UP TO	ICA N	ICA F	SUPERSEDED
	101	40000-E1750	ASSY-AXLE FRONT	1		SUPER PERSONAL R DRIVE		0969			
	02	40000-E1850	ASSY-AXLE FRONT	1	1	SUPER DX PERSONAL WAGON L DRIVE		0969			
	03	40000-E1450	ASSY-AXLE FRONT	1	1	VAN L DRIVE		0969			
•	04	40000-E1950	ASSY-AXLE FRONT	1	1	DIESEL L DRIVE		0969			
	05	40000-E3755	ASSY-AXLE FRONT	1		DIESEL L DRIVE		0969	Y	N	40000-E1950
	06	40000-E3555	ASSY-AXLE FRONT	1		VAN-DX RD VAN-DX LD(HIGH SPEED AREA USE)	1069				
	07	40000-E3035	ASSY-AXLE FRONT	1		P-DX MANUAL R DRIVE	1069				
	08	40000-E3530	ASSY-AXLE FRONT	1	1	WAGON P-DX2400 AUTOMATIC R DRIVE	1069				
	09	40000-E3750	ASSY-AXLE FRONT	1		H20 RD H20 LD(HIGH SPEED AREA USE)	1069				
	10	40000-E3133	ASSY-AXLE FRONT	1		OP VAN-DX (COOLER & H/SPEED AREA USE LD)	1069				
	11	40000-E3134	ASSY-AXLE FRONT	1		OP P-DX R DRIVE (COOLER USE)	1069				
	12	40000-E3135	ASSY-AXLE FRONT	1		OP WAGON P-DX2400 AUTOMATIC R DRIVE (COOLER USE)	1069				
	13	40000-E3136	ASSY-AXLE FRONT	1		OP H20 R DRIVE (COOLER USE)	1069				
	14	40000-E3138	ASSY-AXLE FRONT	1		OP P-DX L DRIVE (COOLER USE)	1069				
	15	40000-E3139	ASSY-AXLE FRONT	1		OP H20 L DRIVE (COOLER & HIGH SPEED AREA USE)	1069				

NOTE:

© 1972 NISSAN MOTOR CO., LTD.

PRINTED IN JAPAN

FRONT AXLE (KNUCKLE ARM, ROAD WHEEL & TIRE) - DRUM TYPE -

S	KEY NO.	PART NO.	DESCRIPTION	QTY	UNIT PKG FOR DIST.	APPLIED MODEL	APPLIED DATE FROM	APPLIED DATE UP TO	ICA N	ICA F	SUPERSEDED
	116	40000-E0330	ASSY-AXLE FRONT	1		H20 R DRIVE	1069				
	17	40000-E0950	ASSY-AXLE FRONT	1		DIESEL R DRIVE	1069				
	18	40000-E0230	ASSY-AXLE FRONT	1	1	P-DX WAGON WAGON MANUAL(H/SPEED AREA USE) LD	1069				
	19	40000-E3755	ASSY-AXLE FRONT	1		DIESEL L DRIVE (HIGH SPEED AREA USE)	1069		Y	N	40000-E1950
•	20	40000-E1950	ASSY-AXLE FRONT	1	1	DIESEL L DRIVE (HIGH SPEED AREA USE)	1069				
	21	43000-E1230	ASSY-AXLE FRONT	1		OP P-DX2000 STD WAGON MANUAL H/SPEED AREA USE	1069				
	22	43000-E1250	ASSY-AXLE FRONT	1	1	P-DX WAGON STD	1069				
	23	43000-E1250	ASSY-AXLE FRONT	1	1	WAGON AUTOMATIC DIESEL LD HIGH SPEED AREA USE	1069				
	24	43000-E1750	ASSY-AXLE FRONT	1		WAGON MANUAL STD OP DIESEL(HIGH SPEED AREA USE) LD	1069				
	25	43000-F0430	ASSY-AXLE FRONT	1	1	VAN-DX (HIGH SPEED AREA USE L DRIVE)	1069				
	201	40014-73050	ASSY-SPINDLE KNUCKLE WITH NUT	2	1	ALL EXC SUPER P-2300 P-DX2400					
	301	40040-04100	NUT-SPINDLE	2	10	ALL					
•	401	40037-04100	WASHER-FRONT WHEEL BEARING	2	10	ALL					
	02	40264-E3200	WASHER-FRONT WHEEL BEARING	2	5	ALL	1069		Y	N	40037-04100
	501	00921-43010	PIN-COTTER	2	50	ALL					

NOTE:

© 1972 NISSAN MOTOR CO., LTD.

REVISED: DECEMBER, 1972
PRINTED IN JAPAN

FRONT AXLE (KNUCKLE ARM, ROAD WHEEL & TIRE)- DRUM TYPE -

S	KEY NO.	PART NO.	DESCRIPTION	Q'TY	UNIT PKG FOR DIST.	APPLIED MODEL	APPLIED DATE FROM	APPLIED DATE UP TO	ICA N	ICA F	SUPERSEDED
	601	40110-E0100	ASSY-JOINT BALL FRONT SUSPENSION UPPER	2	1	ALL					
	701	40189-73000	PLUG-FILLER	2	10	ALL					
	801	37138-69800	NIPPLE-GREASE	2	10	ALL			Y	Y	00932-20200
	901	40142-E0100	COMP-COVER DUST BALL JOINT UPPER	2	5	ALL					
	1001	40146-73000	CLAMP-DUST COVER UPPER	2	10	ALL					
	1101	00911-84710	NUT-TO ATTACH UPPER BALL JOINT	2	50	ALL					
	1201	00921-32510	PIN-COTTER TO ATTACH UPPER BALL JOINT	2	50	ALL					
	1301	00264-52010	STUD-FIXING UPPER BALL JOINT TO UPPER LINK	8	50	ALL					
	1401	40160-E0100	ASSY-JOINT BALL FRONT SUSPENSION LOWER RH	1	1	ALL					
	1501	40161-E0100	ASSY-JOINT BALL FRONT SUSPENSION LOWER LH	1	1	ALL					
	1601	40189-73000	PLUG-FILLER	2	10	ALL					
	1701	37138-69800	NIPPLE-GREASE	2	10	ALL			Y	Y	00932-20200
	1801	40192-73000	COVER-DUST LOWER BALL JOINT	2	5	ALL					
	1901	40196-73001	CLAMP-DUST COVER LOWER BALL JOINT	2	10	ALL					
	2001	40198-E0100	COVER-DUST LOWER BALL JOINT INNER	2	5	ALL					
	2101	00911-85010	NUT-SELF LOCKING TO ATTACH LOWER BALL JOINT	2	25	ALL					
	2201	00921-43510	PIN-COTTER TO ATTACH LOWER BALL JOINT	2	50	ALL					

NOTE:

© 1972 NISSAN MOTOR CO., LTD.

PRINTED IN JAPAN

FRONT AXLE (KNUCKLE ARM, ROAD WHEEL & TIRE) - DRUM TYPE -

S	KEY NO.	PART NO.	DESCRIPTION	QTY	UNIT PKG FOR DIST.	APPLIED MODEL	APPLIED DATE FROM	APPLIED DATE UP TO	ICA N	ICA F	SUPERSEDED
	2301	40052-73001	ARM-KNUCKLE RH	1	1	ALL EXC SUPER					
	2401	40053-73001	ARM-KNUCKLE LH	1	1	ALL EXC SUPER					
	2501	40038-73000	BOLT-STOPPER STEERING	2	10	ALL					
•	2601	00911-34610	NUT 3/8-24	2	50	ALL					
	02	41005-16505	NUT 3/8-24	2	10	ALL			Y	N	00911-34610
	2701	00134-64510	BOLT-TO ARM & BRAKE DISC	2	25	ALL EXC SUPER					
•	2801	00124-74010	BOLT-TO ATTACH ARM & BRAKE DISC TO SPINDLE	4		ALL EXC SUPER					
	2901	00912-44710	NUT-SELF LOCK	4	50	ALL EXC SUPER					
•	3001	40202-73000	ASSY-HUB FRONT WHEEL	2		ALL					
	3101	40222-73000	BOLT-HUB ROAD WHEEL	10	10	ALL					
	3201	40227-73000	SEAL-GREASE FRONT HUB	2	10	ALL					
	3301	40210-73000	ASSY-BEARING FRONT WHEEL INNER	2	1	ALL					
•	3401	40215-10360	ASSY-BEARING FRONT WHEEL OUTER	2	1	ALL					
	02	40215-P0100	ASSY-BEARING FRONT WHEEL OUTER	2	10	ALL			Y	N	40215-10360
	3501	40206-78000	DRUM-BRAKE FRONT	2	1	ALL					
	3601	82302-E0100	ASSY-CHANNEL GLASS REAR DOOR BOTTOM RH	1	1	WAGON & VAN					
	3701	40315-69000	ASSY-COVER ROAD WHEEL	2	1	ALL EXC VAN STD DIESEL		0969			
	3801	40315-69600	ASSY-COVER ROAD WHEEL	2	1	VAN					
	3901	40315-69200	CAP-ROAD WHEEL	2	1	STD DIESEL					
	02	40315-E3200	ASSY-COVER ROAD WHEEL	2	1	P-DX WAGON	1069				

NOTE:

ILLUSTRATION **181A**

© 1972 NISSAN MOTOR CO., LTD.

REVISED: DECEMBER, 1972

PRINTED IN JAPAN

FRONT AXLE (KNUCKLE ARM, ROAD WHEEL & TIRE) - DRUM TYPE -

S	KEY NO.	PART NO.	DESCRIPTION	QTY	UNIT PKG FOR DIST.	APPLIED MODEL	APPLIED DATE FROM	APPLIED DATE UP TO	ICA N	ICA F	SUPERSEDED
	4001	- 40224-73000	NUT-ROAD WHEEL	10	10	ALL					
•	4101	- 40300-73001	ASSY-WHEEL ROAD 5-JX13	2	1	ALL EXC VAN					
•	4201	- 40300-E0900	ASSY-WHEEL ROAD 41/2-JX14	2	1	DIESEL					
	02	- 40300-F0200	ASSY-WHEEL ROAD 5-JX14	2	1	ALL EXC VAN-DX STD					
	03	- 40300-E0902	ASSY-ROAD WHEEL 4 1/2-JX14	2	1	STD					
	04	- 40300-77400	ASSY-WHEEL ROAD 4 1/2-JX13	2	1	VAN-DX	1069		Y	Y	40300-78000
#	4301	- 40310-73002	SET-TIRE & TUBE W/L 7.00-13-4PR	2		ALL EXC STD		0969			
#	02	- 40312-77900	TIRE-TUBE LESS 7.00-13-4PR	2		OP ALL		0969			
#	03	- 40312-77902	TIRE-200-13-4PR	2		OP ALL		0969			
#	04	- 40312-77912	TIRE-TUBE LESS HIGH SPEED 7.00-13-4PR	2		OP ALL		0969			
#	05	- 40310-73022	SET-TIRE & TUBE 7.00-13-6PR	2		OP R DRIVE		0969			
#	06	- 40310-73008	SET-TIRE & TUBE SNOW	2		OP SEDAN EXC DIESEL		0969			
#	07	- 40310-73012	SET-TIRE & TUBE HIGH SPEED 7.00-13-4PR	2		OP SEDAN EXC DIESEL		0969			
#	08	- 40310-73010	SET-TIRE & TUBE HIGH SPEED 7.00-13-4PR	2		OP SEDAN EXC DIESEL		0969			
#	09	- 40310-73000	SET-TIRE & TUBE 7.00-13-4PR	2		STD L DRIVE		0969			
#	10	- 40310-E0908	SET-TIRE & TUBE 6.40-14-6PR	2		OP STD		0969			
#	11	- 40310-73202	SET-TIRE & TUBE 6.00-13-16PRLT	2		VAN-DX OP VAN	1069				
#	12	- 40310-73200	SET-TIRE & TUBE 6.00-13-6PRLT	2		OP VAN-DX VAN	1069				
#	13	- 40310-73208	SET-TIRE & TUBE SNOW 6.00-13-6PRLT	2		OP VAN-DX VAN	1069				

NOTE:

© 1972 NISSAN MOTOR CO., LTD.

PRINTED IN JAPAN

FRONT AXLE (KNUCKLE ARM, ROAD WHEEL & TIRE) - DRUM TYPE -

S	KEY NO.	PART NO.	DESCRIPTION	QTY	UNIT PKG FOR DIST.	APPLIED MODEL	APPLIED DATE FROM	APPLIED DATE UP TO	ICA N	ICA F	SUPERSEDED
#	4314	40310-E0901	SET-TIRE & TUBE 6.40-14-4PR	2		STD	1069				
#	15	40312-E3203	TIRE-TUBE LESS 6.95-14-4PR	2		SEDAN EXC STD	1069				
#	16	40312-E3213	TIRE TUBE LESS 6.95S14-4PR	2		OP SEDAN EXC STD WAGON	1069				
#	17	40310-E3208	TIRE-SNOW 6.95-14-4PR	2		OP SEDAN EXC STD	1069				
#	18	40312-E3503	TIRE-TUBE LESS 6.95-14-6PR	2		WAGON	1069				

NOTE:

© 1972 NISSAN MOTOR CO., LTD.

REVISED: DECEMBER, 1972
PRINTED IN JAPAN

NOTE

Printed in Japan

NISSAN MOTOR CO., LTD.

FRONT SUSPENSION (STRUT & SHOCK ABSORBER)

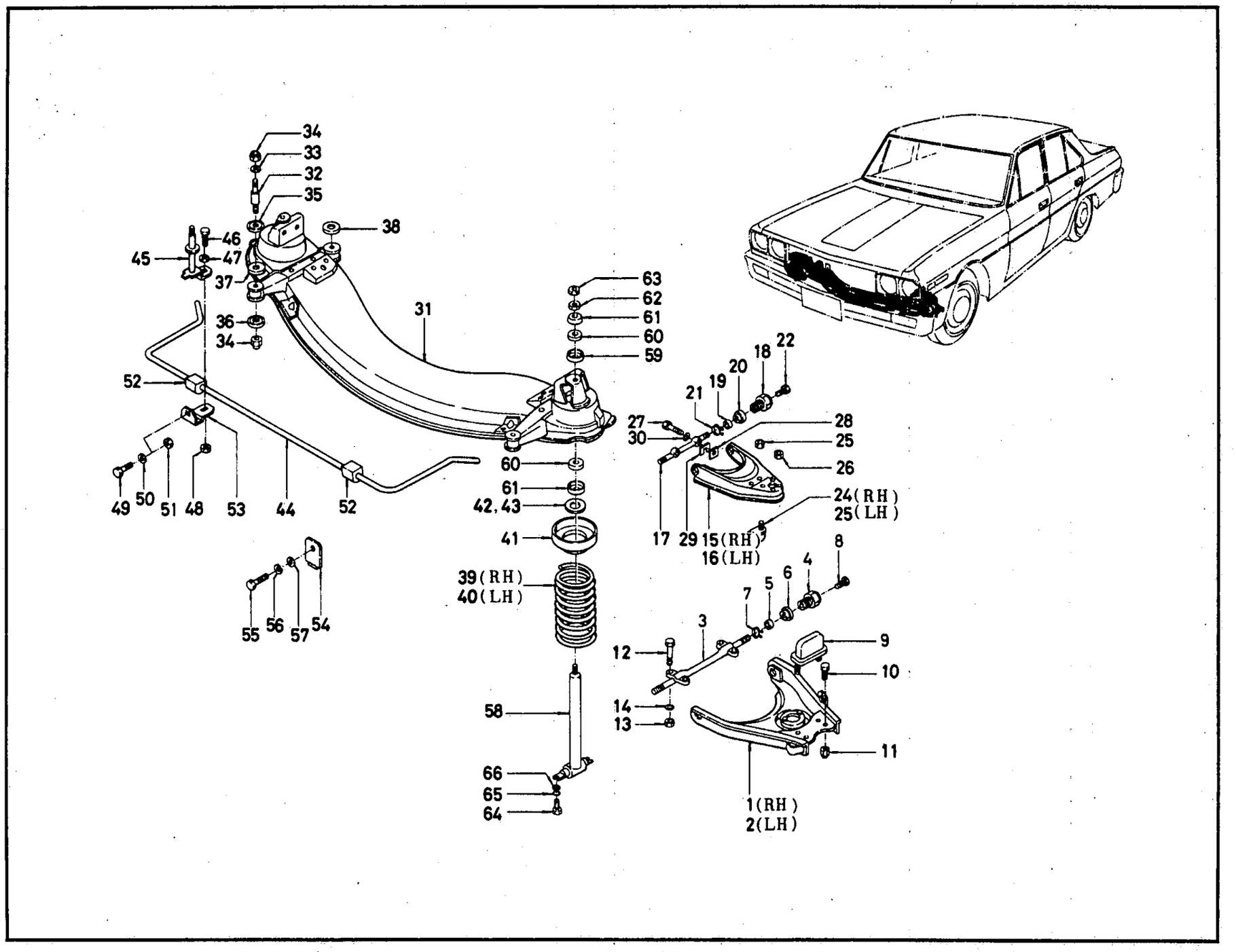

ILLUSTRATION **182**

© 1972 NISSAN MOTOR CO., LTD.

REVISED: DECEMBER, 1972

PRINTED IN JAPAN

FRONT SUSPENSION (STRUT & SHOCK ABSORBER)

S	KEY NO.	PART NO.	DESCRIPTION	Q'TY	UNIT PKG FOR DIST.	APPLIED MODEL	APPLIED DATE FROM	APPLIED DATE UP TO	ICA N	ICA F	SUPERSEDED
	101	54529-73000	ASSY-LINK LOWER FRONT SUSPENSION RH	1	1	ALL					
	201	54530-73000	ASSY-LINK LOWER FRONT SUSPENSION LH	1	1	ALL					
	301	54419-73000	SPINDLE-LOWER LINK	2	1	ALL					
	401	54504-73001	ASSY-BUSH LOWER LINK	4	5	ALL					
	501	54539-73001	SEAL-DUST LOWER LINK BUSH	4	10	ALL					
	601	54540-73001	COVER-DUST LOWER LINK BUSH	4	10	ALL					
	701	54541-73001	CLAMP-DUST COVER LOWER	4	10	ALL					
	801	40189-73000	PLUG-FILLER	4	10	ALL					
	901	54050-73001	ASSY-BUMPER BOUND FRONT SUSPENSION	2	1	ALL					
	1001	00134-64510	BOLT TO ATTACH LOWER BALL JOINT TO LOWER LINK	4	25	ALL					
	1101	00912-44610	NUT TO ATTACH LOWER BALL JOINT TO LOWER 3/8-24	8	50	ALL					
	1201	00124-63510	BOLT LOWER LINK TO MEMBER 3/8-24	8	25	ALL					
	1301	00911-24610	NUT LOWER LINK TO MEMBER 3/8-24	8	50	ALL					
	1401	00915-11610	WASHER-LOCK LOWER LINK TO MEMBER	8	50	ALL					
•	1501	54533-73000	ASSY-LINK UPPER RH	1	1	ALL					
	02	54533-P0600	ASSY-LINK UPPER RH	1	1	ALL	1069		Y	N	54533-73000
•	1601	54545-73000	ASSY-LINK UPPER LH	1	1	ALL					
	02	54545-P0600	ASSY-LINK UPPER LH	1	1	ALL	1069		Y	N	54545-73000
	1701	54536-73000	SPINDLE UPPER LINK	2	2	ALL					

NOTE:

© 1972 NISSAN MOTOR CO., LTD.

PRINTED IN JAPAN

FRONT SUSPENSION (STRUT & SHOCK ABSORBER)

S	KEY NO.	PART NO.	DESCRIPTION	Q'TY	UNIT PKG FOR DIST.	APPLIED MODEL	APPLIED DATE FROM	APPLIED DATE UP TO	ICA N	ICA F	SUPERSEDED
	1801	54507-73001	ASSY-BUSH UPPER LINK	4	5	ALL					
	1901	54509-73001	SEAL-DUST UPPER LINK BUSH	4	10	ALL					
	2001	54510-73001	COVER-DUST UPPER LINK BUSH	4	10	ALL					
	2101	54511-73001	CLAMP-DUST COVER UPPER	4	10	ALL					
	2201	40189-73000	PLUG-FILLER	4	10	ALL					
	2301	54053-73001	ASSY-BUMPER REBOUND RH	1	5	ALL					
	2401	54054-73001	ASSY-BUMPER REBOUND LH	1	5	ALL					
	2501	00912-34510	NUT-SELF LOCKING 5/16-24	2	50	ALL					
	2601	00912-44510	NUT-SELF LOCKING 5/16-24	8	50	ALL					
	2701	54544-32200	BOLT-UPPER LINK MOUNTING	4	10	ALL					
	2801	54542-32201	SHIM-CAMBER A(4.0T)	AR	50	ALL					
	2901	54543-32201	SHIM-CAMBER B(1.0T)	AR	50	ALL					
	02	54545-32200	SHIM-CAMBER C(2.0T)	AR	50	ALL					
	3001	00915-21910	WASHER-LOCK	4	50	ALL					
•	3101	54401-E0100	ASSY-MEMBER FRONT SUSPENSION	1	1	ALL EXC DIESEL					
	02	54401-E3200	ASSY-MEMBER FRONT SUSPENSION	1	1	ALL EXC DIESEL					
•	03	54401-E0900	ASSY-MEMBER FRONT SUSPENSION	1		DIESEL					
	04	54401-E3400	ASSY-MEMBER FRONT SUSPENSION	1	1	DIESEL			Y	N	54401-E0900
	05	54401-73510	ASSY-MEMBER FRONT SUSPENSION	1		DIESEL					
	06	54401-E0910	ASSY-MEMBER FRONT SUSPENSION	1		DIESEL					
	3201	54522-73001	BOLT-MOUNTING FRONT SUSPENSION MEMBER	4	10	ALL					
	3301	00915-41810	WASHER-PLAIN TO ATTACH MEMBER 1/2	4	50	ALL					

NOTE:

© 1972 NISSAN MOTOR CO., LTD.

REVISED: DECEMBER, 1972

PRINTED IN JAPAN

C

FRONT SUSPENSION (STRUT & SHOCK ABSORBER)

S	KEY NO.	PART NO.	DESCRIPTION	Q'TY	UNIT PKG FOR DIST.	APPLIED MODEL	APPLIED DATE FROM	APPLIED DATE UP TO	ICA N	ICA F	SUPERSEDED
	3401	00912-44810	NUT TO ATTACH MEMBER 1/2-20	8	25	ALL					
	3501	54460-73001	PLATE-MEMBER MOUNTING UPPER	4	2	ALL					
	3601	54464-73001	PLATE-MEMBER MOUNTING LOWER	4	5	ALL					
	3701	54466-73001	INSULATOR-MEMBER FRONT	2	1	ALL					
	3801	54467-73001	INSULATOR-MEMBER REAR	2	1	ALL					
	3901	54010-73001	SPRING-FRONT RH L=391	1	1	SUPPER PERSONAL RD					
	02	54010-73003	SPRING-FRONT L=406	1	1	SUPER WAGON P-DX2400(MANUAL) RD	1069				
	03	54010-73002	SPRING-FRONT RH L=398.5	1	1	DX WAGON RD					
	04	54010-73002	SPRING-FRONT RH L=398.5	1	1	CUSTOM P-DX2000 P-DX2400(MANUAL) RD	1069				
	05	54010-73000	SPRING-FRONT RH L=383.5	1	1	STANDARD R DRIVE					
	06	54010-73003	SPRING-FRONT RH L=406 FOR 70AH BATTERY	1	1	DISEL R DRIVE					
	07	54010-73002	SPRING-FRONT RH L=398.5 FOR 100AH BATTERY	1	1	DIESEL R DRIVE					
	08	54010-73200	SPRING-FRONT RH L=355.5	1	1	VAN VAN-DELUXE					
	09	54010-73001	SPRING-FRONT RH L=391	1	1	SUPER DX PERSONAL WAGON LD					
	10	54010-73002	SPRING-FRONT L=398.5	1	1	DX AUTO DIESEL LD					
	11	54010-73000	SPRING-FRONT L=383.5	1	1	STD LD					
	12	54010-73002	SPRING-FRONT L=398.5	1	1	SUPER CUSTOM P-DX WAGON LD	1069				
	4001	54010-73000	SPRING-FRONT LH L=383.5	1	1	SUPER PERSONAL RD					

NOTE:

© 1972 NISSAN MOTOR CO., LTD.

PRINTED IN JAPAN

FRONT SUSPENSION (STRUT & SHOCK ABSORBER)

S	KEY NO.	PART NO.	DESCRIPTION	Q'TY	UNIT PKG FOR DIST.	APPLIED MODEL	APPLIED DATE FROM	APPLIED DATE UP TO	ICA N	ICA F	SUPERSEDED
	4002	54010-73000	SPRING-FRONT LH L=383.5	1	1	SUPER WAGON P-DX2400 RD					
	03	54010-73001	SPRING-FRONT LH L=391	1	1	DX WAGON RD					
	04	54010-73004	SPRING-FRONT LH L=376	1	1	CUSTOM P-DX2000 STD P-DX2400(MANUAL) RD					
	05	54010-73002	SPRING-FRONT LH L=398.5 FOR 70AH BATTERY	1	1	DIESEL					
	06	54010-73200	SPRING-FRONT LH L=355.5 FOR 100AH BATTERY	1	1	DIESEL RD					
	07	54010-73200	SPRING-FRONT LH L=355.5	1	1	VAN					
	08	54010-73201	SPRING-FRONT LH	1		VAN-DX					
	09	54010-73002	SPRING-FRONT LH L=398.5	1	1	SUPER DX PERSONAL WAGON LD					
	10	54010-73003	SPRING-FRONT LH L=406	1	1	DX(AUTO) DIESEL LD					
	11	54010-73001	SPRING-FRONT LH L=391	1	1	STD LD					
	12	54010-73001	SPRING-FRONT LH L=391	1	1	SUPER CUSTOM P-DX2000 P-DX2400 WAGON LD	1069				
	13	54010-73002	SPRING-FRONT RH	1	1	SEDAN(EXC STD) WAGON	1069				
	14	54010-73001	SPRING-FRONT LH	1	1	SEDAN(EXC STD) WAGON	1069				
	4101	54036-73000	SEAT-FRONT SPRING	2	5	ALL					
	4201	54038-73000	SPACER-SEAT FRONT SPRING A(10MM)	AR	5	ALL					
	4301	54039-73000	SPACER-SEAT FRONT SPRING B(20MM)	AR	5	ALL					

NOTE:

© 1972 NISSAN MOTOR CO., LTD.

REVISED: DECEMBER, 1972

PRINTED IN JAPAN

FRONT SUSPENSION (STRUT & SHOCK ABSORBER)

S	KEY NO.	PART NO.	DESCRIPTION	Q'TY	UNIT PKG FOR DIST.	APPLIED MODEL	APPLIED DATE FROM	APPLIED DATE UP TO	ICA N	ICA F	SUPERSEDED
	4401	54611-73000	BAR-TORSION FRONT STABILIZER	1	1	SEDAN					
	02	54611-73200	BAR-TORSION FRONT STABILIZER	1	1	W & V					
	4501	54618-E0100	ASSY-ROD CONNECTING	2	1	ALL					
	4601	00124-75510	BOLT-FIX CONNECTING ROD TO BODY	2	10	ALL					
	4701	00915-11710	WASHER-SPRING FIX CONNECTING ROD TO BODY	2	50	ALL					
	4801	00911-24710	NUT FIX CONNECTING ROD TO BODY	2	50	ALL					
	4901	00114-52010	BOLT TO ATTACH STABILIZER TO CONNECTING ROD	2	50	ALL					
	5001	00915-11510	WASHER-LOCK TO ATTACH STABI TO CONNECTING ROD	2	50	ALL					
	5101	00911-14510	NUT TO ATTACH STABILIZER TO CONNECTING ROD	2	50	ALL					
	5201	54613-73000	BUSH-RUBBER MOUNTING STABILIZER	2	50	SEDAN					
	02	54613-73200	BUSH-RUBBER MOUNTING STABILIZER	2	50	W & V					
	5301	54614-73000	BRACKET-MOUNTING STABILIZER INNER	2	1	ALL					
	5401	54617-73001	PLATE-MOUNTING STABILIZER OUTER	2	5	ALL					
	5501	00114-52510	BOLT TO ATTACH STABILIZER TO LOWER LINK	2	50	ALL					
	5601	00915-11510	WASHER-LOCK TO ATTACH STABI TO LOWER LINK	2	50	ALL					
	5701	00915-41510	WASHER-PLAIN TO ATTACH STABI TO LOWER LINK	2	50	ALL					

NOTE:

© 1972 NISSAN MOTOR CO., LTD.

PRINTED IN JAPAN

FRONT SUSPENSION (STRUT & SHOCK ABSORBER)

S	KEY NO.	PART NO.	DESCRIPTION	Q'TY	UNIT PKG FOR DIST.	APPLIED MODEL	APPLIED DATE FROM	APPLIED DATE UP TO	ICA N	ICA F	SUPERSEDED
	5801	56110-73026	ASSY-SHOCK ABSORBER FRONT	2	1	ALL EXC SD22-LD					
	02	56110-77726	ASSY-SHOCK ABSORBER FRONT	2	1	SD22-LD	1069		Y	N	56110-73026
	5901	56114-73001	WASHER-SPECIAL INNER	2	10	ALL					
	6001	56127-50000	BUSH-RUBBER SHOCK ABSORBER	4	50	ALL					
	02	56112-21000	BUSH-RUBBER SHOCK ABSORBER	4	10	ALL			Y	N	56127-50000
	6101	56113-73000	WASHER-SPECIAL OUTER	4	10	ALL					
	6201	00911-14610	NUT FIX SHOCK ABSORBER TO MEMBER	2	50	ALL					
	6301	41005-16505	NUT-LOCK SHOCK ABSORBER TO MEMBER	2	10	ALL					
	02	00911-14610	NUT-LOCK SHOCK ABSORBER TO MEMBER 3/8-24	2	50	ALL			Y	N	00911-34610
	6401	00124-52010	BOLT SHOCK ABSORBER TO LOWER LINK	4	50	ALL					
	6501	00915-11510	WASHER-LOCK SHOCK ABSORBER TO LOWER LINK	4	50	ALL					
	6601	00915-41510	WASHER-PLAIN SHOCK ABSORBER TO LOWER	4	50	ALL					

NOTE:

ILLUSTRATION **182**

© 1972 NISSAN MOTOR CO., LTD.

REVISED: DECEMBER, 1972

PRINTED IN JAPAN

NOTE

Printed in Japan

NISSAN MOTOR CO., LTD.

REAR AXLE & DRIVE SHAFT

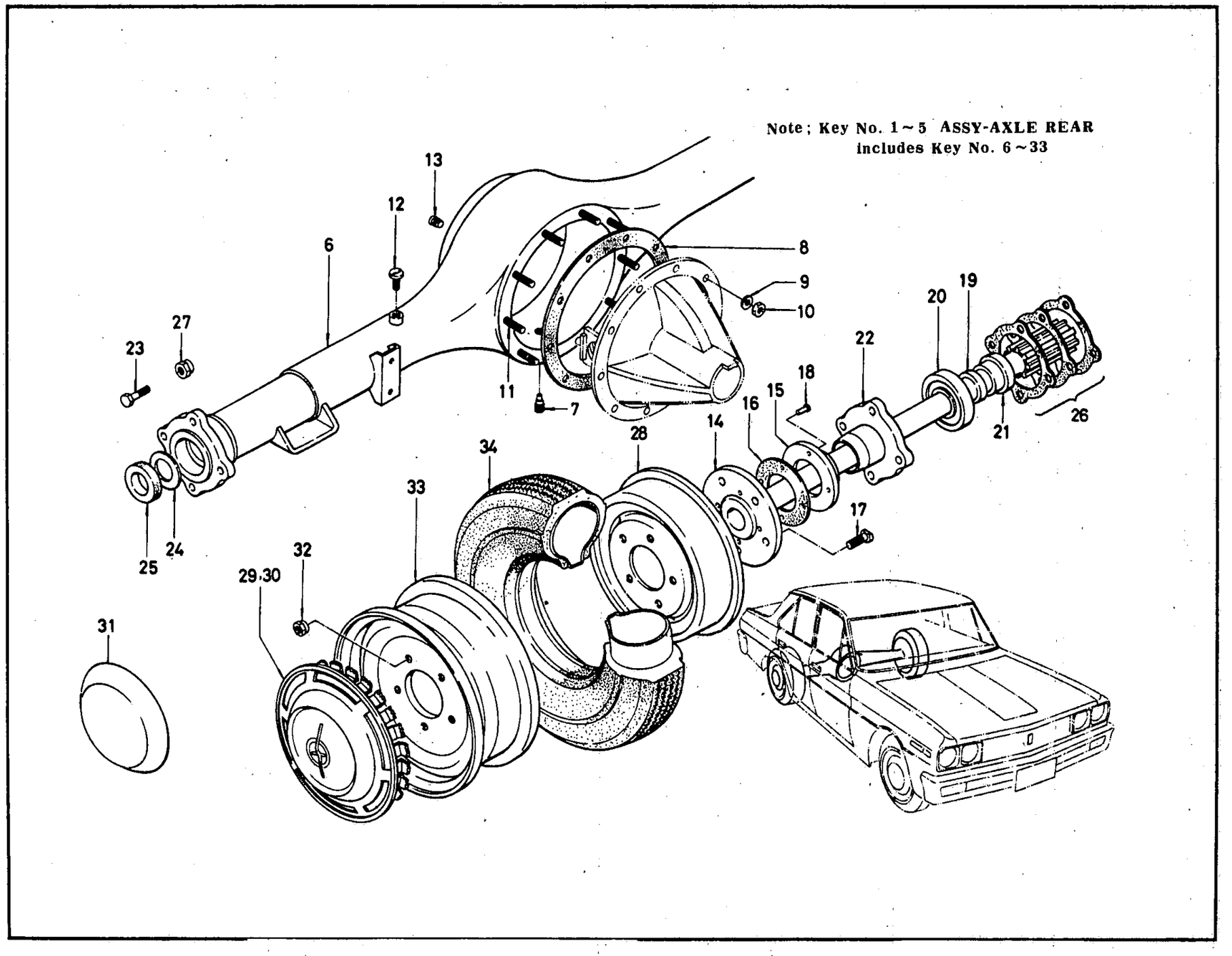

ILLUSTRATION **183**

© 1972 NISSAN MOTOR CO., LTD.

REVISED: DECEMBER, 1972

PRINTED IN JAPAN

S	KEY NO.	PART NO.	DESCRIPTION	Q'TY	UNIT PKG FOR DIST.	APPLIED MODEL	APPLIED DATE FROM	APPLIED DATE UP TO	ICA N	ICA F	SUPERSEDED
	101	43000-E013O	ASSY-AXLE REAR FOR FR DISC 3 SPEED FINAL 4.111	1		OP SUPER DELUXE PERSONAL		0969			
	201	43000-E013O	ASSY-AXLE REAR FOR FR DISC 3 SPEED FINAL 4.111	1		SUPER CUSTOM P-DX	1069				
	02	43000-E015O	ASSY-AXLE REAR FOR 3 SPEED FINAL 4.375	1	1	OP DELUXE P-2000		0969			
	03	43000-E023O	ASSY-AXLE REAR FOR 4 SPEED FINAL 3.889	1	1	G-UX					
	04	43000-E043O	ASSY-AXLE REAR FOR 4 SPEED FINAL 4.375	1	1	VAN VAN-DX					
	05	43000-E123O	ASSY-AXLE REAR FOR FR DISC 3 SPEED FINAL 4.375	1		OP DX P-2000 STD WAGON		0969			
	06	43000-E125O	ASSY-AXLE REAR FOR 3 SPEED FINAL 4.111	1	1	3 SPEED					
	07	43000-E143O	ASSY-AXLE REAR FOR 4 SPEED FINAL 4.111	1		VAN HIGH SPEED AREA(L DRIVE)		0969			
	08	43000-E173O	ASSY-AXLE REAR FOR FR DISC 4 SPEED FINAL 3.889	1		OP SUPER DELUXE PERSONAL		0969			
	301	43000-E173O	ASSY-AXLE REAR FOR FR DISC 4 SPEED FINAL 3.889	1		SUPER CUSTOM P-DX WAGON HIGH SPEED AREA	1009				
	02	43000-E175O	ASSY-AXLE REAR FOR 4 SPEED FINAL 3.889	1		L DRIVE EXC VAN & DIESEL		0969			
	401	43000-E175O	ASSY-AXLE REAR FOR 4 SPEED FINAL 3.889	1		OP DIESEL		0969			
	501	43000-E175O	ASSY-AXLE REAR FOR 4 SPEED FINAL 3.889	1		SUPER CUSTOM P-DX WAGON HIGH SPEED AREA	1069				
	601	43010-73000	COMP-CASE REAR AXLE	1	1	ALL					
	701	32103-14600	ASSY-PLUG DRAIN	1	10	ALL					

NOTE:

© 1972 NISSAN MOTOR CO., LTD.

PRINTED IN JAPAN

REAR AXLE & DRIVE SHAFT

S	KEY NO.	PART NO.	DESCRIPTION	Q'TY	UNIT PKG FOR DIST.	APPLIED MODEL	APPLIED DATE FROM	APPLIED DATE UP TO	ICA N	ICA F	SUPERSEDED
*	801	- 38320-25670	PACKING-GEAR CARRIER	1	10	ALL					
	02	- 38320-B3000	PACKING-GEAR CARRIER	1	50	ALL			Y	N	38320-25670
	901	- 00915-11510	WASHER-LOCK	10	50	ALL					
	1001	- 00911-14510	NUT	10	50	ALL					
	1101	- 43067-73000	STUD-FIX GEAR CARRIER	10	10	ALL					
	1201	- 38322-55100	ASSY-BREATHER	1	10	ALL					
	1301	- 43059-A1600	PLUG-TAPER	1	10	ALL					
	1401	- 38162-73000	ASSY-SHAFT REAR AXLE	2	1	ALL					
	1501	- 43242-73000	CATCHER-GREASE REAR AXLE	2	1	ALL					
	1601	- 43248-73000	PACKING-GREASE CATCHER REAR	2	50	ALL					
	1701	- 40222-73000	BOLT-ROAD WHEEL	10	10	ALL					
*	1801	- 00610-41600	RIVET	8	50	ALL					
	02	- 00610-41610	RIVET	8	50	ALL			Y	N	00610-41600
	1901	- 43070-32200	SPACER-REAR AXLE BEARING	2	10	ALL					
	2001	- 43215-73000	BEARING-REAR AXLE SHAFT	2	1	ALL					
	2101	- 43084-61001	COLLAR-BEARING REAR AXLE SHAFT	2	2	ALL					
	2201	- 43082-73000	CAGE-BEARING REAR AXLE	2	1	ALL					
	2301	- 43083-32201	BOLT-BEARING CAGE REAR AXLE	8	10	ALL					
	2401	- 43068-32200	SPACER-OIL SEAL REAR	2	10	ALL					
	2501	- 43232-78100	SEAL-OIL REAR AXLE SHAFT	2	10	ALL					
	2601	- 43219-32200	SHIM-REAR AXLE CASE END	AR	50	ALL					
	2701	- 00912-44610	NUT-SELF LOCKING	8	50	ALL					

NOTE:

© 1972 NISSAN MOTOR CO., LTD.

REVISED: DECEMBER, 1972
PRINTED IN JAPAN

S	KEY NO.	PART NO.	DESCRIPTION	QTY	UNIT PKG FOR DIST.	APPLIED MODEL	APPLIED DATE FROM	APPLIED DATE UP TO	ICA N	ICA F	SUPERSEDED
	2801	43206-78000	DRUM-REAR BRAKE	2	1	ALL					
	2901	40315-69000	ASSY-COVER ROAD WHEEL	2	1	SUPER DX PERSONAL WAGON		0969			
	3001	40315-69600	ASSY-COVER ROAD WHEEL	2	1	VAN-DEX					
	02	40315-E3200	ASSY-COVER ROAD WHEEL	2	1	P-DX WAGON	1069				
	03	40315-E3201	ASSY-COVER ROAD WHEEL	2	1	SUPER CUSTUM	1069				
	3101	40315-69200	CAP-ROAD WHEEL	2	1	STANDARD DIESEL					
	3201	40224-73000	NUT-ROAD WHEEL	10	10	ALL					
	3301	40300-78100	ASSY-WHEEL ROAD 5-JX13	2	1	ALL EXC VAN STD					
	02	40300-F0200	ASSY-WHEEL ROAD 5-JX14	2	1	WAGON SEDAN EXC STD	1069				
*	03	40300-E0900	ASSY-WHEEL ROAD 4 1/2-JX14	2	1	STD					
	04	40300-E0902	ASSY-WHEEL ROAD 4 1/2-JX14	1	1	STD			Y	Y	40300-E0900
*	05	40300-78000	ASSY-WHEEL ROAD 4 1/2-JX13	2	1	VAN					
	06	40300-77400	ASSY-WHEEL ROAD 4 1/2-JX13	2	1	VAN			Y	Y	40300-78000
#	3401	40310-73002	SET-TIR & TUBE W/L 7.00-13-4PR	2		ALL STD		0969			
#	02	40312-77900	TIRE-TUBE LESS 7.00-13-4PR	2		OP SEDAN WAGON		0969			
#	03	40312-77902	TIRE-TUBE LESS 7.00-13-4PR	2		OP SEDAN WAGON		0969			
#	04	40312-77910	TIRE-TUBE LESS HIGH SPEED 7.00S-13-4PR	2		OP SEDAN WAGON		0969			
#	05	40312-77912	TIRE-TUBE LESS HIGH SPEED 7.00-13-4PR	2		OP SEDAN WAGON		0969			
#	06	40310-73022	SET-TIRE & TUBE W/L 7.00-13-6PR	2		OP R DRIVE SEDAN WAGON		0969			
#	07	40310-73008	SET-TIRE & TUBE SNOW 7.00-13-6PR	2		OP SEDAN EXC DIESEL WAGON		0969			

NOTE:

© 1972 NISSAN MOTOR CO., LTD.

PRINTED IN JAPAN

REAR AXLE & DRIVE SHAFT

S	KEY NO.	PART NO.	DESCRIPTION	Q'TY	UNIT PKG FOR DIST.	APPLIED MODEL	APPLIED DATE FROM	APPLIED DATE UP TO	ICA N	ICA F	SUPERSEDED
*	3408	- 40310-73012	SET-TIRE & TUBE HIGH SPEED 7.00-13-4PR	2		OP SEDAN EXC DIESEL WAGON		0969			
*	09	- 40310-73010	SET-TIRE & TUBE HIGH SPEED 7.00-13-4PR	2		OP SEDAN EXC DIESEL WAGON		0969			
*	10	- 40310-73000	SET-TIRE & TUBE 7.00-13-4PR	2		STANDARD L DRIVE					
*	11	- 40310-E0901	SET-TIRE & TUBE 6.40-14-4PR	2		DIESEL R DRIVE					
*	12	- 40310-E0902	SET-TIRE & TUBE 6.40-14-6PR	2		OP STANDARD R DRIVE					
*	13	- 40310-73202	SET-TIRE & TUBE W/L 6.00-13-8 PRLT	2		VAN-DX	1069				
*	14	- 40310-73208	SET-TIRE & TUBE SNOW 6.00-13-8 PRLT	2		OP VAN-DX	1069				
*	15	- 40310-73200	SET-TIRE & TUBE 6.00-13-6PR	2		OP VAN-DX	1069				
*	16	- 40312-E3203	TIRE-TUBE LESS 6.95-14-4PR	2		SEDAN EXC STANDARD	1069				
*	17	- 40312-E3213	TIRE-TUBE LESS 6.95S14-4PR	2		OP SEDAN EXC STANDARD WAGON	1069				
*	18	- 40310-E3208	TIRE-SNOW 6.95-14-4PR	2		OP SEDAN EXC STANDARD WAGON	1069				
*	19	- 40312-E3503	TIRE-TUBE LESS 6.95-14-6PR	2		WAGON	1069				
*	20	- 40310-E0901	SET-TIRE & TUBE 6.40-14-4PR	2		STANDARD	1069				

NOTE:

© 1972 NISSAN MOTOR CO., LTD.

REVISED: DECEMBER, 1972
PRINTED IN JAPAN

NOTE

Printed in Japan

NISSAN MOTOR CO., LTD.

REAR SUSPENSION (STRUT, SHOCK ABSORVER & TRANSVERSE LINK)

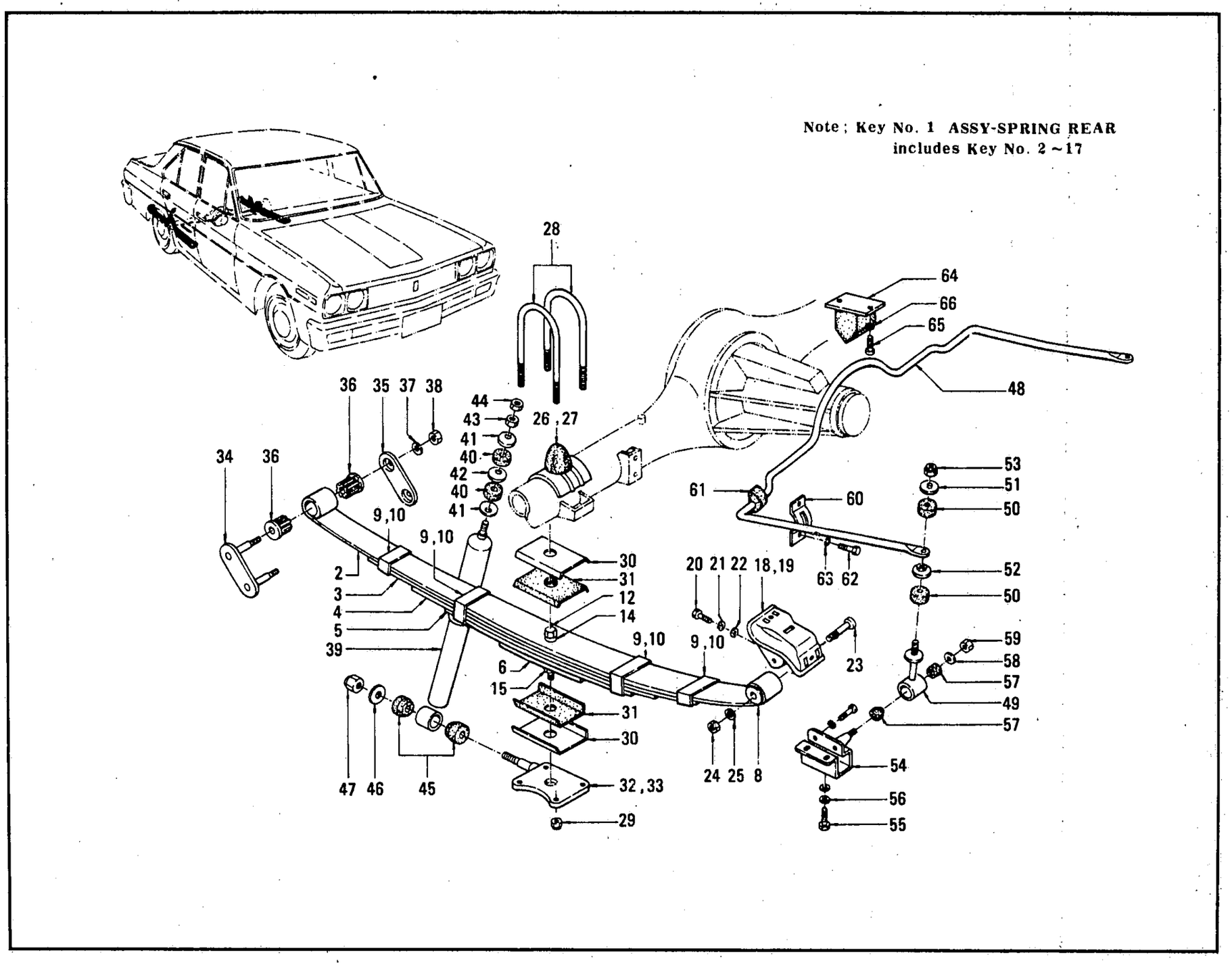

ILLUSTRATION **184**

© 1972 NISSAN MOTOR CO., LTD.

REVISED: DECEMBER, 1972

PRINTED IN JAPAN

REAR SUSPENSION (STRUT, SHOCK ABSORBER & TRANSVERSE LINK)

S	KEY NO.	PART NO.	DESCRIPTION	Q'TY	UNIT PKG FOR DIST.	APPLIED MODEL	APPLIED DATE FROM	APPLIED DATE UP TO	ICA N	ICA F	SUPERSEDED
	101	55020-73001	ASSY-SPRING REAR (5 LEAVES)	2	1	STD		0969			
	02	55020-73001	ASSY-SPRING REAR(5 LEAVES)	2	1	SUPER	1069				
	03	55020-73000	ASSY-SPRING REAR (5 LEAVES)	2	1	DELUXE SUPER					
	04	55020-73000	ASSY-SPRING REAR(5 LEAVES)	2	1	CUSTOM P-DX2000 P-DX2400 STD	1069				
	05	55020-E0801	ASSY-SPRING REAR RH (362 5KG)	1	1	OP DIESEL		0969	Y	Y	55020-78001
	06	55020-E0800	ASSY-SPRING REAR LH	1	1	OP DIESEL		0969	Y	Y	55020-70000
	07	55020-E0800	ASSY-SPRING REAR (340 KG)	2	1	DIESEL		0969	Y	Y	55020-78000
	08	55020-E3400	ASSY-SPRING REAR (FOR 70AH BATTERY)	1	1	DIESEL		0969			
	09	55020-E3400	ASSY-SPRING REAR RH (FOR 100AH BATTERY)	1	1	DIESEL		0969			
	10	55020-E0800	ASSY-SPRING REAR LH (FOR 100AH BATTERY)	1	1	DIESEL		0969			
	11	55020-E0801	ASSY-SPRING REAR	2	1	DIESEL		0969			
	12	55020-73300	ASSY-SPRING REAR (5 LEAVES)	2	1	WAGON					
	13	55020-73200	ASSY-SPRING REAR (5 LEAVES)	2	1	VAN VAN-DX					
	201	55021-73000	LEAF-REAR SPRING NO 1	2	1	SUPER DX		0969			
	02	55021-73000	LEAF-REAR SPRING NO.1	2	1	CUSTOM P-DX2000 P-DX2400 STD	1069				
	03	55021-73001	LEAF-REAR SPRING NO 1	2	1	STD					
	04	55021-73001	LEAF-REAR SPRING NO.1	2	1	SUPER	1069				
	05	55021-73300	LEAF-REAR SPRING NO 1	1	1	WAGON					
	06	55021-73200	LEAF-REAR SPRING NO 1	1	1	VAN VAN-DX					
	07	55021-E0800	LEAF-REAR SPRING NO 1	2	1	DIESEL		0969			

NOTE:

© 1972 NISSAN MOTOR CO., LTD.

PRINTED IN JAPAN

REAR SUSPENSION (STRUT, SHOCK ABSORBER & TRANSVERSE LINK)

S	KEY NO.	PART NO.	DESCRIPTION	QTY	UNIT PKG FOR DIST.	APPLIED MODEL	APPLIED DATE FROM	APPLIED DATE UP TO	ICA N	ICA F	SUPERSEDED
	208	55021-78001	LEAF-REAR SPRING RH NO 1	1	1	OP DIESEL		0969			
	09	55021-78000	LEAF-REAR SPRING LH NO 1	1	1	OP DIESEL		0969			
	10	55022-73000	LEAF-REAR SPRING NO 2	2	1	SUPER DX		0969			
	11	55022-73000	LEAF-REAR SPRING NO.2	2	1	CUSTOM P-DX2000 P-DX2400 STD	1069				
	301	55022-73001	LEAF-REAR SPRING NO 2	1	1	STD					
	02	55022-73001	LEAF-REAR SPRING NO.2	1	1	SUPER	1069				
	03	55022-73300	LEAF-REAR SPRING NO 2	2	1	WAGON					
	04	55022-73200	LEAF-REAR SPRING NO 2	2	1	VAN VAN-DX					
	05	55022-78000	LEAF-REAR SPRING NO 2	2	1	DIESEL	1069				
	06	55022-78001	LEAF-REAR SPRING RH NO 2	1	1	OP DIESEL		0969			
	07	55022-78000	LEAF-REAR SPRING LH NO 2	1	1	OP DIESEL		0969			
	401	55023-73000	LEAF-REAR SPRING NO 3	2	1	SUPER DX		0969			
	02	55023-73000	LEAF-REAR SPRING NO.3	2	1	CUSTOM P-DX2000 P-DX2400 STD	1069				
	03	55023-73001	LEAF-REAR SPRING NO 3	2	1	STD					
	04	55023-73001	LEAF-REAR SPRING NO.3	2	1	SUPER	1069				
	05	55023-73300	LEAF-REAR SPRING NO 3	2	1	WAGON					
	06	55023-73200	LEAF-REAR SPRING NO 3	2	1	VAN VAN-DX					
	07	55023-78000	LEAF-REAR SPRING NO 3	2	1	DIESEL	1069				
	08	55023-78001	LEAF-REAR SPRING RH NO 3	1	1	OP DIESEL		0969			
	09	55023-78000	LEAF-REAR SPRING LH NO 3	1	1	OP DIESEL		0969			
	501	55024-73000	LEAF-REAR SPRING NO 4	2	1	SUPER DX					
	02	55024-73000	LEAF-REAR SPRING NO.4	2	1	CUSTOM P-DX2000 P-DX2400 STD	1069				

NOTE:

© 1972 NISSAN MOTOR CO., LTD.

REVISED: DECEMBER, 1972
PRINTED IN JAPAN
C

REAR SUSPENSION (STRUT, SHOCK ABSORBER & TRANSVERSE LINK)

S	KEY NO.	PART NO.	DESCRIPTION	Q'TY	UNIT PKG FOR DIST.	APPLIED MODEL	APPLIED DATE FROM	APPLIED DATE UP TO	ICA N	ICA F	SUPERSEDED
	503	- 55024-73001	LEAF-REAR SPRING NO 4	2	1	STD					
	D4	- 55024-73001	LEAF-REAR SPRING NO.4	2	1	SUPER	1069				
	D5	- 55024-73300	LEAF-REAR SPRING NO 4	2	1	WAGON					
	D6	- 55024-73200	LEAF-REAR SPRING NO 4	2	1	VAN VAN-DX					
	D7	- 55024-78000	LEAF-REAR SPRING NO 4	2	1	DIESEL	1069				
	D8	- 55024-78001	LEAF-REAR SPRING RH NO 4	1	1	OP DIESEL		0969			
	D9	- 55024-78000	LEAF-REAR SPRING LH NO 4	1	1	OP DIESEL		0969			
	601	- 55025-73000	LEAF-REAR SPRING NO 5	2	1	SUPER DX					
	D2	- 55025-73000	LEAF-REAR SPRING NO.5	2	1	CUSTOM P-DX2000 P-DX2400 STD	1069				
	D3	- 55025-73001	LEAF-REAR SPRING NO 5	2	1	STD					
	D4	- 55025-73001	LEAF-REAR SPRING NO.5	2	1	SUPER	1069				
	D5	- 55025-73300	LEAF-REAR SPRING NO 5	2	1	WAGON					
	D6	- 55025-73200	LEAF-REAR SPRING NO 5	2	1	VAN VAN-DX					
	D7	- 55025-78000	LEAF-REAR SPRING NO 5	2	1	DIESEL	1069				
	D8	- 55025-78001	LEAF-REAR SPRING RH NO 5	1	1	OP DIESEL		0969			
	D9	- 55025-78000	LEAF-REAR SPRING LH NO 5	1	1	OP DIESEL		0969			
	701	- 55026-78001	LEAF-REAR SPRING RH NO 6	1		OP DIESEL		0969			
	D2	- 55026-78000	LEAF-REAR SPRING LH NO 6	1		OP DIESEL		0969			
	801	- 55045-73000	ASSY-BUSH REAR SPRING FRONT	2	1	ALL					
	901	- 55048-66000	CLIP-REBOUND	2	10	ALL(EXC W & V)					
	D2	- 55048-73300	CLIP-REBOUND	4	1	WAGON					
	D3	- 55048-73200	CLIP-REBOUND	2	1	VAN					

NOTE:

© 1972 NISSAN MOTOR CO., LTD.

PRINTED IN JAPAN

REAR SUSPENSION (STRUT, SHOCK ABSORBER & TRANSVERSE LINK)

S	KEY NO.	PART NO.	DESCRIPTION	Q'TY	UNIT PKG FOR DIST.	APPLIED MODEL	APPLIED DATE FROM	APPLIED DATE UP TO	ICA N	ICA F	SUPERSEDED
	10D1	55049-66000	CLIP-REBOUND	2	10	ALL EXC W & V					
	D2	55049-66000	CLIP-REBOUND	4	10	WAGON					
	D3	55049-73200	CLIP-REBOUND	2	1	VAN					
	11D1	55040-32200	BUTTON-THRUST	6	10	ALL EXC WAGON					
	D2	55040-32200	BUTTON-THRUST	12	10	WAGON					
	12D1	55057-73000	BOLT-CENTER	2	10	SEDAN EXC DIESEL					
	D2	55057-73300	BOLT-CENTER	2	10	WAGON					
	D3	55057-73210	BOLT-CENTER	2		VAN					
	D4	55057-78000	BOLT-CENTER	2	1	DP DIESEL					
	13D1	55056-66000	PIECE DISTANCE	2	10	ALL					
*	D2	55056-73010	PIECE-DISTANCE	2	5	ALL					
	14D1	00915-11510	WASHER-SPRING	1	50	ALL					
	15D1	00999-20410	NUT-HEXAGON	1	50	ALL					
	16D1	55052-39900	COLLAR-REBOUND CLIP	1		VAN					
	17D1	00999-20410	NUT-HEXAGON	1	50	VAN					
	18D1	55202-73001	ASSY-BRACKET REAR SPRING FRONT RH	1	1	ALL					
	19D1	55203-73001	ASSY-BRACKET REAR SPRING FRONT LH	1	1	ALL					
	20D1	00124-62510	BOLT TO ATTACH FRONT BRACKET	8	50	ALL					
	21D1	00915-11610	WASHER-LOCK TO ATTACH FRONT BRACKET	8	50	ALL					
	22D1	00915-41610	WASHER-PLAIN TO ATTACH FRONT BRACKET	8	50	ALL					
	23D1	55224-73001	PIN-REAR SPRING FRONT	2	10	ALL					

NOTE:

© 1972 NISSAN MOTOR CO., LTD.

REVISED: DECEMBER, 1972
PRINTED IN JAPAN
C

REAR SUSPENSION (STRUT, SHOCK ABSORBER & TRANSVERSE LINK)

S	KEY NO.	PART NO.	DESCRIPTION	Q'TY	UNIT PKG FOR DIST.	APPLIED MODEL	APPLIED DATE FROM	APPLIED DATE UP TO	ICA N	ICA F	SUPERSEDED
	2401	00911-24810	NUT	2	50	ALL					
	2501	00915-21810	WASHER-LOCK	2	50	ALL					
	2601	55240-73000	ASSY-BUMPER REAR AXLE RH	1	1	ALL					
	2701	55242-73000	ASSY-BUMPER REAR AXLE LH	1	1	ALL					
	2801	55247-36701	CLIP-REAR SPRING	4	1	SEDAN					
	D2	55247-36700	CLIP-REAR SPRING	4	1	WAGON					
	D3	55247-73200	CLIP-REAR SPRING	4	1	VAN VAN-DX					
	2901	00912-34710	NUT-SELF LOCKING	8	50	ALL					
	3001	55054-73000	PLATE-LOCATION REAR SPRING	4	1	ALL					
	3101	55243-73000	PAD-SEAT REAR SPRING	4	5	ALL		0969			
	D2	55243-E0800	PAD-SEAT REAR SPRING	4	5	ALL	1069				
	3201	55262-73000	ASSY-SEAT REAR SPRING RH	1	1	ALL					
	3301	55266-73000	ASSY-SEAT REAR SPRING LH	1	1	ALL					
	3401	55220-73000	ASSY-SHACKLE REAR SPRING	2	1	ALL					
	3501	55222-73000	SHACKLE-REAR SPRING	2	5	ALL					
*	3601	55046-73000	BUSH-REAR SPRING REAR (RUBBER)	8	50	ALL					
	D2	55046-P0101	BUSH-REAR SPRING REAR (RUBBER)	8	10	ALL			Y	N	55046-73000
	3701	00915-11710	WASHER-LOCK 7/16	4	50	ALL					
	3801	00911-24710	NUT 7/16-20	4	50	ALL					
	3901	56210-73026	ASSY-SHOCK ABSORBER REAR	2	1	ALL EXC VAN VAN-DX SD22-LD					
	D2	56210-73225	ASSY-SHOCK ABSORBER REAR	2	1	VAN VAN-DX					

NOTE:

© 1972 NISSAN MOTOR CO., LTD.

PRINTED IN JAPAN

REAR SUSPENSION (STRUT, SHOCK ABSORBER & TRANSVERSE LINK)

S	KEY NO.	PART NO.	DESCRIPTION	Q'TY	UNIT PKG FOR DIST.	APPLIED MODEL	APPLIED DATE FROM	APPLIED DATE UP TO	ICA N	ICA F	SUPERSEDED
*	3903	56210-77725	ASSY-SHOCK ABSORBER REAR	2	1	SD22-LD	1069		Y	N	56210-73026
*	D4	56210-77725-01	ASSY-SHOCK ABSORBER REAR	2	1	SD22-LD			Y	N	56210-77725
	4001	56112-21000	BUSHING-RUBBER SHOCK ABSORBER	4	10	ALL			Y	Y	56127-50000
	4101	56113-73000	WASHER-SPECIAL	4	10	ALL					
	4201	56114-73001	WASHER-SPECIAL INNER	2	10	ALL					
	4301	00911-14610	NUT 3/8-24	2	50	ALL					
	4401	00911-14610	NUT-LOCK 3/8-24	2	50	ALL			Y	Y	00911-34610
	4501	56119-32201	BUSH-RUBBER SHOCK ABSORBER MOUNTING	4	10	ALL					
	4601	56225-10601	WASHER-SPECIAL SHOCK ABSORBER MOUNTING	2	50	ALL					
	4701	00912-34710	NUT-LOCK 7/16-20	2	50	ALL					
	4801	56230-73001	BAR-TORSION REAR STABILIZER	1	1	SUPER CUSTOM DELUXE					
	4901	56260-73000	ASSY-ROD CONNECTING REAR STABILIZER	2	1	SUPER CUSTOM DELUXE					
	5001	56112-09400	BUSH-RUBBER	4	50	SUPER CUSTOM DELUXE					
	5101	56113-09400	WASHER-SPECIAL OUTER	2	50	SUPER CUSTOM DELUXE					
	5201	56114-09400	WASHER-SPECIAL INNER	2	50	SUPER CUSTOM DELUXE					
	5301	00912-34610	NUT-SELF LOCKING 3/8-24	2	50	SUPER CUSTOM DELUXE					
	5401	56227-73000	ASSY-BRACKET REAR STABILIZER FRAME SIDE	2	1	SUPER CUSTOM DELUXE					
	5501	00114-52010	BOLT 5/16-24	8	50	SUPER CUSTOM DELUXE					

NOTE:

© 1972 NISSAN MOTOR CO., LTD.

REVISED: DECEMBER, 1972
PRINTED IN JAPAN
C

REAR SUSPENSION (STRUT, SHOCK ABSORBER & TRANSVERSE LINK)

S	KEY NO.	PART NO.	DESCRIPTION	Q'TY	UNIT PKG FOR DIST.	APPLIED MODEL	APPLIED DATE FROM	APPLIED DATE UP TO	ICA N	ICA F	SUPERSEDED
	5601	00915-21510	WASHER-LOCK 5/16	8	50	SUPER CUSTOM DELUXE					
	5701	56119-32201	BUSH-RUBBER SHOCK ABSORBER MOUNTING	4	10	SUPER CUSTOM DELUXE					
	5801	56225-10601	WASHER-SPECIAL SHOCK ABSORBER MOUNTING	2	50	SUPER CUSTOM DELUXE					
	5901	00912-34710	NUT-SELF LOCKING 7/16-20	2	50	SUPER CUSTOM DELUXE					
	6001	54614-32200	BRACKET-MOUNTING REAR STABILIZER	2	1	SUPER CUSTOM DELUXE					
	6101	56243-73000	BUSH-REAR STABILIZER AXLE SIDE	2	5	SUPER CUSTOM DELUXE					
	6201	00114-51810	BOLT 5/16-24	4	50	SUPER CUSTOM DELUXE					
	6301	00915-11510	WASHER-LOCK 5/16	4	50	SUPER CUSTOM DELUXE					
	6401	55350-73000	ASSY-TORQUE ARRESTER REAR SPRING	1	1	ALL					
	6501	00114-51610	BOLT 5/16-24	2	50	ALL					
	6601	00915-21510	WASHER-LOCK 5/16-24	2	50	ALL					

NOTE:

C

PRINTED IN JAPAN

© 1972 NISSAN MOTOR CO., LTD.

NOTE

NISSAN MOTOR CO., LTD.

Printed in Japan

NOTE

Printed in Japan

NISSAN MOTOR CO., LTD.

PUB. No.: C-0020 VOL. 2

ILLUSTRATION No.: 185 through 190

A spare ILLUSTRATION No. in the future.

© 1972 NISSAN MOTOR CO., LTD.

Printed in Japan

BRAKE

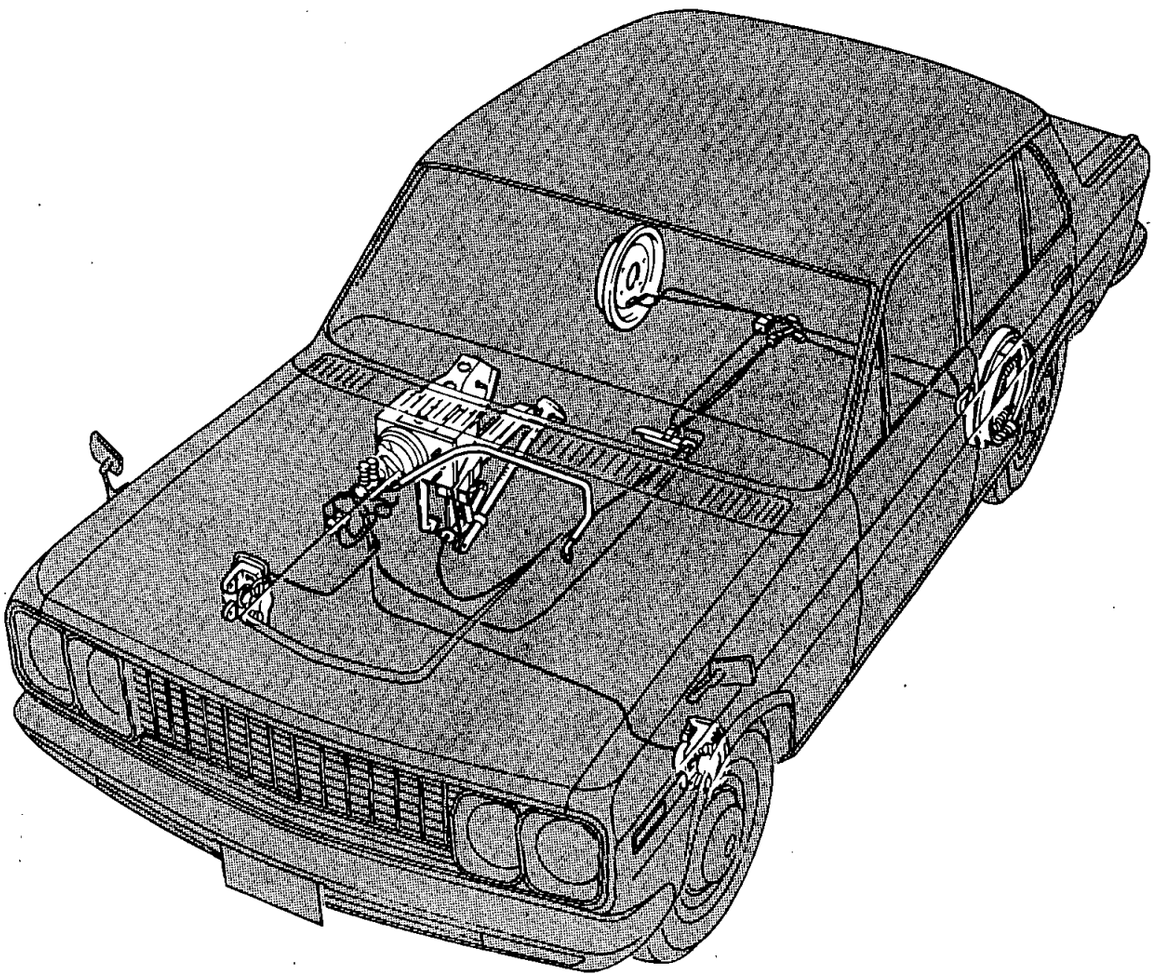

HOUSEKEEPING IS MERCHANDISING, TOO!

Cleanliness and pleasant atmosphere make for a good place to work and a good place to sell.

NOTE

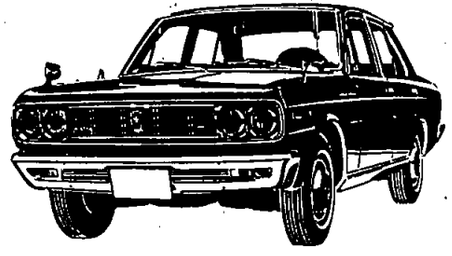

Printed in Japan

NISSAN MOTOR CO., LTD.

HAND BRAKE & HAND BRAKE CABLE (R DRIVE '69 YEAR MODEL)

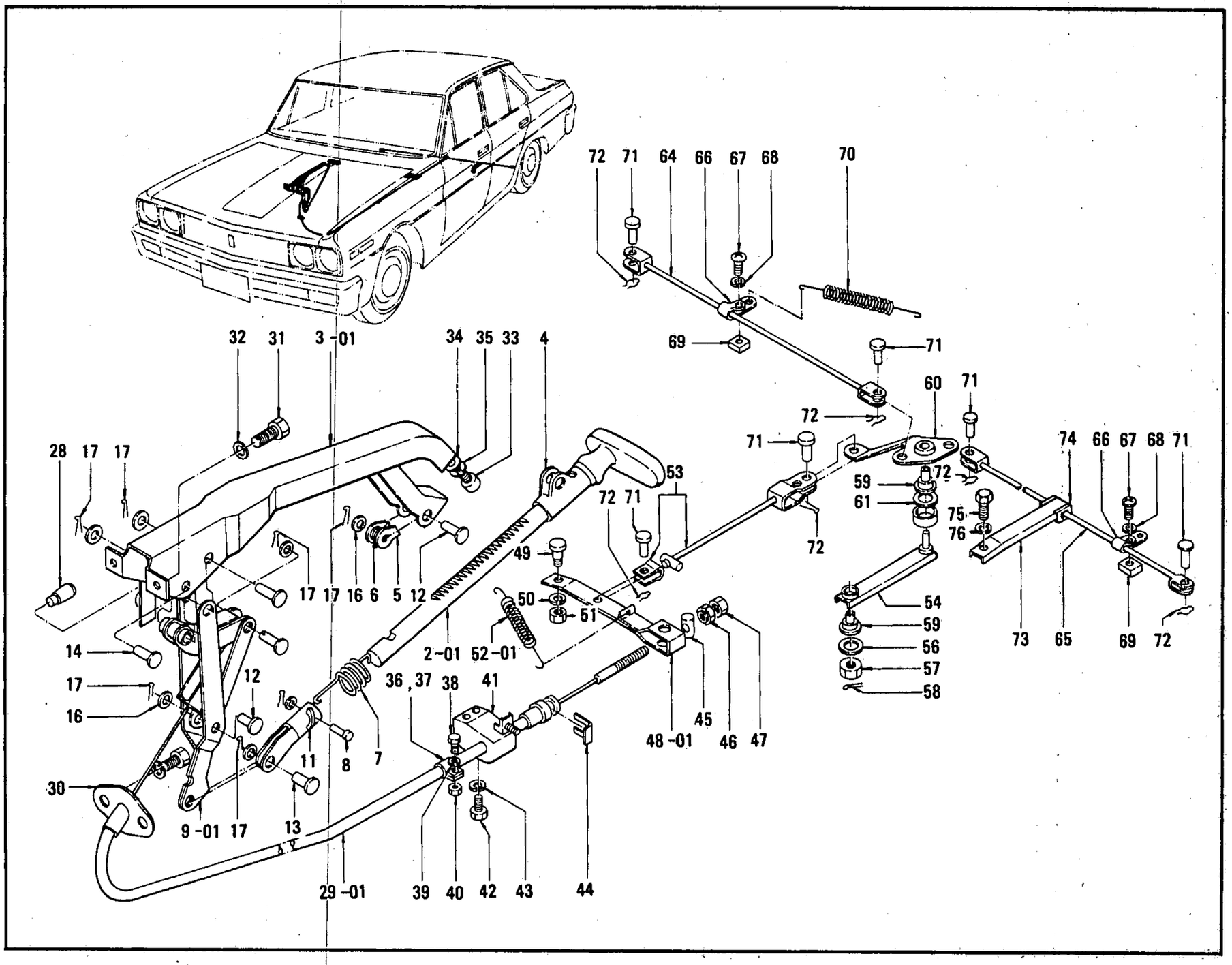

© 1972 NISSAN MOTOR CO., LTD.

ILLUSTRATION **191-1**

REVISED: DECEMBER, 1972

PRINTED IN JAPAN

HAND BRAKE & HAND BRAKE CABLE (R DRIVE '70 YEAR MODEL)

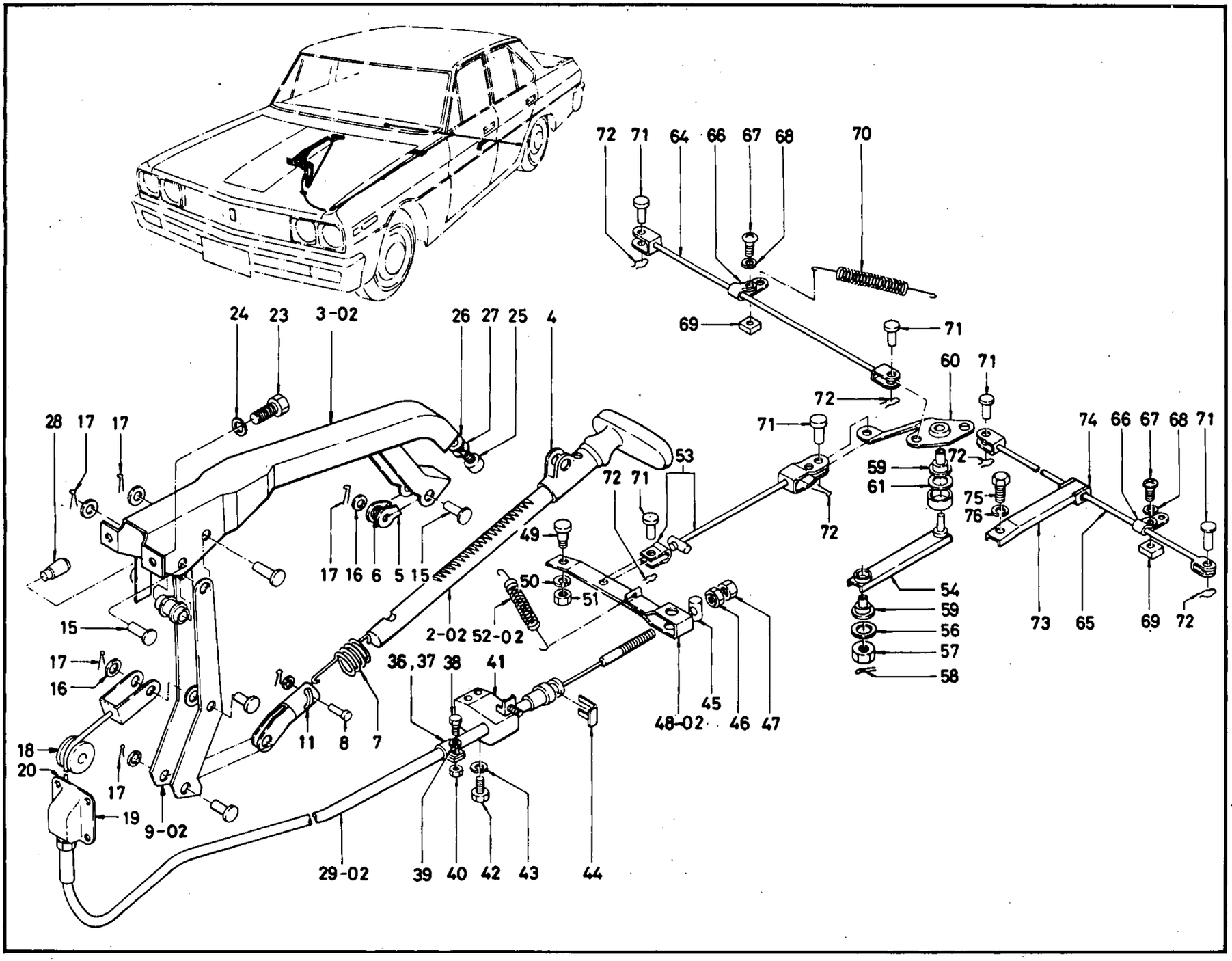

© 1972 NISSAN MOTOR CO., LTD.

PRINTED IN JAPAN

HAND BRAKE & HAND BRAKE CABLE (R DRIVE)

S	KEY NO.	PART NO.	DESCRIPTION	Q'TY	UNIT PKG FOR DIST.	APPLIED MODEL	APPLIED DATE FROM	APPLIED DATE UP TO	ICA N	ICA F	SUPERSEDED
	1D1	36010-E0106	ASSY-CONTROL HAND BRAKE	1	1	R DRIVE		0969			
	D2	36010-E3200	ASSY-CONTROL HAND BRAKE	1	1	R DRIVE	1069		N	N	36010-E0106
	2D1	36326-E0100	COMP-STEM HAND BRAKE CONTOROL	1	1	R DRIVE		0969			
	D2	36326-F0200	COMP-STEM HAND BRAKE CONTROL	1	1	R DRIVE	1069				
	3D1	36328-E0106	ASSY-BRACKET HAND BRAKE CONTROL	1	1	R DRIVE		0969	Y	Y	36328-E0105
	D2	36328-E3200	ASSY-BRACKET HAND BRAKE CONTOROL	1	1	R DRIVE	1069		N	N	36328-E0106
*	4D1	36335-21000	ASSY-GUIDE HAND BRAKE CONTOROL	1	1	R DRIVE					
	D2	36335-76000	ASSY-GUIDE HAND BRAKE CONTROL	1	5	R DRIVE			Y	N	36335-21000
	5D1	36320-21000	NAIL-RATCHET HAND BRAKE CONTOROL	1	10	R DRIVE					
*	6D1	36330-36700	SPRING-RATCHET NAIL	1	50	R DRIVE					
	D2	36330-76000	SPRING-RATCHET NAIL	1	10	R DRIVE			Y	N	36330-36700
	7D1	36337-10600	SPRING-SET HAND BRAKE CONTOROL	1	10	R DRIVE					
	8D1	36338-36700	PIN-SET SPRING	1	10	R DRIVE					
	9D1	36372-E0106	ASSY-LEVER	1	1	R DRIVE		0969			
	D2	36372-E3200	ASSY-LEVER	1	1	R DRIVE	1069		N	N	36372-E0106
	10D1	36363-E3200	CLEVIS-FRONT CABLE	1	5	R DRIVE	1069				
	11D1	36339-21000	YOKE-HAND BRAKE LEVER	1	5	R DRIVE					
	12D1	36377-10600	PIN-CLEVIS	2	2	R DRIVE					
	13D1	36378-10600	PIN-CLEVIS	1	10	R DRIVE					

NOTE:

© 1972 NISSAN MOTOR CO., LTD.

REVISED: DECEMBER, 1972
PRINTED IN JAPAN
C

HAND BRAKE & HAND BRAKE CABLE (R DRIVE)

S	KEY NO.	PART NO.	DESCRIPTION	Q'TY	UNIT PKG FOR DIST.	APPLIED MODEL	APPLIED DATE FROM	APPLIED DATE UP TO	ICA N	ICA F	SUPERSEDED
	14D1	36379-73000	PIN-CLEVIS	1	10	R DRIVE					
*	15D1	36374-E3200	PIN-CLEVIS	1	10	R DRIVE	1069				
	D2	36377-28500	PIN-CLEVIS	1	10	R DRIVE	1069		Y	Y	36374-E3200
	16D1	36373-36700	WASHER-NYLON	2	10	R DRIVE					
	17D1	46124-35100	SPRING-RETAINER	6	20	R DRIVE					
	18D1	36364-E3200	ROLLER-HAND BRAKE	1	5	R DRIVE	1069				
	19D1	36365-E3200	BRACKET-ROLLER HAND BRAKE	1	1	R DRIVE	1069				
	20D1	36366-E3200	PACKING-ROLLER BRACKET	1	5	R DRIVE	1069				
	21D1	00915-11510	WASHER-SPRING	1	50	R DRIVE	1069				
	22D1	00114-43010	BOLT-HEX 1/4-28	2	25	R DRIVE	1069				
	23D1	00369-41814	BOLT-HEX 1/4-28	4		R DRIVE	1069				
	24D1	00915-21410	WASHER-SPRING	2	50	R DRIVE	1069				
	25D1	00314-41642	SCREW	2	50	R DRIVE	1069				
	26D1	00915-41442	WASHER-PLAIN	2	50	R DRIVE	1069				
	27D1	00915-11442	WASHER-TOOTH LOCK	2		R DRIVE	1069				
	28D1	36011-89901	ASSY-SWITCH WARING LAMP	1	5	R DRIVE			Y	Y	36011-89901
	29D1	36402-E0106	ASSY-CABLE FRONT	1	5	R DRIVE		0969			
	D2	36402-E3200	ASSY-CABLE FRONT	1	1	R DRIVE	1069				
	30D1	36376-73000	PACKING-HAND BRAKE CABLE	1	10	R DRIVE		0969			
	31D1	00114-41410	BOLT	4	50	R DRIVE		0969			
	32D1	00915-21410	WASHER-LOCK	4	50	R DRIVE		0969			
	33D1	36385-73000	SCREW	2	10	R DRIVE		0969			
	34D1	36386-73000	WASHER-PLAIN	2	10	R DRIVE		0969			

NOTE:

© 1972 NISSAN MOTOR CO., LTD.

PRINTED IN JAPAN

HAND BRAKE & HAND BRAKE CABLE (R DRIVE)

S	KEY NO.	PART NO.	DESCRIPTION	Q'TY	UNIT PKG FOR DIST.	APPLIED MODEL	APPLIED DATE FROM	APPLIED DATE UP TO	ICA N	ICA F	SUPERSEDED
	3501	36387-73000	WASHER-TOOTH LOCK	2	10	R DRIVE		0969			
	3601	36407-73000	CLAMP-HAND BRAKE CABLE	1	10	R DRIVE					
	02	24210-89959	CLAMP-HAND BRAKE CABLE TO T/M CASE	1	5	R DRIVE	1069		N	N	36407-73000
	3701	36409-73000	CLAMP-HAND BRAKE CABLE	1	10	R DRIVE					
	3801	00369-01610	SCREW TO ATTACH CLAMP	1	50	R DRIVE					
	3901	00915-11010	WASHER TO ATTACH CLAMP	1	50	R DRIVE					
	4001	00911-14010	NUT TO ATTACH CLAMP	1	50	R DRIVE					
*	4101	36404-73001	RETAINER-FRONT CABLE	1	1	R DRIVE					
	02	36404-73002	RETAINER-FRONT CABLE	1	1	R DRIVE	1069		Y	N	36404-73001
	4201	00114-51610	BOLT TO ATTACH RETAINER	2	50	R DRIVE					
	4301	00915-11510	WASHER-LOCK TO ATTACH RETAINER	2	50	R DRIVE					
	4401	36406-32200	PLATE-LOCK FRONT CABLE	1	10	R DRIVE					
*	4501	36408-36700	PIN-TRUNNION FRONT CABLE	1	10	R DRIVE					
	02	30676-80700	PIN-TRUNNION FRONT CABLE	1	10	R DRIVE		0969	Y	N	36408-36700
	4601	36437-36700	NUT-ADJUSTING	1	10	R DRIVE					
	4701	00911-34410	NUT-LOCK	1	50	R DRIVE					
	4801	36510-E0100	ASSY-LEVER HAND BRAKE	1	1	R DRIVE		0969			
	02	36510-E3200	ASSY-LEVER HAND BRAKE	1	1	R DRIVE	1069		N	N	36510-E0100
	4901	36511-73000	PIN-FULECUM	1	10	R DRIVE					
	5001	00915-11510	WASHER-LOCK	1	50	R DRIVE					
	5101	00911-14510	NUT	1	50	R DRIVE					
	5201	36513-73000	SPRING-RETURN	1	5	R DRIVE		0969			

NOTE:

© 1972 NISSAN MOTOR CO., LTD.

REVISED: DECEMBER, 1972
PRINTED IN JAPAN

HAND BRAKE & HAND BRAKE CABLE (R DRIVE)

S	KEY NO.	PART NO.	DESCRIPTION	QTY	UNIT PKG FOR DIST.	APPLIED MODEL	APPLIED DATE FROM	APPLIED DATE UP TO	ICA N	ICA F	SUPERSEDED
	52D2	36513-E3200	SPRING-RETURN	1	10	R DRIVE	1009		N	N	36513-73000
	53D1	36451-73000	ASSY-CABLE HAND BRAKE REAR	1	5	R DRIVE					
	54D1	36525-73002	ASSY-ARM BRAKE BALANCE LEVER	1	1	R DRIVE					
	55D1	36527-22500	CUSHION-LEVER BALANCE	1	10	R DRIVE					
	56D1	00915-11610	WASHER-PLAIN	2	50	R DRIVE					
	57D1	00915-11610	WASHER-SPRING	2	50	R DRIVE					
	58D1	00921-22210	PIN-COTTER	2	50	R DRIVE					
	59D1	36517-73000	BUSH-BALANCE ARM	2	5	R DRIVE					
	60D1	36518-F0200	ASSY-LEVER BALANCE	1	1	R DRIVE			Y	Y	36518-73002
*	61D1	36528-22500	WASHER-PLAIN	1	10	R DRIVE					
	D2	01311-00051	WASHER-PLAIN	1	10	R DRIVE			Y	N	36528-22500
	62D1	00915-21410	WASHER-LOCK	1	50	R DRIVE					
	63D1	00911-14410	NUT	1	50	R DRIVE					
	64D1	36530-73000	ROD-CROSS SHORT	1	1	R DRIVE					
	65D1	36531-73000	ROD-CROSS LONG	1	1	R DRIVE					
*	66D1	36544-30000	BRACKET-HANGER RETURN SPRING	2	10	R DRIVE					
	D2	36544-U1400	BRACKET-HANGER RETURN SPRING	2	5	R DRIVE			Y	N	36544-30000
	67D1	00314-01010	SCREW TO ATTACH BRACKET	2	50	R DRIVE					
	68D1	00915-11010	WASHER-LOCK TO ATTACH BRACKET	2	50	R DRIVE					
	69D1	00913-14010	NUT TO ATTACH BRACKET	2	50	R DRIVE					
	70D1	36545-73000	SPRING-PULL OFF	2	10	R DRIVE					
*	71D1	36428-35000	PIN-CLEVIS	6	5	R DRIVE					

NOTE:

© 1972 NISSAN MOTOR CO., LTD.

PRINTED IN JAPAN

HAND BRAKE & HAND BRAKE CABLE (R DRIVE)

S	KEY NO.	PART NO.	DESCRIPTION	QTY	UNIT PKG FOR DIST.	APPLIED MODEL	APPLIED DATE FROM	APPLIED DATE UP TO	ICA N	ICA F	SUPERSEDED
	7102	- 36408-N1200	PIN-CLEVIS	6	10	R DRIVE			Y	N	36428-35000
	7201	- 00921-11810	PIN-CUTTER	6	50	R DRIVE					
	7301	- 36536-E0100	GUIDE-CROSS ROD	1	1	R DRIVE					
	7401	- 36537-E0100	GROMMET-RUBBER CROSS ROD	1	10	R DRIVE					
	7501	- 00114-51410	BOLT TO ATTACH GUIDE	1	50	R DRIVE					
	7601	- 00915-11510	WASHER-LOCK TO ATTACH GUIDE	1	50	R DRIVE					

NOTE:

ILLUSTRATION 191

© 1972 NISSAN MOTOR CO., LTD.

REVISED: DECEMBER, 1972

PRINTED IN JAPAN

C

NOTE

Printed in Japan

NISSAN MOTOR CO., LTD.

HAND BRAKE & HAND BRAKE CABLE (L DRIVE)

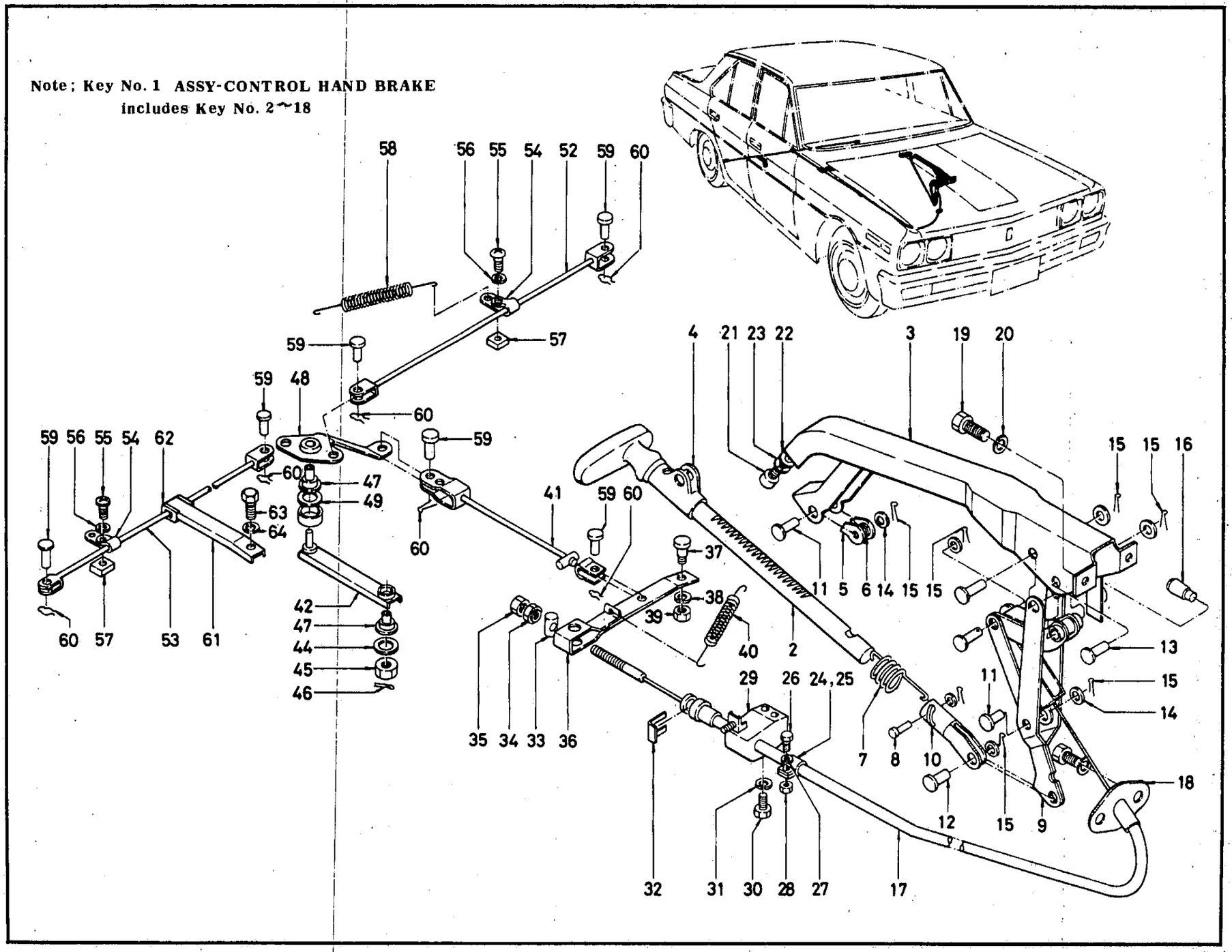

ILLUSTRATION **191A**

© 1972 NISSAN MOTOR CO., LTD.

REVISED: DECEMBER, 1972

PRINTED IN JAPAN

HAND BRAKE & HAND BRAKE CABLE (L DRIVE)

S	KEY NO.	PART NO.	DESCRIPTION	Q'TY	UNIT PKG FOR DIST.	APPLIED MODEL	APPLIED DATE FROM	APPLIED DATE UP TO	ICA N	ICA F	SUPERSEDED
	101	36010-E1206	ASSY-CONTROL HAND BRAKE	1	1	L DRIVE MANUAL					
	02	36010-E1208	ASSY-CONTROL HAND BRAKE	1	1	L DRIVE AUTO					
	201	36326-E1200	COMP-STEM HAND BRAKE CONTROL	1	1	L DRIVE					
	301	36328-E0106	ASSY-BRACKET HAND BRAKE CONTROL	1	1	L DRIVE					
*	401	36335-21000	ASSY-GUIDE HAND BRAKE CONTROL	1	1	L DRIVE					
	02	36335-76000	ASSY-GUIDE HAND BRAKE CONTROL	1	5	L DRIVE			Y	N	36335-21000
	501	36320-21000	NAIL-RATCHET HAND BRAKE CONTROL	1	10	L DRIVE					
*	601	36330-36700	SPRING-RATCHET NAIL	1	50	L DRIVE					
	02	36330-76000	SPRING-RATCHET NAIL	1	10	L DRIVE			Y	N	36330-36700
	701	36337-10800	SPRING-SET HAND BRAKE CONTROL	1	5	L DRIVE					
	801	36338-36700	PIN-SET SPRING	1	10	L DRIVE					
	901	36372-E0106	ASSY-LEVER	1	1	L DRIVE					
	1001	36339-21400	YOKE-HAND BRAKE UPPER	1	5	L DRIVE MANUAL					
	1101	36377-10600	PIN-CLEVIS	2	2	L DRIVE					
	1201	36378-10600	PIN-CLEVIS	1	10	L DRIVE					
	1301	36379-73000	PIN-CLEVIS	1	10	L DRIVE					
	1401	36373-36700	WASHER-NYLON	2	10	L DRIVE					
	1501	46124-35100	SPRING-RETAINER	6	20	L DRIVE					
	1601	36011-89901	ASSY-SWITCH WARING LAMP	1	5	L DRIVE			Y	Y	36011-89900
	1701	36402-E1206	ASSY-CABLE FRONT	1	5	L DRIVE MANUAL					

NOTE:

© 1972 NISSAN MOTOR CO., LTD.

PRINTED IN JAPAN

HAND BRAKE & HAND BRAKE CABLE (L DRIVE)

S	KEY NO.	PART NO.	DESCRIPTION	Q'TY	UNIT PKG FOR DIST.	APPLIED MODEL	APPLIED DATE FROM	APPLIED DATE UP TO	ICA N	ICA F	SUPERSEDED
	17D2	36402-E1208	ASSY-CABLE FRONT	1	5	L DRIVE AUTO					
	18D1	36376-73000	PACKING-HAND BRAKE CABLE	1	10	L DRIVE					
	19D1	00114-41410	BOLT	4	50	L DRIVE					
	20D1	00915-21410	WASHER-LOCK	4	50	L DRIVE					
	21D1	36385-73000	SCREW	2	10	L DRIVE					
	22D1	36386-73000	WASHER-PLAIN	2	10	L DRIVE					
	23D1	36387-73000	WASHER-TOOH LOCK	2	10	L DRIVE					
	24D1	36407-73000	CLAMP-HAND BRAKE CABLE	1	10	L DRIVE					
	25D1	36409-73000	CLAMP-HAND BRAKE CABLE	1	10	L DRIVE					
	26D1	00369-01610	SCREW TO ATTACH CLAMP	1	50	L DRIVE					
	27D1	00915-11010	WASHER TO ATTACH CLAMP	1	50	L DRIVE					
	28D1	00911-14010	NUT TO ATTACH CLAMP	1	50	L DRIVE					
*	29D1	36404-73001	RETAINER-FRONT CABLE	1	1	L DRIVE					
	D2	36404-73002	RETAINER-FRONT CABLE	1	1	L DRIVE			Y	N	36404-73001
	30D1	00114-51610	BOLT TO ATTACH RETAINER	2	50	L DRIVE					
	31D1	00915-11510	WASHER-LOCK TO ATTACH RETAINER	2	50	L DRIVE					
	32D1	36406-32200	PLATE-LOCK FRONT CABLE	1	10	L DRIVE					
*	33D1	36408-36700	PIN-TRUNNION FRONT CABLE	1	10	L DRIVE					
	D2	30676-B0700	PIN-TRUNNION FRONT CABLE	1	10	L DRIVE			Y	N	36408-36700
	34D1	36437-36700	NUT-ADJUSTING	1	10	L DRIVE					
	35D1	00911-34410	NUT-LOCK	1	50	L DRIVE					
	36D1	36510-E0100	ASSY-LEVER HAND BRAKE	1	1	L DRIVE		0969			

NOTE:

© 1972 NISSAN MOTOR CO., LTD.

REVISED: DECEMBER, 1972
PRINTED IN JAPAN

HAND BRAKE & HAND BRAKE CABLE (L DRIVE)

S	KEY NO.	PART NO.	DESCRIPTION	Q'TY	UNIT PKG FOR DIST.	APPLIED MODEL	APPLIED DATE FROM	APPLIED DATE UP TO	ICA N	ICA F	SUPERSEDED
	36D2	36510-E3200	ASSY-LEVER HAND BRAKE	1	1	L DRIVE	1009				
	37D1	36511-73000	PIN-FULECUM	1	10	L DRIVE					
	38D1	00915-11510	WASHER-LOCK	1	50	L DRIVE					
	39D1	00911-14510	NUT	1	50	L DRIVE					
	40D1	36513-73000	SPRING-RETURN	1	5	L DRIVE		0969			
	D2	36513-E3200	SPRING-RETURN	1	10	L DRIVE	1069				
	41D1	36451-73000	ASSY-CABLE HAND BRAKE REAR	1	5	L DRIVE					
	42D1	36525-73002	ASSY-ARM BRAKE BALANCE LEVER	1	1	L DRIVE					
	43D1	36527-22500	CUSHION-LEVER BALANCE	1	10	L DRIVE					
	44D1	00915-11610	WASHER-PLAIN	2	50	L DRIVE					
	45D1	00915-11610	WASHER-SPRING	2	50	L DRIVE					
	46D1	00921-22210	PIN-COTTER	2	50	L DRIVE					
	47D1	36517-73000	BUSH-BALANCE ARM	2	5	L DRIVE					
	48D1	36518-F0200	ASSY-LEVER BALANCE	1	1	L DRIVE			Y	Y	36518-73002
*	49D1	36528-22500	WASHER-PLAIN	1	10	L DRIVE					
	D2	01311-00051	WASHER-PLAIN	1	10	L DRIVE			Y	N	36528-22500
	50D1	00915-21410	WASHER-LOCK	1	50	L DRIVE					
	51D1	00911-14410	NUT	1	50	L DRIVE					
	52D1	36530-73000	ROD-CROSS SHORT	1	1	L DRIVE					
	53D1	36531-73000	ROD-CROSS LONG	1	1	L DRIVE					
*	54D1	36544-30000	BRACKET-HANGER RETURN SPRING	2	10	L DRIVE					
	D2	36544-U1400	BRACKET-HANGER RETURN SPRING	2	5	L DRIVE			Y	N	36544-30000
	55D1	00314-01010	SCREW TO ATTACH BRACKET	2	50	L DRIVE					

NOTE:

© 1972 NISSAN MOTOR CO., LTD.

PRINTED IN JAPAN

HAND BRAKE & HAND BRAKE CABLE (L DRIVE)

S	KEY NO.	PART NO.	DESCRIPTION	Q'TY	UNIT PKG FOR DIST.	APPLIED MODEL	APPLIED DATE FROM	APPLIED DATE UP TO	ICA N	ICA F	SUPERSEDED
	56D1	00915-11010	WASHER-LOCK TO ATTACH BRACKET	2	50	L DRIVE					
	57D1	00913-14010	NUT TO ATTACH BRACKET	2	50	L DRIVE					
	58D1	36545-73000	SPRING-PULL OFF	2	10	L DRIVE					
*	59D1	36428-35000	PIN-CLEVIS	6	5	L DRIVE					
	D2	36408-N1200	PIN-CLEVIS	6	10	L DRIVE			Y	N	36428-35000
	60D1	00921-11810	PIN-COTTER	6	50	L DRIVE					
	61D1	36536-E0100	GUIDE-CROSS ROD	1	1	L DRIVE					
	62D1	36537-E0100	GROMMET-RUBBER CROSS ROD	1	10	L DRIVE					
	63D1	00114-51410	BOLT TO ATTACH GUIDE	1	50	L DRIVE					
	64D1	00915-11510	WASHER-LOCK TO ATTACH GUIDE	1	50	L DRIVE					

NOTE:

© 1972 NISSAN MOTOR CO., LTD.

REVISED: DECEMBER, 1972
PRINTED IN JAPAN
C

NOTE

Printed in Japan

NISSAN MOTOR CO., LTD.

FRONT BRAKE & WHEEL CYLINDER (DISC TYPE)

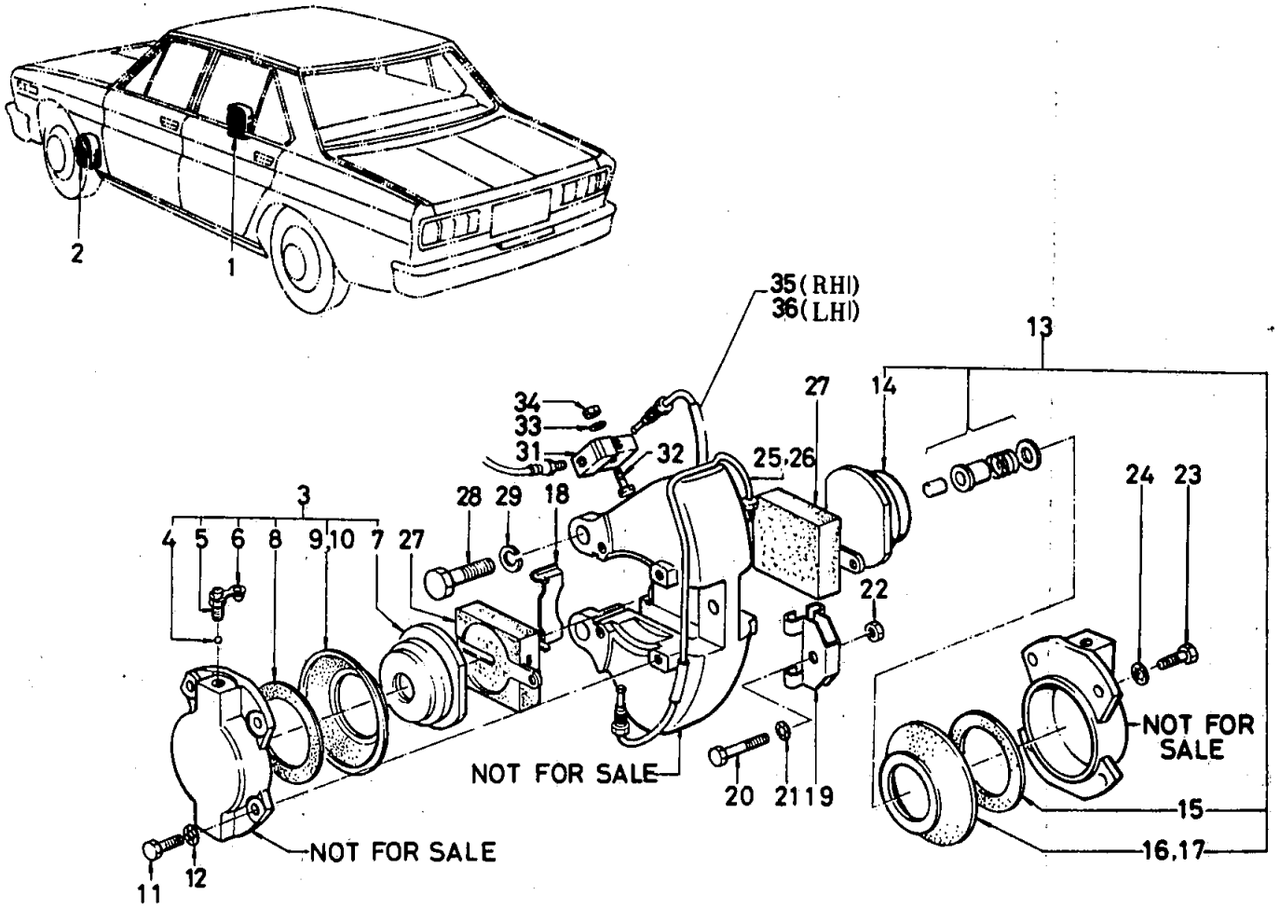

ILLUSTRATION **192**

© 1972 NISSAN MOTOR CO., LTD.

REVISED: DECEMBER, 1972

PRINTED IN JAPAN

C

FRONT BRAKE & WHEEL CYLINDER (DISC TYPE)

S	KEY NO.	PART NO.	DESCRIPTION	Q'TY	UNIT PKG FOR DIST.	APPLIED MODEL	APPLIED DATE FROM	APPLIED DATE UP TO	ICA N	ICA F	SUPERSEDED
	101	41000-73401	ASSY-CALIPAR FRONT BRAKE RH M33-S MK2TYPE	1		SUPER CUSTOM OP P-DX					
	201	41010-73401	ASSY-CALIPER FRONT BRAKE LH M33-S MK2TYPE	1		SUPER CUSTOM OP P-DX					
	301	41100-14600	ASSY-CYLINDER INNER	2	1	SUPER CUSTOM OP P-DX					
	401	41126-14600	BALL 13/16"	2	10	SUPER CUSTOM OP P-DX					
	501	41128-14600	SCREW-BLEEDER	2	10	SUPER CUSTOM OP P-DX					
	601	41129-30001	CAP-BLEEDER SCREW	2	10	SUPER CUSTOM OP P-DX					
	701	41120-14600	ASSY-PISTON	2	1	SUPER CUSTOM OP P-DX					
	801	41124-14600	PACKING-PISTON	2	10	SUPER CUSTOM OP P-DX					
*	901	41127-14600	COVER-DUST	2	10	SUPER CUSTOM OP P-DX					
	1001	41127-73400	COVER-DUST	2	10	SUPER CUSTOM OP P-DX			C	N	41127-14600
	1101	41218-14600	BOLT TO ATTACH INNER CYLINDER	8	10	SUPER CUSTOM OP P-DX					
	1201	41097-14600	WASHER TO ATTACH INNER CYLINDER	8	50	SUPER CUSTOM OP P-DX					
	1301	41101-14600	ASSY-CYLINDER OUTER	2	1	SUPER CUSTOM OP P-DX					
	1401	41120-14600	ASSY-PISTON	2	1	SUPER CUSTOM OP P-DX					
	1501	41124-14600	PACKING-PISTON	2	10	SUPER CUSTOM OP P-DX					

NOTE:

© 1972 NISSAN MOTOR CO., LTD.

PRINTED IN JAPAN

FRONT BRAKE & WHEEL CYLINDER (DISC TYPE)

S	KEY NO.	PART NO.	DESCRIPTION	Q'TY	UNIT PKG FOR DIST.	APPLIED MODEL	APPLIED DATE FROM	APPLIED DATE UP TO	ICA N	ICA F	SUPERSEDED
*	1601	41127-14600	COVER-DUST	2	10	SUPER CUSTOM OP P-DX					
	1701	41127-73400	COVER-DUST	2	10	SUPER CUSTOM OP P-DX			C	N	41127-14600
	1801	41214-14600	PLATE-SUPPORT	4	5	SUPER CUSTOM OP P-DX					
	1901	41071-14600	PLATE-KEEP	2	5	SUPER CUSTOM OP P-DX					
	2001	41217-14600	BOLT TO ATTACH KEEP PLATE	2	10	SUPER CUSTOM OP P-DX					
	2101	41057-14600	WASHER TO ATTACH KEEP PLATE	2	50	SUPER CUSTOM OP P-DX					
	2201	41049-14600	NUT TO ATTACH KEEP PLATE	2	10	SUPER CUSTOM OP P-DX					
	2301	41218-14600	BOLT TO ATTACH OUTER CYLINDER	8	10	SUPER CUSTOM OP P-DX					
	2401	41057-14600	WASHER TO ATTACH OUTER CYLINDER	8	50	SUPER CUSTOM OP P-DX					
	2501	41142-14600	ASSY-TUBE BRIDGE RH	1	5	SUPER CUSTOM OP P-DX					
	2601	41143-14600	ASSY-TUBE BRIDGE LH	1	5	SUPER CUSTOM OP P-DX					
	2701	41060-73401	ASSY-PAD FRONT BRAKE M33-S MK2TYPE	4	1	SUPER CUSTOM OP P-DX					
	02	41060-65002	ASSY-PAD FRONT BRAKE M33-S MK2TYPE	4	1	SUPER CUSTOM OP P-DX			Y	N	41060-73401
	2801	41004-73400	BOLT TO ATTACH CALIPER	2	10	SUPER CUSTOM OP P-DX					
	2901	41005-73400	BOLT TO ATTACH CALIPER & KNUCKLE ARM	2	10	SUPER CUSTOM OP P-DX					

NOTE:

© 1972 NISSAN MOTOR CO., LTD.

REVISED: DECEMBER, 1972
PRINTED IN JAPAN

FRONT BRAKE & WHEEL CYLINDER (DISC TYPE)

S	KEY NO.	PART NO.	DESCRIPTION	Q'TY	UNIT PKG FOR DIST.	APPLIED MODEL	APPLIED DATE FROM	APPLIED DATE UP TO	ICA N	ICA F	SUPERSEDED
	3001	00915-21810	WASHER-LOCK	4	50	SUPER CUSTOM OP P-DX					
	3101	41130-E0100	CONNECT-BRAKE HOSE FRONT	2	1	SUPER		0969			
	02	41130-E0101	CONNECT-BRAKE HOSE FRONT	2	1	SUPER CUSTOM OP P-DX	1069				
	3201	00111-53010	BOLT 5/16-18X25	2	50	SUPER CUSTOM OP P-DX					
	3301	00915-21510	WASHER-LOCK	2	50	SUPER CUSTOM OP P-DX					
	3401	00911-11510	NUT 5/16-18	2	50	SUPER CUSTOM OP P-DX					
*	3501	41140-E0100	ASSY-TUBE BRIDGE BRAKE RH	1	5	SUPER CUSTOM OP P-DX					
	02	41140-E0101	ASSY-TUBE BRIDGE BRAKE RH	1	5	SUPER CUSTOM OP P-DX			Y	N	41140-E0100
	03	41140-E3200	ASSY-TUBE BRIDGE BRAKE RH	1	5	SUPER CUSTOM OP P-DX			Y	Y	41140-E0100
*	3601	41141-E0100	ASSY-TUBE BRIDGE BRAKE LH	1	5	SUPER CUSTOM OP P-DX					
	02	41141-E0101	ASSY-TUBE BRIDGE BRAKE LH	1	50	SUPER CUSTOM OP P-DX			Y	N	41141-E0100
	03	41141-E3200	ASSY-TUBE BRIDGE BRAKE LH	1	5	SUPER CUSTOM OP P-DX			Y	Y	41141-E0100

NOTE:

© 1972 NISSAN MOTOR CO., LTD.

PRINTED IN JAPAN

NOTE

NOTE

Printed in Japan

NISSAN MOTOR CO., LTD.

FRONT BRAKE & WHEEL CYLINDER (1) (DRUM TYPE)

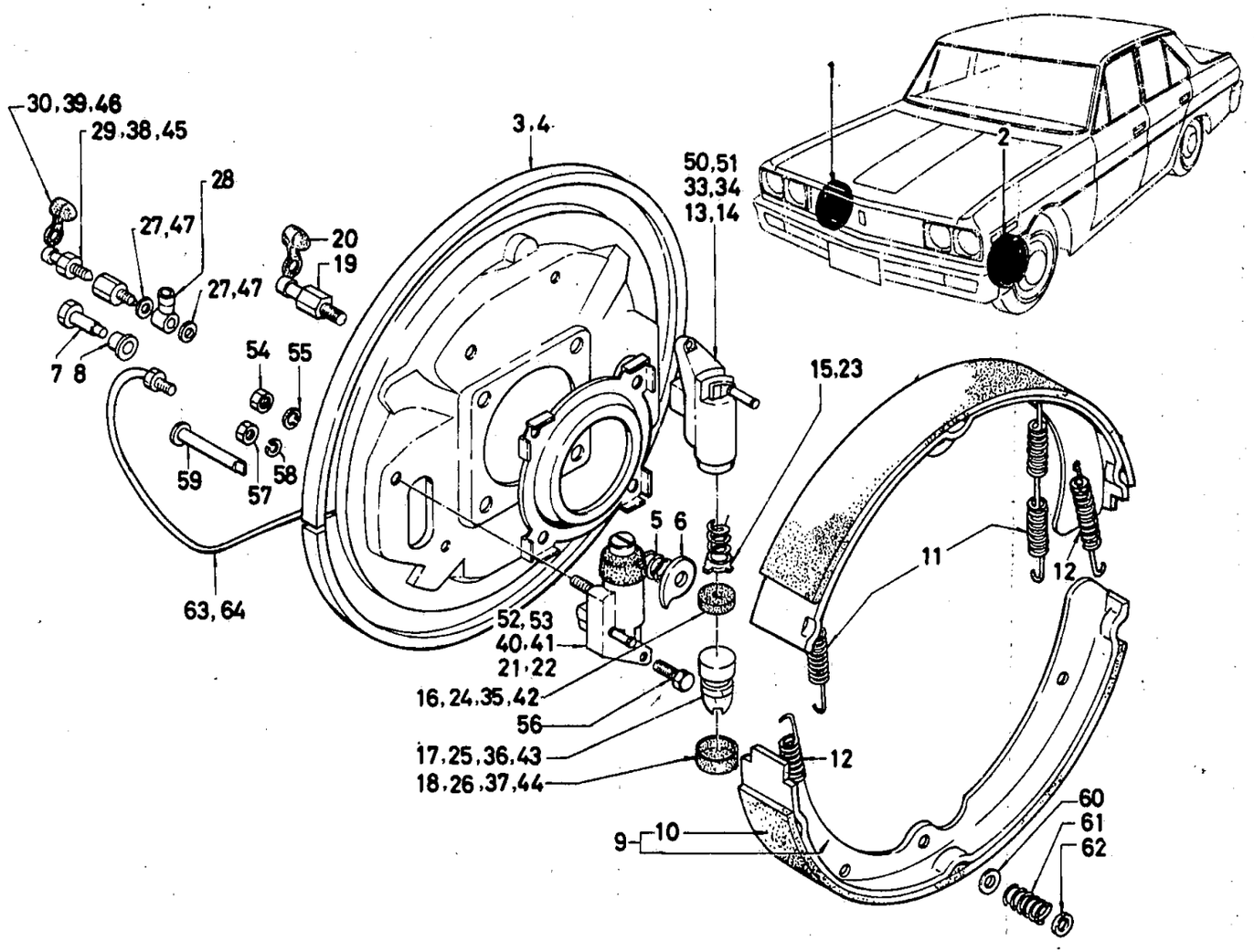

ILLUSTRATION **192A**

© 1972 NISSAN MOTOR CO., LTD.

REVISED: DECEMBER, 1972

PRINTED IN JAPAN

FRONT BRAKE & WHEEL CYLINDER (1) (DRUM TYPE)

S	KEY NO.	PART NO.	DESCRIPTION	Q'TY	UNIT PKG FOR DIST.	APPLIED MODEL	APPLIED DATE FROM	APPLIED DATE UP TO	ICA N	ICA F	SUPERSEDED
	101	41000-E0200	ASSY-BRAKE FRONT RH	1	1	SEDAN EXC SUPER		0969			
	02	41000-E1200	ASSY-BRAKE FRONT RH	1	1	SEDAN EXC SUPER CUSTOM	1069				
	201	41010-E0200	ASSY-BRAKE FRONT LH	1	1	SEDAN EXC SUPER		0969			
	02	41010-E1200	ASSY-BRAKE FRONT LH	1	1	SEDAN EXC SUPER CUSTOM	1069				
	301	41020-73000	ASSY-DISC FRONT BRAKE RH	1	1	SEDAN EXC SUPER CUSTOM					
	401	41030-73000	ASSY-DISC FRONT BRAKE LH	1	1	SEDAN EXC SUPER CUSTOM					
	501	41027-73000	SPRING-ADJUST CAM	4	10	SEDAN EXC SUPER CUSTOM					
	601	41028-73001	CAM-ADJUST FRONT BRAKE	4	10	SEDAN EXC SUPER CUSTOM					
	701	41029-73001	STUD-ADJUST CAM FRONT BRAKE	4	10	SEDAN EXC SUPER CUSTOM					
	801	41025-73001	SPACER-ADJUST CAM FRONT BRAKE	4	10	SEDAN EXC SUPER CUSTOM					
*	901	41060-78000	ASSY-SHOE FRONT BRAKE	4	4	SEDAN EXC SUPER		0969			
	02	41060-E3000	ASSY-SHOE FRONT BRAKE	4	1	SEDAN EXC SUPER			Y	N	41060-78000
*	03	41060-E3500	ASSY-SHOE FRONT BRAKE	4	4	SEDAN EXC SUPER CUSTOM	1069				
	1001	41066-78000	LINNING-BRAKE FRONT	4	4	SEDAN EXC SUPER		0969			
	02	41066-73000	LINNING-BRAKE FRONT	4	4	SEDAN EXC SUPER CUSTOM	1069				
*	1101	41090-73000	SPRING-RETURN FRONT BRAKE SHOE TOE	4	5	SEDAN EXC SUPER CUSTOM					
*	02	41090-P0525	SPRING-RETURN FRONT BRAKE SHOE TOE	4		SEDAN EXC SUPER CUSTOM			Y	N	41090-73000

NOTE:

© 1972 NISSAN MOTOR CO., LTD.

PRINTED IN JAPAN

FRONT BRAKE & WHEEL CYLINDER (1) (DRUM TYPE)

S	KEY NO.	PART NO.	DESCRIPTION	QTY	UNIT PKG FOR DIST.	APPLIED MODEL	APPLIED DATE FROM	APPLIED DATE UP TO	ICA N	ICA F	SUPERSEDED
*	1103	41090-P0500	SPRING-RETURN FRONT BRAKE SHOE TOE	4	5	SEDAN EXC SUPER CUSTOM			Y	N	41090-P0525
	1201	41091-73000	SPRING-RETURN FRONT BRAKE SHOE WHEEL	4	10	SEDAN EXC SUPER CUSTOM					
*	1301	41100-73001	ASSY-CYL FR WHEEL FORE RH (NABCU)	1	1	SEDAN EXC SUPER		0969			
	02	41100-E0200	ASSY-CYL.FR.WHEEL FORE RH (NABCD)	1	1	SEDAN EXC SUPER		0969	Y	N	41100-73001
*	1401	41102-73001	ASSY-CYL FR WHEEL FORE LH (NABCD)	1	1	SEDAN EXC SUPER		0969			
	02	41102-E0200	ASSY-CYL FR WHEEL FORE LH (NABCD)	1	1	SEDAN EXC SUPER		0969	Y	N	41102-73001
	1501	41116-73000	RETAINER-SPRING	2	10	SEDAN EXC SUPER		0969			
	1601	44112-12061	CUP-PISTON '69YEAR MODEL	2	20	SEDAN EXC SUPER		0969			
	1701	41110-73000	PISTON	2	2	SEDAN EXC SUPER		0969			
	1801	41123-10500	COVER-DUST	2	10	SEDAN EXC SUPER		0969			
	1901	41161-10600	SCREW-BLEEDER	2	10	SEDAN EXC SUPER		0969			
	2001	41129-30001	CAP-BLEEDER	2	10	SEDAN EXC SUPER		0969			
*	2101	41101-73001	ASSY-CYL FR WHEEL AFTER RH (NABCU)	1	1	SEDAN EXC SUPER		0969			
	02	41101-E0200	ASSY-CYL.FR.WHEEL RH(NABCD)	1	1	SEDAN EXC SUPER		0969	Y	N	41101-73001
*	2201	41103-73001	ASSY-CYL FR WHEEL AFTER LH (NABCU)	1	1	SEDAN EXC SUPER		0969			
	02	41103-E0200	ASSY-CYL FR WHEEL AFTER LH (NABCD)	1	1	SEDAN EXC SUPER		0969	Y	N	41103-73001
	2301	41116-73000	RETAINER-SPRING	2	10	SEDAN EXC SUPER		0969			
	2401	44112-12061	CUP-PISTON	2	20	SEDAN EXC SUPER		0969			

NOTE:

© 1972 NISSAN MOTOR CO., LTD.

REVISED: DECEMBER, 1972
PRINTED IN JAPAN
C

FRONT BRAKE & WHEEL CYLINDER (1) (DRUM TYPE)

S	KEY NO.	PART NO.	DESCRIPTION	Q'TY	UNIT PKG. FOR DIST.	APPLIED MODEL	APPLIED DATE FROM	APPLIED DATE UP TO	ICA N	ICA F	SUPERSEDED
	25D1	41110-73000	PISTON	2	2	SEDAN EXC SUPER		0969			
	26D1	41123-10500	COVER-DUST	2	10	SEDAN EXC SUPER		0969			
	27D1	41158-04100	PACKING	4	10	SEDAN EXC SUPER		0969			
	28D1	41130-08000	CONNECTOR	2	10	SEDAN EXC SUPER		0969			
	29D1	41128-30001	SCREW-BLEEDER	2	10	SEDAN EXC SUPER		0969			
	30D1	41129-30001	CAP-BLEEDER	2	10	SEDAN EXC SUPER		0969			
	31D1	41100-73025	KIT-'A' FR WHEEL CYL REPAIR (NABCO)	1	1	SEDAN EXC SUPER		0969			
	32D1	41100-73026	KIT-'B' FR WHEEL CYL REPAIR (NABCO)	1	1	SEDAN EXC SUPER		0969			
*	33D1	41100-73001	ASSY-CYLINDER FRONT WHEEL FOR RH	1	1	SEDAN EXC SUPER					
	D2	41100-E0200	ASSY-CYLINDER FRONT WHEEL FOR RH	1	1	SEDAN EXC SUPER		0969	Y	N	41100-73001
*	34D1	41102-73001	ASSY-CYLINDER FRONT WHEEL FORE LH	1	1	SEDAN EXC SUPER					
	D2	41102-E0200	ASSY-CYLINDER FRONT WHEEL FORE LH	1	1	SEDAN EXC SUPER		0969	Y	N	41102-73001
	35D1	44112-10610	CUP	2	20	SEDAN EXC SUPER					
	36D1	41122-73010	PISTON	2	5	SEDAN EXC SUPER					
	37D1	41123-10610	COVER-DUST	2	10	SEDAN EXC SUPER					
	38D1	41161-10610	SCREW-BLEEDER	2	5	SEDAN EXC SUPER					
	39D1	41129-30001	CAP-BLEEDER	2	10	SEDAN EXC SUPER					
*	40D1	41101-73001	ASSY-CYLINDER FRONT WHEEL AFTER RH (TOKICO)	1	1	SEDAN EXC SUPER					
	D2	41101-E0200	ASSY-CYLINDER FRONT WHEEL AFTER RH(TOKICO)	1	1	SEDAN EXC SUPER		0969	Y	N	41101-73001

NOTE:

PRINTED IN JAPAN

© 1972 NISSAN MOTOR CO., LTD.

FRONT BRAKE & WHEEL CYLINDER (1) (DRUM TYPE)

S	KEY NO.	PART NO.	DESCRIPTION	Q'TY	UNIT PKG FOR DIST.	APPLIED MODEL	APPLIED DATE FROM	APPLIED DATE UP TO	ICA N	ICA F	SUPERSEDED
*	4101	41103-73001	ASSY-CYLINDER FRONT WHEEL AFTER LH (TOKICO)	1	1	SEDAN EXC SUPER					
	02	41103-E0200	ASSY-CYLINDER FRONT WHEEL AFTER LH(TOKICO)	1	1	SEDAN EXC SUPER		0969	Y	N	41103-73001
	4201	44112-10610	CUP-PISTON	2	20	SEDAN EXC SUPER					
	4301	41122-73010	PISTON	2	5	SEDAN EXC SUPER					
	4401	41123-10610	COVER-DUST	2	10	SEDAN EXC SUPER					
	4501	41128-30001	SCREW-BLEEDER	2	10	SEDAN EXC SUPER					
	4601	41129-30001	CAP-BLEEDER	2	10	SEDAN EXC SUPER					
	4701	41158-04110	PACKING	4	10	SEDAN EXC SUPER					
	4801	41130-08010	UNION	2	5	SEDAN EXC SUPER					
	4901	41128-08010	BOLT-UNION	2	10	SEDAN EXC SUPER					
	5001	41100-E0200	ASSY-CYL FR WHEEL FORE RH	1	1	SEDAN EXC SUPER CUSTOM	1069				
	5101	41102-E0200	ASSY-CYL FR WHEEL FORE LH	1	1	SEDAN EXC SUPER CUSTOM	1069				
	5201	41101-E0200	ASSY-CYL FR WHEEL AFTER RH	1	1	SEDAN EXC SUPER CUSTOM	1069				
	5301	41103-E0200	ASSY-CYL FR WHEEL AFTER RH	1	1	SEDAN EXC SUPER CUSTOM	1069				
	5401	00911-14410	NUT 1/4-28	4	50	SEDAN EXC SUPER CUSTOM					
	5501	00915-11410	WASHER-LOCK 1/4	4	50	SEDAN EXC SUPER CUSTOM					
	5601	00124-52210	BOLT 5/16-24	4	50	SEDAN EXC SUPER CUSTOM					
	5701	00911-24510	NUT	4	50	SEDAN EXC SUPER CUSTOM					

NOTE:

© 1972 NISSAN MOTOR CO., LTD.

REVISED: DECEMBER, 1972
PRINTED IN JAPAN

FRONT BRAKE & WHEEL CYLINDER (1) (DRUM TYPE)

S	KEY NO.	PART NO.	DESCRIPTION	Q'TY	UNIT PKG FOR DIST.	APPLIED MODEL	APPLIED DATE FROM	APPLIED DATE UP TO	ICA N	ICA F	SUPERSEDED
	58D1	00915-11510	WASHER-LOCK	4	50	SEDAN EXC SUPER CUSTOM					
	59D1	41081-73000	PIN-ANTI SHOE RATTLER	4	10	SEDAN EXC SUPER CUSTOM					
	60D1	44082-32200	SEAT-ANTI SHOE RATTLER	4	50	SEDAN EXC SUPER CUSTOM					
*	61D1	41083-73000	SPRING-ANTI SHOE RATTLER	4	10	SEDAN EXC SUPER CUSTOM					
*	D2	41090-P0525	SPRING-ANTI SHOE RATTLER	4		SEDAN EXC SUPER CUSTOM			Y	N	41083-73000
	D3	41090-P0500	SPRING-ANTI SHOE RATTLER	4	5	SEDAN EXC SUPER CUSTOM			Y	N	41090-P0500
	62D1	44084-32201	RETAINER-SPRING ANTI RATTLER	4	50	SEDAN EXC SUPER CUSTOM					
*	63D1	41140-E0200	ASSY-TUBE BRIDGE FRONT RH	1	5	SEDAN EXC SUPER		0969			
	D2	41140-E0201	ASSY-TUBE BRIDGE FRONT RH	1	5	SEDAN EXC SUPER CUSTOM	1069				
*	64D1	41141-E0200	ASSY-TUBE BRIDGE FRONT LH	1	5	SEDAN EXC SUPER		0969			
	D2	41141-E0201	ASSY-TUBE BRIDGE FRONT LH	1	5	SEDAN EXC SUPER CUSTOM	1069				
	65D1	40242-73001	CATCHER-GREASE FRONT	2	1	SEDAN EXC SUPER CUSTOM					
*	66D1	46201-E0102	ASSY-HOSE BRAKE L=410	2	2	SEDAN EXC SUPER		0969			
	D2	46201-E0112	ASSY-HOSE BRAKE L=410	2	2	SEDAN EXC SUPER CUSTOM	1069				
*	67D1	46237-30000	GASKET-BRAKE HOSE	2	10	SEDAN EXC SUPER		0969			
	D2	46237-F0800	GASKET-BRAKE HOSE	2	10	SEDAN EXC SUPER CUSTOM	1069				
	68D1	46205-61000	PLATE-LOCK BRAKE HOSE	2	10	SEDAN EXC SUPER CUSTOM					

NOTE:

© 1972 NISSAN MOTOR CO., LTD.

PRINTED IN JAPAN

FRONT BRAKE & WHEEL CYLINDER (1) (DRUM TYPE)

S	KEY NO.	PART NO.	DESCRIPTION	Q'TY	UNIT PKG FOR DIST.	APPLIED MODEL	APPLIED DATE FROM	APPLIED DATE UP TO	ICA N	ICA F	SUPERSEDED
	6901	46206-18000	SPRING-LOCK BRAKE HOSE	2	5	SEDAN EXC SUPER CUSTOM					

NOTE:

© 1972 NISSAN MOTOR CO., LTD.

REVISED: DECEMBER, 1972

PRINTED IN JAPAN

C

NOTE

Printed in Japan

NISSAN MOTOR CO., LTD.

FRONT BRAKE & WHEEL CYLINDER (2) (DRUM TYPE)

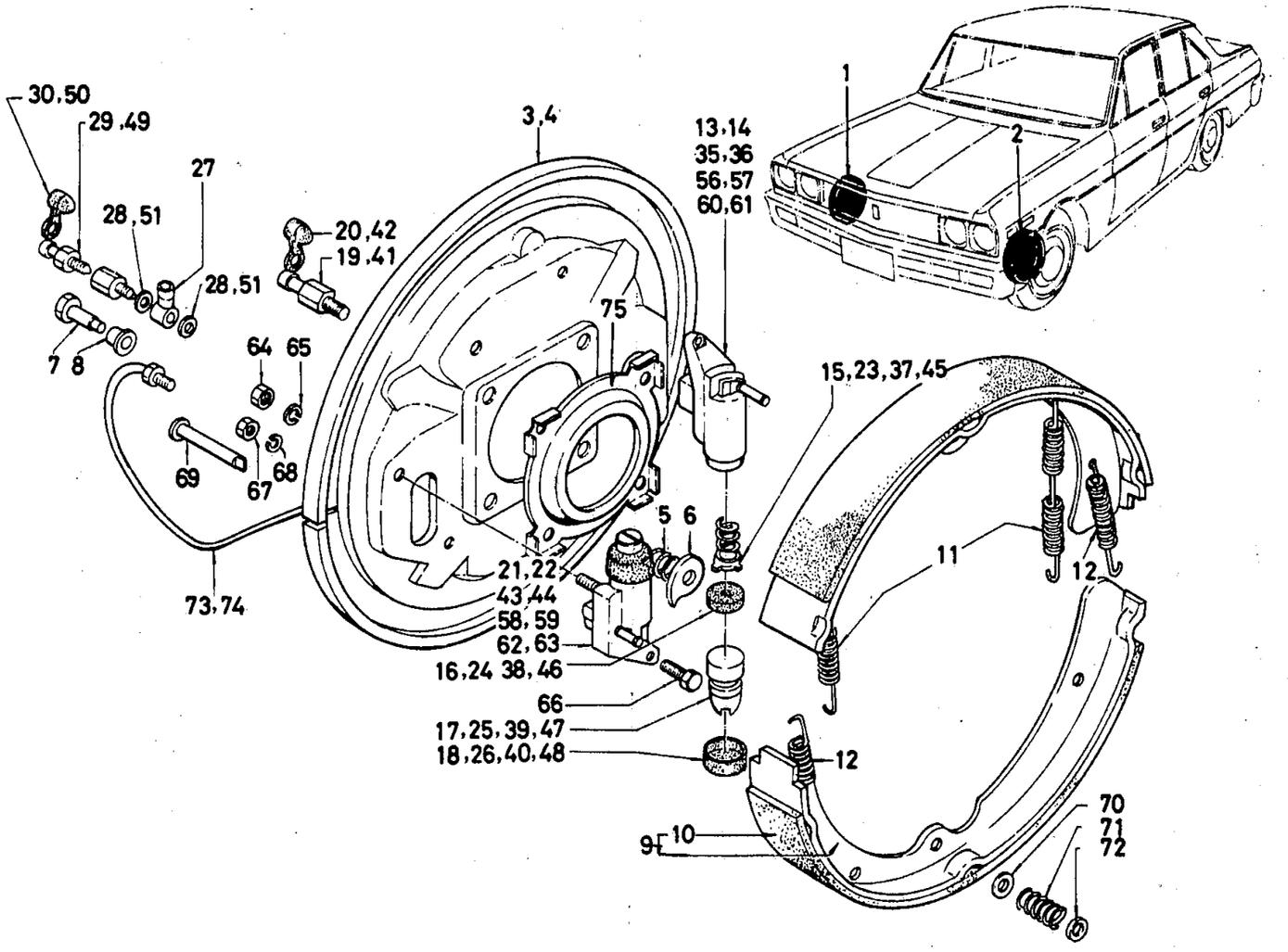

ILLUSTRATION **192B**

© 1972 NISSAN MOTOR CO., LTD.

REVISED: DECEMBER, 1972

PRINTED IN JAPAN

FRONT BRAKE & WHEEL CYLINDER (2) (DRUM TYPE)

S	KEY NO.	PART NO.	DESCRIPTION	Q'TY	UNIT PKG FOR DIST.	APPLIED MODEL	APPLIED DATE FROM	APPLIED DATE UP TO	ICA N	ICA F	SUPERSEDED
	1D1	41000-E0400	ASSY-BRAKE FRONT RH	1	1	WAGON & VAN		0969			
	D2	41000-E0400	ASSY-BRAKE FRONT RH	1	1	VAN-DX	1069				
	D3	41000-E1200	ASSY-BRAKE FRONT RH	1	1	WAGON	1069				
	2D1	41010-E0400	ASSY-BRAKE FRONT LH	1	1	WAGON & VAN		0969			
	D2	41010-E0400	ASSY-BRAKE FRONT LH	1	1	VAN-DX	1069				
	D3	41010-E1200	ASSY-BRAKE FRONT LH	1	1	WAGON	1069				
	3D1	41020-73000	ASSY-DISC FRONT BRAKE RH	1	1	WAGON & VAN					
	4D1	41030-73000	ASSY-DISC FRONT BRAKE LH	1	1	WAGON & VAN					
	5D1	41027-73000	SPRING-ADJUST CAM	4	10	WAGON & VAN					
	6D1	41028-73001	CAM-ADJUST FRONT BRAKE	4	10	WAGON & VAN					
	7D1	41029-73001	STUD-ADJUST CAM FRONT BRAKE	4	10	WAGON & VAN					
	8D1	41025-73001	SPACER-ADJUST CAM FRONT BRAKE	4	10	WAGON & VAN					
*	9D1	41060-78000	ASSY-SHOE FRONT BRAKE	4	4	WAGON & VAN		0969			
	D2	41060-E3000	ASSY-SHOE FRONT BRAKE	4	1	WAGON & VAN			Y	N	41060-78000
*	D3	41060-E3500	ASSY-SHOE FRONT BRAKE	4	4	WAGON & VAN-DX	1069				
	10D1	41066-78000	LINNING-BRAKE FRONT	4	4	WAGON & VAN		0969			
	D2	41066-73000	LINNING-BRAKE FRONT	4	4	WAGON & VAN-DX	1069				
*	11D1	41090-73000	SPRING-RETURN FRONT BRAKE SHOE TOE	4	5	WAGON & VAN					
*	D2	41090-P0525	SPRING-RETURN FRONT BRAKE SHOE TOE	4		WAGON & VAN			Y	N	41090-73000
	D3	41090-P0500	SPRING-RETURN FRONT BRAKE SHOE TOE	4	5	WAGON & VAN			Y	N	41090-P0525
	12D1	41091-73000	SPRING-RETURN FRONT BRAKE SHOE WHEEL	4	10	WAGON & VAN					

NOTE:

© 1972 NISSAN MOTOR CO., LTD.

PRINTED IN JAPAN

FRONT BRAKE & WHEEL CYLINDER (2) (DRUM TYPE)

S	KEY NO.	PART NO.	DESCRIPTION	Q'TY	UNIT PKG FOR DIST.	APPLIED MODEL	APPLIED DATE FROM	APPLIED DATE UP TO	ICA N	ICA F	SUPERSEDED
*	1301	41100-73201	ASSY-CYL FR WHEEL FORE RH (NABCU)	1	1	WAGON & VAN					
	D2	41100-E0400	ASSY-CYL.FR.WHEEL FORE RH (NABCU)	1	1	WAGON & VAN		0969	Y	N	41100-73201
*	1401	41102-73201	ASSY-CYL FR WHEEL FORE LH (NABCU)	1	1	WAGON & VAN					
	D2	41102-E0400	ASSY-CYL FR WHEEL FORE LH (NABCU)	1	1	WAGON & VAN	1069		Y	N	41102-73201
	1501	41116-71400	RETAINER-SPRING	2	10	WAGON & VAN					
	1601	41112-73201	CUP-PISTON	2	20	WAGON & VAN					
	1701	41110-73201	PISTON	2	5	WAGON & VAN					
	1801	41123-10500	COVER-DUST	2	10	WAGON & VAN					
	1901	41161-10600	SCREW-BLEEDER	2	10	WAGON & VAN					
	2001	41129-30001	CAP-BLEEDER	2	10	WAGON & VAN					
*	2101	41101-73201	ASSY-CYL FR WHEEL AFTER RH (NABCU)	1	1	WAGON & VAN					
	D2	41101-E0400	ASSY-CYL FR WHEEL AFTER RH (NABCU)	1	1	WAGON & VAN			Y	N	41101-73201
*	2201	41103-73201	ASSY-CYL FR WHEEL AFTER LH (NABCU)	1	1	WAGON & VAN					
	D2	41103-E0400	ASSY-CYL FR WHEEL AFTER LH (NABCU)	1	1	WAGON & VAN		0969	Y	N	41137-3201
	2301	41116-71400	RETAINER-SPRING	2	10	WAGON & VAN					
	2401	41112-73201	CUP-PISTON	2	20	WAGON & VAN					
	2501	41110-73201	PISTON	2	5	WAGON & VAN					
	2601	41123-10500	COVER-DUST	2	10	WAGON & VAN					
	2701	41130-08000	CONNECTOR	2	10	WAGON & VAN					

NOTE:

© 1972 NISSAN MOTOR CO., LTD.

REVISED: DECEMBER, 1972
PRINTED IN JAPAN

FRONT BRAKE & WHEEL CYLINDER (2) (DRUM TYPE)

S	KEY NO.	PART NO.	DESCRIPTION	Q'TY	UNIT PKG FOR DIST.	APPLIED MODEL	APPLIED DATE FROM	APPLIED DATE UP TO	ICA N	ICA F	SUPERSEDED
	28D1	41158-04100	PACKING	4	10	WAGON & VAN					
	29D1	41128-30001	SCREW-BLEEDER	2	10	WAGON & VAN					
	30D1	41129-30001	CAP-BLEEDER	2	10	WAGON & VAN					
	31D1	41100-73225	KIT-'A' FRONT WHEEL CYLINDER REPAIR(NABCO)	1	1	WAGON & VAN		0969			
	32D1	41100-73226	KIT-'B' FRONT WHEEL CYLINDER REPAIR(NABCO)	1	1	WAGON & VAN		0969			
	33D1	41100-10627	KIT-'A' FRONT WHEEL CYLINDER REPAIR(TOKICO)	1	1	WAGON & VAN					
	34D1	41100-73028	KIT-'B' FRONT WHEEL CYLINDER REPAIR(TOKICO)	1	1	WAGON & VAN					
*	35D1	41100-73201	ASSY-CYLINDER FRONT WHEEL FORE RH (TOKICO)	1	1	WAGON & VAN		0969			
	D2	41100-E0400	ASSY-CYLINDER FRONT WHEEL FORE RH(TOKICO)	1	1	L DRIVE		0969	Y	N	41100-73201
*	36D1	41102-73201	ASSY-CYLINDER FRONT WHEEL FORE LH (TOKICO)	1	1	WAGON & VAN		0969			
	D2	41102-E0400	ASSY-CYLINDER FRONT WHEEL FORE LH(TOKICO)	1	1	WAGON & VAN		0969	Y	N	41102-73201
	37D1	41116-73000	SEAT-SPRING	2	10	WAGON & VAN					
	38D1	44112-42100	CUP-PISTON	2	20	WAGON & VAN					
	39D1	41122-73210	PISTON	2	5	WAGON & VAN					
	40D1	41123-10610	COVER-DUST	2	10	WAGON & VAN					
	41D1	41161-10610	SCREW-BLEEDER	2	5	WAGON & VAN					
	42D1	41129-30001	CAP-BLEEDER	2	10	WAGON & VAN					
*	43D1	41101-73201	ASSY-CYL FRONT WHEEL AFTER RH (TOKICO)	1	1	WAGON & VAN		0969			

NOTE:

© 1972 NISSAN MOTOR CO., LTD.

PRINTED IN JAPAN

FRONT BRAKE & WHEEL CYLINDER (2) (DRUM TYPE)

S	KEY NO.	PART NO.	DESCRIPTION	QTY	UNIT PKG FOR DIST.	APPLIED MODEL	APPLIED DATE FROM	APPLIED DATE UP TO	ICA N	ICA F	SUPERSEDED
	4302	41101-E0400	ASSY-CYL FRONT WHEEL AFTER RH(TOKICO)	1	1	WAGON & VAN		0969	Y	N	41101-73201
*	4401	41103-73201	ASSY-CYL FRONT WHEEL AFTER L H (TOKIKO)	1	1	WAGON & VAN					
	D2	41103-E0400	ASSY-CYL FRONT WHEEL AFTER LH(TOKICO)	1	1	WAGON & VAN			Y	N	41103-73201
	4501	41116-73210	SEAT-SPRING	2		WAGON & VAN					
	4601	44112-42100	CUP-PISTON	2	20	WAGON & VAN					
	4701	41122-73210	PISTON	2	5	WAGON & VAN					
	4801	41123-10610	COVER-DUST	2	10	WAGON & VAN					
	4901	41128-30001	SCREW-BLEEDER	2	10	WAGON & VAN					
	5001	41129-30001	CAP-BLEEDER	2	10	WAGON & VAN					
	5101	41158-04110	PACKING	4	10	WAGON & VAN					
	5201	41130-08010	UNION	2	5	WAGON & VAN					
	5301	41128-08010	BOLT-UNION	2	10	WAGON & VAN					
	5401	41100-73227	KIT-'A' FRONT WHEEL CYLINDER REPAIR(TOKICO)	1	1	WAGON & VAN		0969			
	5501	41100-73228	KIT-'B' FRONT WHEEL CYLINDER REPAIR(TOKICO)	1	1	WAGON & VAN		0969			
	5601	41100-E0400	ASSY-CYLINDER FRONT WHEEL FORE RH	1	1	VAN-DELUXE	1069				
	5701	41102-E0400	ASSY-CYLINDER FRONT WHEEL FORE LH	1	1	VAN-DELUXE	1069				
	5801	41101-E0400	ASSY-CYLINDER FRONT WHEEL AFTER RH	1	1	VAN-DELUXE	1069				
	5901	41103-E0400	ASSY-CYLINDER FRONT WHEEL AFTER LH	1	1	VAN-DELUXE	1069				

NOTE:

© 1972 NISSAN MOTOR CO., LTD.

REVISED: DECEMBER, 1972
PRINTED IN JAPAN

FRONT BRAKE & WHEEL CYLINDER (2) (DRUM TYPE)

S	KEY NO.	PART NO.	DESCRIPTION	Q'TY	UNIT PKG FOR DIST.	APPLIED MODEL	APPLIED DATE FROM	APPLIED DATE UP TO	ICA N	ICA F	SUPERSEDED
	60D1	41100-E0200	ASSY-CYLINDER FRONT WHEEL FORE RH	1	1	WAGON	1069				
	61D1	41102-E0200	ASSY-CYLINDER FRONT WHEEL FORE LH	1	1	WAGON	1069				
	62D1	41101-E0200	ASSY-CYLINDER FRONT WHEEL AFTER RH	1	1	WAGON	1069				
	63D1	41103-E0200	ASSY-CYLINDER FRONT WHEEL AFTER LH	1	1	WAGON	1069				
	64D1	00911-14410	NUT 1/4-28	4	50	WAGON & VAN					
	65D1	00915-11410	WASHER-LOCK 1/4	4	50	WAGON & VAN					
	66D1	00124-52210	BOLT 5/16-24	4	50	WAGON & VAN					
	67D1	00911-24510	NUT 5/16	4	50	WAGON & VAN					
	68D1	00915-11510	WASHER-LOCK 5/16	4	50	WAGON & VAN					
	69D1	41081-73000	PIN-ANTI SHOE RATTLER	4	10	WAGON & VAN					
	70D1	44082-32200	SEAT-ANTI SHOE RATTLER	4	50	WAGON & VAN					
*	71D1	41083-73000	SPRING-ANTI SHOE RATTLER	4	10	WAGON & VAN					
*	D2	41090-P0525	SPRING-ANTI SHOE RATTLER	4		WAGON & VAN			Y	N	41083-73000
	D3	41090-P0500	SPRING-ANTI SHOE RATTLER	4	5	WAGON & VAN			Y	N	41090-P0525
	72D1	44084-32201	RETAINER-SPRING ANTI RATTLER	4	50	WAGON & VAN					
*	73D1	41140-E0200	ASSY-TUBE BRIDGE FRONT RH	1	5	WAGON & VAN		0969			
	D2	41140-E0201	ASSY-TUBE BRIDGE FRONT RH	1	5	WAGON & VAN-DX	1069				
*	74D1	41141-E0200	ASSY-TUBE BRIDGE FRONT LH	1	5	WAGON & VAN		0969			
	D2	41141-E0201	ASSY-TUBE BRIDGE FRONT LH	1	5	WAGON & VAN-DX	1069				
	75D1	40242-73001	CATCHER-GREASE FRONT	2	1	WAGON & VAN					
*	76D1	46201-E0102	ASSY-HOSE BRAKE L=410	2	2	WAGON & VAN		0969			

NOTE:

© 1972 NISSAN MOTOR CO., LTD.

PRINTED IN JAPAN

FRONT BRAKE & WHEEL CYLINDER (2) (DRUM TYPE)

S	KEY NO.	PART NO.	DESCRIPTION	Q'TY	UNIT PKG FOR DIST.	APPLIED MODEL	APPLIED DATE FROM	APPLIED DATE UP TO	ICA N	ICA F	SUPERSEDED
	7602	► 46201-E0112	ASSY-HOSE BRAKE L=410	2	2	WAGON & VAN-DX	1069				
*	77D1	► 46237-30000	GASKET-BRAKE HOSE	2	10	WAGON & VAN					
	D2	► 46237-F0800	GASKET-BRAKE HOSE	2	10	WAGON & VAN-DX		0969			
	78D1	► 46205-61000	PLATE-LOCK BRAKE HOSE	2	10	WAGON & VAN					
	7901	► 46206-18000	SPRING-LOCK BRAKE HOSE	2	5	WAGON & VAN					

NOTE:

© 1972 NISSAN MOTOR CO., LTD.

REVISED: DECEMBER, 1972
PRINTED IN JAPAN
C

NOTE

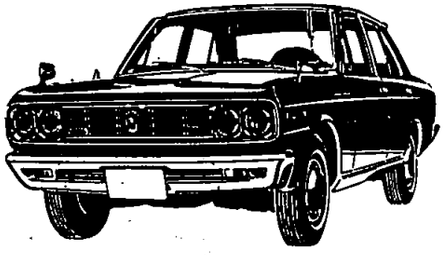

Printed in Japan

NISSAN MOTOR CO., LTD.

REAR BRAKE & WHEEL CYLINDER (1) ('69 YEAR MODEL)

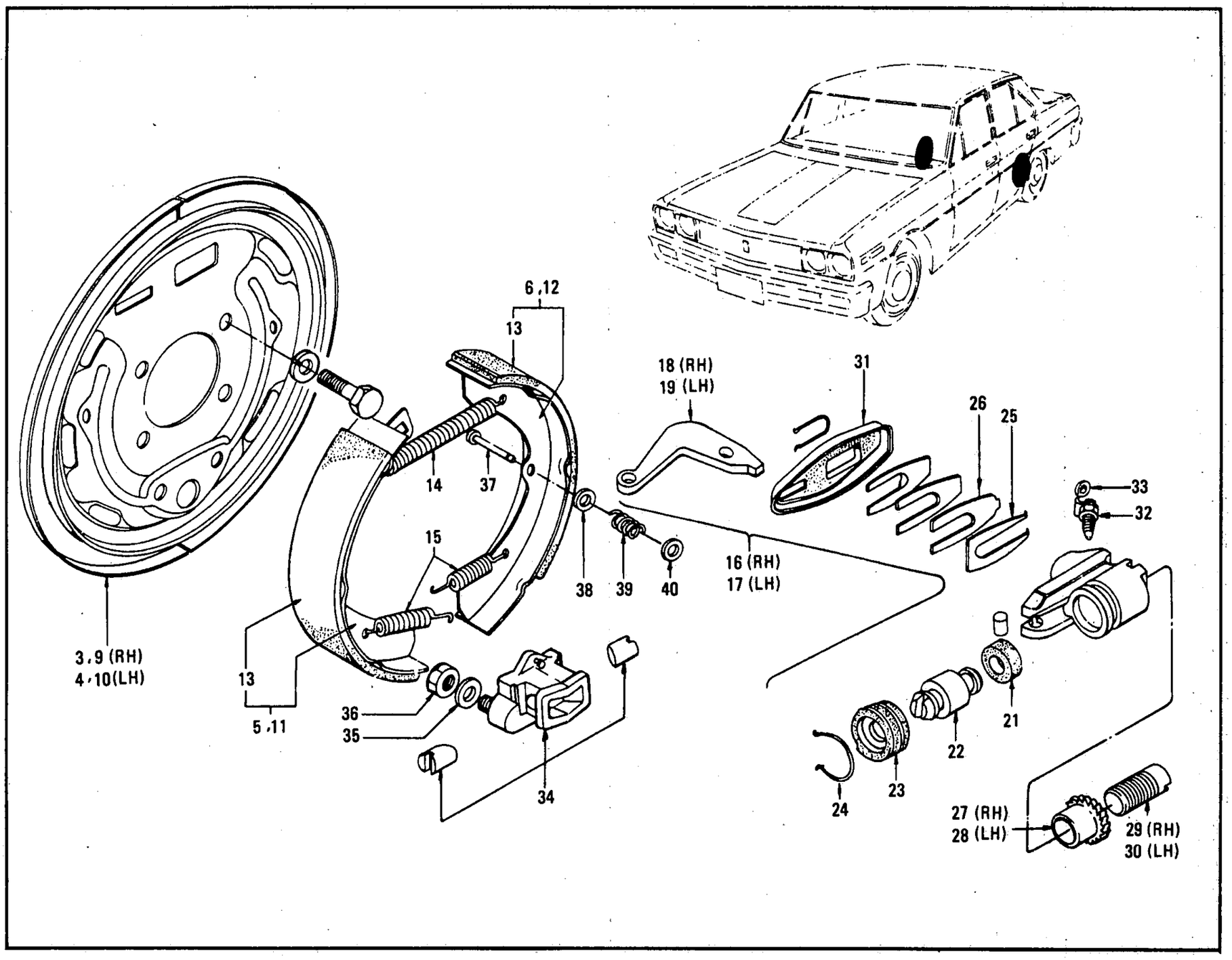

ILLUSTRATION **193**

© 1972 NISSAN MOTOR CO., LTD.

REVISED: DECEMBER, 1972

PRINTED IN JAPAN

REAR BRAKE & WHEEL CYLINDER (1) ('69 YEAR MODEL)

S	KEY NO.	PART NO.	DESCRIPTION	Q'TY	UNIT PKG FOR DIST.	APPLIED MODEL	APPLIED DATE FROM	APPLIED DATE UP TO	ICA N	ICA F	SUPERSEDED
	1D1	44000-E0202	ASSY-BRAKE REAR RH(TOKICO)	1	1	SEDAN R DRIVE		0969	Y	Y	44000-E0201
	D2	44000-E0203	ASSY-BRAKE REAR RH (TOKICO)	1		SEDAN R DRIVE			Y	N	44000-E0202
	2D1	44010-E0202	ASSY-BRAKE REAR LH(TOKICO)	1	1	SEDAN R DRIVE		0969	Y	Y	44010-E0201
	D2	44010-E0203	ASSY-BRAKE REAR LH (TOKICO)	1		SEDAN R DRIVE			Y	N	44010-E0202
*	3D1	44020-E0102	ASSY-DISC REAR BRAKE RH	1	1	SEDAN R DRIVE		0969	Y	Y	44020-E0101
	D2	44020-P0101	ASSY-DISC REAR BRAKE LH	1	1	SEDAN R DRIVE			Y	N	44020-E0102
*	4D1	44030-E0102	ASSY-DISC REAR BRAKE LH	1	1	SEDAN R DRIVE		0969	Y	Y	44030-E0101
	D2	44030-P0101	ASSY-DISC REAR BRAKE LH	1	1	SEDAN R DRIVE			Y	N	44030-E0102
*	D3	44030-E0102	ASSY-DISC REAR BRAKE LH	1	1	WAGON & VAN		0969	Y	N	44030-E0101
	5D1	44060-E0200	ASSY-SHOE REAR BRAKE FORE	2	4	SEDAN R DRIVE		0969			
	6D1	44070-E0200	ASSY-SHOE REAR BRAKE AFTER	2	4	SEDAN R DRIVE		0969			
	7D1	44000-E1202	ASSY-BRAKE REAR RH(TOKICO)	1		SEDAN L DRIVE		0969	Y	Y	44000-E1201
	D2	44000-E1203	ASSY-BRAKE REAR RH (TOKICO)	1		SEDAN L DRIVE	1069		Y	N	44000-E1202
	8D1	44010-E1202	ASSY-BRAKE REAR LH(TOKICO)	1		SEDAN L DRIVE		0969	Y	Y	44010-E1201
	D2	44010-E1203	ASSY-BRAKE REAR LH (TOKICO)	1		SEDAN L DRIVE		0969	Y	N	44010-E1202
*	9D1	44020-E0102	ASSY-DISC REAR BRAKE RH	1	1	SEDAN L DRIVE		0969	Y	Y	44020-E0101
	D2	44020-P0101	ASSY-DISC REAR BRAKE RH	1	1	SEDAN L DRIVE			Y	N	44020-E0102
*	10D1	44030-E0102	ASSY-DISC REAR BRAKE LH	1	1	SEDAN L DRIVE		0969	Y	Y	44030-E0101
	D2	44030-P0101	ASSY-DISC REAR BRAKE LH	1	1	SEDAN L DRIVE		0969	Y	N	44030-E0102
	11D1	44060-E0400	ASSY-SHOE REAR BRAKE FORE	2	4	SEDAN L DRIVE		0969	Y	Y	44100-E0100
	12D1	44070-E0400	ASSY-SHOE REAR BRAKE AFTER	2	4	SEDAN L DRIVE		0969	Y	Y	44101-E0100
	13D1	44066-73000	LINING-BRAKE REAR	4	8	SEDAN		0969			
	14D1	44090-E0200	SPRING-RETURN REAR BRAKE SHOE CYLINDER	2	10	SEDAN		0969			

NOTE:

C

PRINTED IN JAPAN

© 1972 NISSAN MOTOR CO., LTD.

REAR BRAKE & WHEEL CYLINDER (1) ('69 YEAR MODEL)

S	KEY NO.	PART NO.	DESCRIPTION	Q'TY	UNIT PKG FOR DIST.	APPLIED MODEL	APPLIED DATE FROM	APPLIED DATE UP TO	ICA N	ICA F	SUPERSEDED
	1501	44091-73000	SPRING-RETURN REAR BRAKE SHOE ADJUSTER	4	5	SEDAN		0969			
	02	44091-E0100	SPRING-RETURN REAR BRAKE SHOE ADJUSTER	4	10	SEDAN		0969	N	N	44091-73000
	1601	44100-E0201	ASSY-CYLINDER REAR WHEEL RH	1	1	SEDAN		0969	Y	Y	44100-E0201
	1701	44101-E0201	ASSY-CYLINDER REAR WHEEL LH	1	1	SEDAN		0969	Y	Y	44101-E0200
*	1801	44118-E0110	LEVER RH	1	1	SEDAN		0969			
	02	44118-E0410	LEVER RH	1	5	SEDAN		0969	Y	N	44118-E0110
	1901	44119-E0110	LEVER LH	1	5	SEDAN		0969			
	2001	44125-68200	SPRING	1	10	SEDAN		0969			
	2101	41124-30101	CUP-PISTON	1	50	SEDAN		0969			
	2201	44108-E0210	PISTON	1	5	SEDAN		0969			
	2301	44124-E0210	COVER-DUST	1	10	SEDAN		0969			
	2401	44113-31710	RING-SNAP	1	10	SEDAN		0969			
	2501	44141-E0210	PLATE-ADJUST	1	10	SEDAN		0969			
	2601	44149-E0210	PLATE-LOCK	1	10	SEDAN		0969			
	2701	44152-E0210	ADJUSTER RH	1	5	SEDAN		0969			
	2801	44153-E0210	ADJUSTER LH	1	5	SEDAN		0969			
	2901	44145-E0210	SCREW-ADJUSTER RH	1		SEDAN		0969			
	3001	44155-E0210	SCREW-ADJUSTER LH	1	10	SEDAN		0969			
	3101	44144-E0210	COVER-DUST	1	5	SEDAN		0969			
	3201	41128-E0310	SCREW-BLEEDER	1	10	SEDAN		0969			
	3301	41129-30001	CAP-BLEEDER	1	10	SEDAN		0969			
	3401	44200-E0100	ASSY-BLOCK ANCHOR	2	1	SEDAN		0969			

NOTE:

© 1972 NISSAN MOTOR CO., LTD.

REVISED: DECEMBER, 1972
PRINTED IN JAPAN

REAR BRAKE & WHEEL CYLINDER (1) ('69 YEAR MODEL)

S	KEY NO.	PART NO.	DESCRIPTION	Q'TY	UNIT PKG FOR DIST.	APPLIED MODEL	APPLIED DATE FROM	APPLIED DATE UP TO	ICA N	ICA F	SUPERSEDED
	3501	00915-11510	WASHER-LOCK	4	50	SEDAN		0969			
	3601	00911-14510	NUT	4	50	SEDAN		0969			
	3701	44081-73000	PIN-ANTI SHOE RATTLER	4	10	SEDAN		0969			
	3801	44082-32200	SEAT-SPRING ANTI SHOE RATTLER	4	50	SEDAN		0969			
	3901	44083-E0100	SPRING-ANTI SHOE RATTLER	4	10	SEDAN		0969			
	4001	44084-32201	RETAINER-SPRING ANTI RATTLER	4	50	SEDAN		0969			

NOTE:

© 1972 NISSAN MOTOR CO., LTD.

PRINTED IN JAPAN

NOTE

NISSAN MOTOR CO., LTD.

Printed in Japan

NOTE

Printed in Japan

NISSAN MOTOR CO., LTD.

REAR BRAKE & WHEEL CYLINDER (2) ('70 YEAR MODEL)

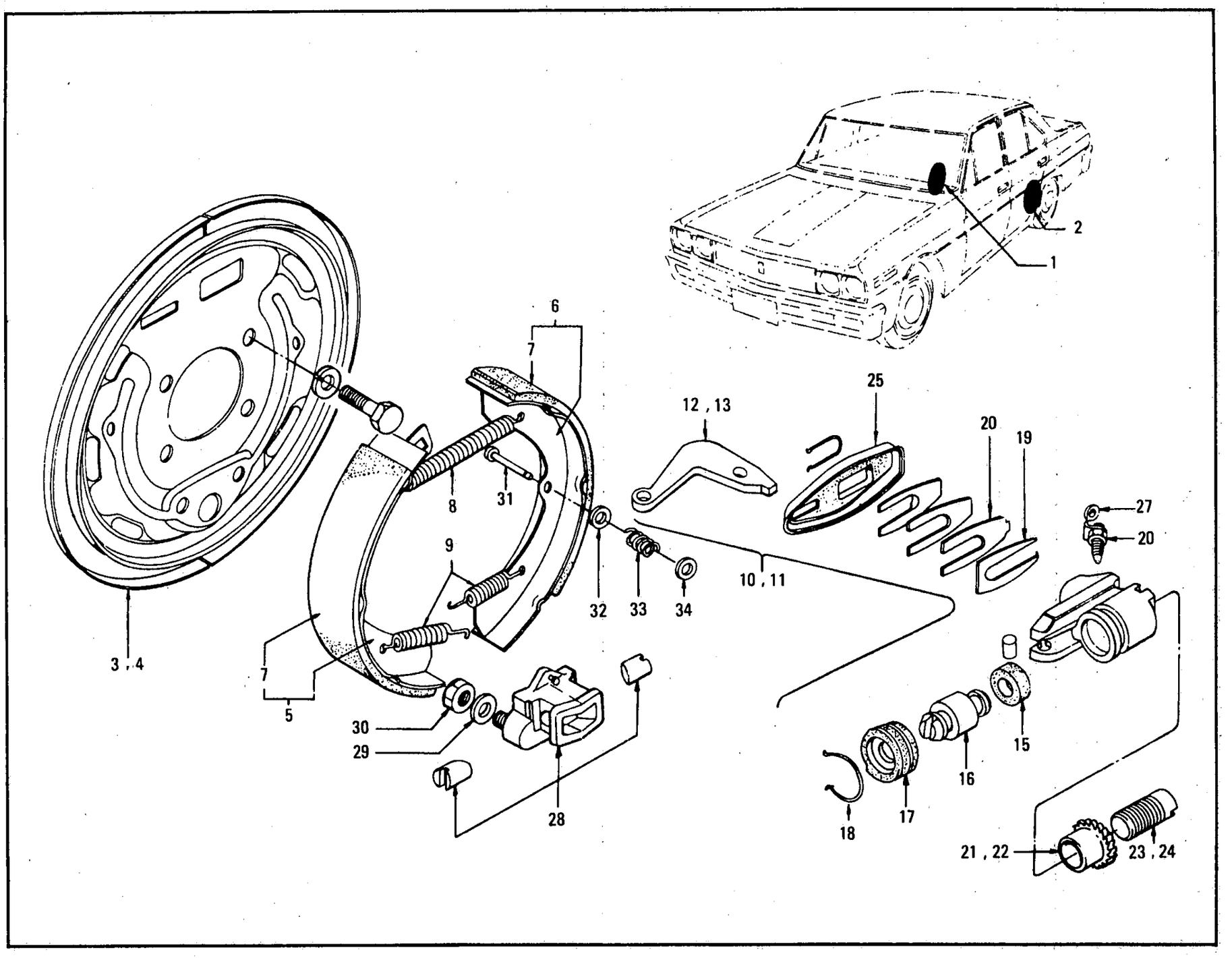

ILLUSTRATION **193A**

© 1972 NISSAN MOTOR CO., LTD.

REVISED: DECEMBER, 1972

PRINTED IN JAPAN

REAR BRAKE & WHEEL CYLINDER (2) ('70 YEAR MODEL)

S	KEY NO.	PART NO.	DESCRIPTION	Q'TY	UNIT PKG FOR DIST.	APPLIED MODEL	APPLIED DATE FROM	APPLIED DATE UP TO	ICA N	ICA F	SUPERSEDED
	101	44000-E1202	ASSY-BRAKE REAR RH(TOKICO)	1		SEDAN EXC SUPER CUSTOM	1069		Y	Y	44000-E1201
	02	44000-E1203	ASSY-BRAKE REAR RH (TOKICO)	1		SEDAN EXC SUPER CUSTOM		0969	Y	N	44000-E1202
	201	44010-E1202	ASSY-BRAKE REAR LH(TOKICO)	1		SEDAN EXC SUPER CUSTOM	1069		Y	Y	44010-E1201
	02	44010-E1203	ASSY-BRAKE REAR LH (TOKICO)	1		SEDAN EXC SUPER CUSTOM		0969	Y	N	44010-E1202
*	301	44020-E0102	ASSY-DISC REAR BRAKE RH	1	1	SEDAN EXC SUPER CUSTOM	1069		Y	Y	44020-E0101
	02	44020-P0101	ASSY-DISC REAR BRAKE LH	1	1	SEDAN EXC SUPER CUSTOM		0969	Y	N	44020-E0102
*	401	44030-E0102	ASSY-DISC REAR BRAKE LH	1	1	SEDAN EXC SUPER CUSTOM	1069		Y	Y	44030-E0101
	02	44030-P0101	ASSY-DISC REAR BRAKE LH	1	1	SEDAN EXC SUPER CUSTOM		0969	Y	N	44030-E0102
	501	44060-E0400	ASSY-SHOE REAR BRAKE FORE	2	4	SEDAN EXC SUPER CUSTOM	1069				
	601	44070-E0400	ASSY-SHOE REAR BRAKE AFTER	2	4	SEDAN EXC SUPER CUSTOM	1069				
	701	44066-73000	LINING-BRAKE REAR	4	8	SEDAN EXC SUPER CUSTOM	1069				
	801	44090-E0200	SPRING-RETURN REAR BRAKE SHOE CYLINDER	2	10	SEDAN EXC SUPER CUSTOM	1069				
	901	44091-73000	SPRING-RETURN REAR BRAKE SHOE ADJUSTER	4	5	SEDAN EXC SUPER CUSTOM	1069				
	02	44091-E0100	SPRING-RETURN REAR BRAKE SHOE ADJUSTER	4	10	SEDAN EXC SUPER CUSTOM	1069		N	N	44091-73000
	1001	44100-E0201	ASSY-CYLINDER REAR WHEEL RH	1	1	SEDAN EXC SUPER CUSTOM	1069		Y	Y	44100-E0200

NOTE:

© 1972 NISSAN MOTOR CO., LTD.

PRINTED IN JAPAN

REAR BRAKE & WHEEL CYLINDER (2) ('70 YEAR MODEL)

S	KEY NO.	PART NO.	DESCRIPTION	Q'TY	UNIT PKG FOR DIST.	APPLIED MODEL	APPLIED DATE FROM	APPLIED DATE UP TO	ICA N	ICA F	SUPERSEDED
	1101	44101-E0201	ASSY-CYLINDER REAR WHEEL LH	1	1	SEDAN EXC SUPER CUSTOM	1069		Y	Y	44100-E0100
*	1201	44118-E0110	LEVER RH	1	1	SEDAN EXC SUPER CUSTOM	1069		Y	Y	44101-E0100
	02	44118-E0410	LEVER RH	1	50	SEDAN EXC SUPER CUSTOM		0969	Y	N	44118-E0110
	1301	44119-E0110	LEVER LH	1	5	SEDAN EXC SUPER CUSTOM	1069				
	1401	44125-68200	SPRING	1	10	SEDAN EXC SUPER CUSTOM	1069				
*	1501	44124-30101	CUP-PISTON	1		SEDAN EXC SUPER CUSTOM	1069				
	1601	44108-E0210	PISTON	1	5	SEDAN EXC SUPER CUSTOM	1069				
	1701	44124-E0210	COVER-DUST	1	10	SEDAN EXC SUPER CUSTOM	1069				
	1801	44113-31710	RING-SNAP	1	10	SEDAN EXC SUPER CUSTOM	1069				
	1901	44141-E0210	PLATE-ADJUST	1	10	SEDAN EXC SUPER CUSTOM	1069				
	2001	44149-E0210	PLATE-LOCK	1	10	SEDAN EXC SUPER CUSTOM	1069				
	2101	44152-E0210	ADJUSTER RH	1	5	SEDAN EXC SUPER CUSTOM	1069				
	2201	44153-E0210	ADJUSTER LH	1	5	SEDAN EXC SUPER CUSTOM	1069				
	2301	44154-E0210	SCREW-ADJUSTER RH	1	10	SEDAN EXC SUPER CUSTOM	1069				
	2401	44155-E0210	SCREW-ADJUSTER LH	1	10	SEDAN EXC SUPER CUSTOM	1069				

NOTE:

© 1972 NISSAN MOTOR CO., LTD.

REVISED: DECEMBER, 1972
PRINTED IN JAPAN

REAR BRAKE & WHEEL CYLINDER (2) ('70 YEAR MODEL)

S	KEY NO.	PART NO.	DESCRIPTION	Q'TY	UNIT PKG FOR DIST.	APPLIED MODEL	APPLIED DATE FROM	APPLIED DATE UP TO	ICA N	ICA F	SUPERSEDED
	2501	- 44144-E0210	COVER-DUST	1	5	SEDAN EXC SUPER CUSTOM	1069				
	2601	- 41128-E0310	SCREW-BLEEDER	1	10	SEDAN EXC SUPER CUSTOM	1069				
	2701	- 41129-30001	CAP-BLEEDER	1	10	SEDAN EXC SUPER CUSTOM	1069				
	2801	- 44200-E0100	ASSY-BLOCK ANCHOR	2	1	SEDAN EXC SUPER CUSTOM	1069				
	2901	- 00915-11510	WASHER-LOCK 5/16	4	50	SEDAN EXC SUPER CUSTOM	1069				
	3001	- 00911-14510	NUT-HEX 5/16	4	50	SEDAN EXC SUPER CUSTOM	1069				
	3101	- 41081-73000	PIN-ANTI SHOE RATTLER L=35	4	10	SEDAN EXC SUPER CUSTOM	1069				
	3201	- 44082-32200	SEAT-SPRING ANTI SHOE RATTLER	4	50	SEDAN EXC SUPER CUSTOM	1069				
	3301	- 44083-E0100	SPRING-ANTI SHOE RATTLER	4	10	SEDAN EXC SUPER CUSTOM	1069				
	3401	- 44084-32201	RETAINER-SPRING ANTI RATTLER	4	50	SEDAN EXC SUPER CUSTOM	1069				

NOTE:

© 1972 NISSAN MOTOR CO., LTD.

PRINTED IN JAPAN

NOTE

NISSAN MOTOR CO., LTD.

Printed in Japan

NOTE

Printed in Japan

NISSAN MOTOR CO., LTD.

REAR BRAKE & WHEEL CYLINDER (3) ('69 YEAR MODEL)

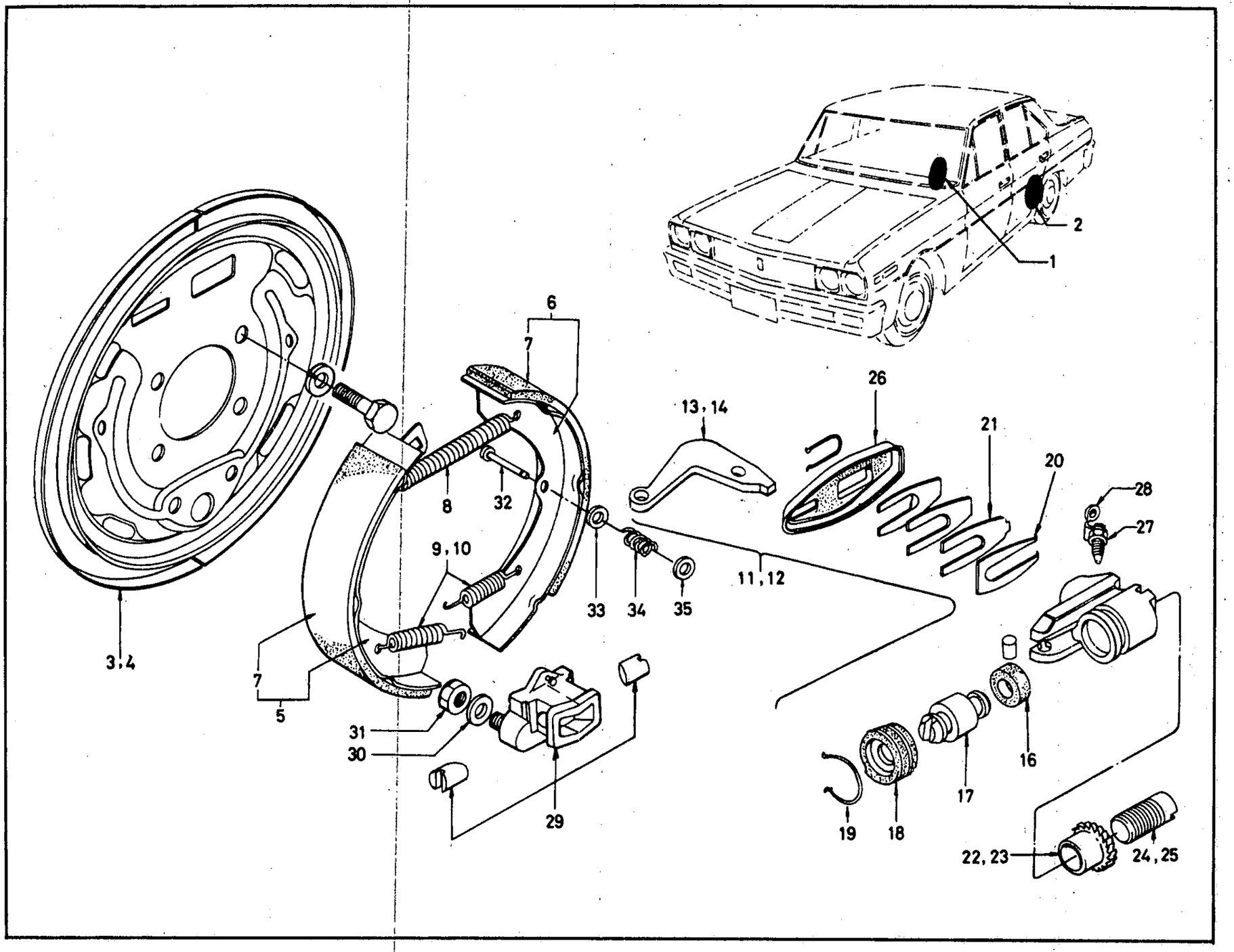

ILLUSTRATION **193B**

© 1972 NISSAN MOTOR CO., LTD.

REVISED: DECEMBER, 1972

PRINTED IN JAPAN

REAR BRAKE & WHEEL CYLINDER (3) ('69 YEAR MODEL)

S	KEY NO.	PART NO.	DESCRIPTION	Q'TY	UNIT PKG FOR DIST.	APPLIED MODEL	APPLIED DATE FROM	APPLIED DATE UP TO	ICA N	ICA F	SUPERSEDED
	101	44000-E0102	ASSY-BRAKE REAR RH(TOKICO)	1	1	OP SEDAN EXC STD		0969	Y	Y	44000-E0101
	02	44000-E0103	ASSY-BRAKE REAR RH (TOKICO)	1		OP SEDAN EXC STD	1069		Y	N	44000-E0102
	201	44010-E0102	ASSY-BRAKE REAR LH(TOKICO)	1	1	OP SEDAN EXC STD		0969	Y	Y	44010-E0101
	02	44010-E0103	ASSY-BRAKE REAR LH (TOKICO)	1		OP SEDAN EXC STD	1069		Y	N	44010-E0102
*	301	44020-E0101	ASSY-DISC REAR BRAKE RH	1		OP SEDAN EXC STD		0969	Y	Y	44020-E0100
*	02	44020-E0102	ASSY-DISC REAR BRAKE RH	1	1	OP SEDAN EXC STD		0969	Y	Y	44020-E0101
	03	44020-P0101	ASSY-DISC REAR BRAKE LH	1	1	OP SEDAN EXC STD	1069		Y	N	44020-E0102
*	401	44030-E0101	ASSY-DISC REAR BRAKE LH	1		OP SEDAN EXC STD		0969	Y	Y	44030-E0100
*	02	44030-E0102	ASSY-DISC REAR BRAKE LH	1	1	OP SEDAN EXC STD		0969	Y	Y	44030-E0101
	03	44030-P0101	ASSY-DISC REAR BRAKE LH	1	1	OP SEDAN EXC STD	1069		Y	N	44030-E0102
*	501	44060-E0100	ASSY-SHOE REAR BRAKE FORE	2	4	OP SEDAN EXC STD		0969			
	02	44060-E3200	ASSY-SHOE REAR BRAKE FORE	2	4	OP SEDAN EXC STD	1069		Y	N	44060-E0100
*	601	44070-E0100	ASSY-SHOE REAR BRAKE AFTER	2	4	OP SEDAN EXC STD		0969			
	02	44070-E3200	ASSY-SHOE REAR BRAKE AFTER	2	4	OP SEDAN EXC STD	1069		Y	N	44070-E0100
	701	44066-E0100	LINING-BRAKE REAR	4	8	OP SEDAN EXC STD		0969			
	801	44090-E0100	SPRING-RETURN REAR BRAKE SHOE CYLINDER	2	10	OP SEDAN EXC STD		0969			
	901	44091-73000	SPRING-RETURN REAR BRAKE SHOE ADJUST	4	5	OP SEDAN EXC STD		0969			
	1001	44091-E0100	SPRING-RETURN REAR BRAKE SHOE ADJUST	4	10	OP SEDAN EXC STD		0969	N	N	44091-73000
	1101	44100-E0101	ASSY-CYLINDER WHEEL REAR RH	1	1	OP SEDAN EXC STD		0969	Y	Y	44100-E0100
	1201	44101-E0101	ASSY-CYLINDER WHEEL REAR LH	1	1	OP SEDAN EXC STD		0969	Y	Y	44101-E0100
*	1301	44118-E0110	LEVER RH	1	1	OP SEDAN EXC STD		0969			

NOTE:

REVISED: DECEMBER, 1972

© 1972 NISSAN MOTOR CO., LTD.

PRINTED IN JAPAN

REAR BRAKE & WHEEL CYLINDER (3) ('69 YEAR MODEL)

S	KEY NO.	PART NO.	DESCRIPTION	Q'TY	UNIT PKG FOR DIST.	APPLIED MODEL	APPLIED DATE FROM	APPLIED DATE UP TO	ICA N	ICA F	SUPERSEDED
	1302	- 44118-E0410	LEVER RH	1		OP SEDAN EXC STD	1069		Y	N	44118-E0110
	1401	- 44119-E0110	LEVER LH	1	5	OP SEDAN EXC STD		0969			
	1501	- 44125-68200	SPRING	2	10	OP SEDAN EXC STD		0969			
	1601	- 44112-32211	CUP	2	20	OP SEDAN EXC STD		0969			
	1701	- 44108-E0110	PISTON	2	5	OP SEDAN EXC STD		0969			
	1801	- 44124-E0210	COVER-DUST	2	10	OP SEDAN EXC STD		0969			
	1901	- 44113-31710	RING-SNAP	2	10	OP SEDAN EXC STD		0969			
	2001	- 44141-E0210	PLATE-ADJUSTER	2	10	OP SEDAN EXC STD		0969			
	2101	- 44149-E0210	PLATE-LOCK	2	10	OP SEDAN EXC STD		0969			
	2201	- 44152-E0210	ADJUSTER-RH	1	5	OP SEDAN EXC STD		0969			
	2301	- 44153-E0210	ADJUSTER LH	1	5	OP SEDAN EXC STD		0969			
	2401	- 44154-E0210	SCREW-ADJUSTER RH	1	10	OP SEDAN EXC STD		0969			
	2501	- 44155-E0210	SCREW-ADJUSTER LH	1	10	OP SEDAN EXC STD		0969			
	2601	- 44144-E0210	COVER-DUST	2	5	OP SEDAN EXC STD		0969			
	2701	- 41128-E0310	SCREW-BLEEDER	2	10	OP SEDAN EXC STD		0969			
	2801	- 41129-30001	CAP-BLEEDER	2	10	OP SEDAN EXC STD		0969	Y	Y	44100-E0401
	2901	- 44200-E0100	ASSY-BLOCK ANCHOR	2	1	OP SEDAN EXC STD		0969	Y	Y	44101-E0401
	3001	- 00915-11510	WASHER-LOOK 5/16	4	50	OP SEDAN EXC STD		0969			
	3101	- 00911-14510	NUT 5/16-24	4	50	OP SEDAN EXC STD		0969			
	3201	- 41081-73000	PIN-ANTI SHOE RATTLER	4	10	OP SEDAN EXC STD		0969			
	3301	- 44082-32200	SEAT-SPRING ANTI SHOE RATTLER	4	50	OP SEDAN EXC STD DIESEL		0969			
	3401	- 44083-E0100	SPRING-ANTISHOE RATTLER	4	10	OP SEDAN EXC STD		0969			

NOTE:

© 1972 NISSAN MOTOR CO., LTD.

REVISED: DECEMBER, 1972
PRINTED IN JAPAN

REAR BRAKE & WHEEL CYLINDER (3) ('69 YEAR MODEL)

S	KEY NO.	PART NO.	DESCRIPTION	Q'TY	UNIT PKG FOR DIST.	APPLIED MODEL	APPLIED DATE FROM	APPLIED DATE UP TO	ICA N	ICA F	SUPERSEDED
	3501	- 44084-32201	RETAINER-SPRING ANTI RATTLER	4	50	OP SEDAN EXC STD		0969			

NOTE:

© 1972 NISSAN MOTOR CO., LTD.

PRINTED IN JAPAN

NOTE

NISSAN MOTOR CO., LTD.

Printed in Japan

NOTE

Printed in Japan

NISSAN MOTOR CO., LTD.

REAR BRAKE & WHEEL CYLINDER [4] ('70 YEAR MODEL)

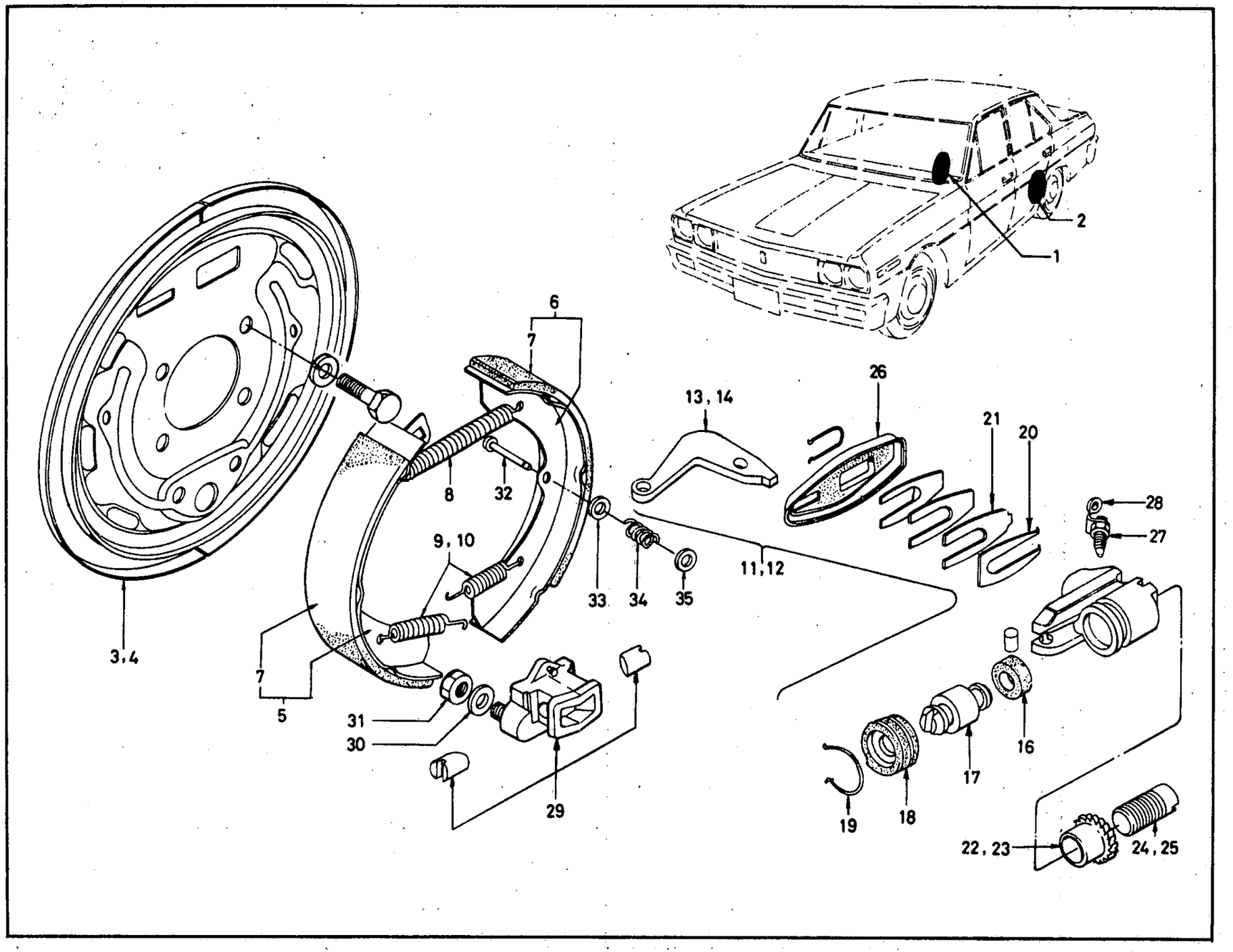

ILLUSTRATION **193c**

© 1972 NISSAN MOTOR CO., LTD.

REVISED: DECEMBER, 1972

PRINTED IN JAPAN

REAR BRAKE & WHEEL CYLINDER (4) ('70 YEAR MODEL)

S	KEY NO.	PART NO.	DESCRIPTION	Q'TY	UNIT PKG FOR DIST.	APPLIED MODEL	APPLIED DATE FROM	APPLIED DATE UP TO	ICA N	ICA F	SUPERSEDED
	101	44000-E0102	ASSY-BRAKE REAR RH(TOKICO)	1	1	SUPER CUSTOM OP P-DX	1069		Y	Y	44000-E0101
	02	44000-E0103	ASSY-BRAKE REAR RH (TOKICO)	1		SUPER CUSTOM OP P-DX	1069		Y	N	44000-E0102
	201	44010-E0102	ASSY-BRAKE REAR LH(TOKICO)	1	1	SUPER CUSTOM OP P-DX	1069		Y	Y	44010-E0101
	02	44010-E0103	ASSY-BRAKE REAR LH (TOKICO)	1		SUPER CUSTOM OP P-DX	1069		Y	N	44010-E0102
*	301	44020-E0101	ASSY-DISC REAR BRAKE RH	1		SUPER CUSTOM OP P-DX	1069		Y	Y	44020-E0100
*	02	44020-E0102	ASSY-DISC REAR BRAKE RH	1	1	SUPER CUSTOM OP P-DX	1069		Y	Y	44020-E0101
	03	44020-P0101	ASSY-DISC REAR BRAKE RH	1	1	SUPER CUSTOM OP P-DX	1069		Y	N	44020-E0102
*	401	44030-E0101	ASSY-DISC REAR BRAKE LH	1		SUPER CUSTOM OP P-DX	1069		Y	Y	44030-E0100
*	02	44030-E0102	ASSY-DISC REAR BRAKE LH	1	1	SUPER CUSTOM OP P-DX	1069		Y	Y	44030-E0101
	03	44030-P0101	ASSY-DISC REAR BRAKE LH	1	1	SUPER CUSTOM OP P-DX	1069		Y	N	44030-E0102
*	501	44060-E0100	ASSY-SHOE REAR BRAKE FORE	2	4	SUPER CUSTOM OP P-DX	1069				
	02	44060-E3200	ASSY-SHOE REAR BRAKE FORE	2	4	SUPER CUSTOM OP P-DX	1069		Y	N	44060-E0100
*	601	44070-E0100	ASSY-SHOE REAR BRAKE AFTER	2	4	SUPER CUSTOM OP P-DX	1069				
	02	44070-E3200	ASSY-SHOE REAR BRAKE AFTER	2	4	SUPER CUSTOM OP P-DX	1069		Y	N	44070-E0100
	701	44066-E0100	LINING-BRAKE REAR	4	8	SUPER CUSTOM OP P-DX	1069		Y	Y	44000-E1201

NOTE:

© 1972 NISSAN MOTOR CO., LTD.

PRINTED IN JAPAN

REAR BRAKE & WHEEL CYLINDER (4) ('70 YEAR MODEL)

S	KEY NO.	PART NO.	DESCRIPTION	Q'TY	UNIT PKG FOR DIST.	APPLIED MODEL	APPLIED DATE FROM	APPLIED DATE UP TO	ICA N	ICA F	SUPERSEDED
	801	44090-E0100	SPRING-RETURN REAR BRAKE SHOE CYLINDER	2	10	SUPER CUSTOM OP P-DX	1069		Y	Y	44010-E1201
	901	44091-73000	SPRING-RETURN REAR BRAKE SHOE ADJUST	4	5	SUPER CUSTOM OP P-DX	1069		Y	Y	44020-E0101
	1001	44091-E0100	SPRING-RETURN REAR BRAKE SHOE ADJUST	4	10	SUPER CUSTOM OP P-DX	1069		N	N	44091-73000
	1101	44100-E0101	ASSY-CYLINDER WHEEL REAR RH	1	1	SUPER CUSTOM OP P-DX	1069		Y	Y	44100-E0100
	1201	44101-E0101	ASSY-CYLINDER WHEEL REAR LH	1	1	SUPER CUSTOM OP P-DX	1069		Y	Y	44101-E0100
*	1301	44118-E0110	LEVER RH	1	1	SUPER CUSTOM OP P-DX	1069				
	02	44118-E0410	LEVER RH	1		SUPER CUSTOM OP P -DX	1069		Y	N	44118-E0110
	1401	44119-E0110	LEVER LH	1	5	SUPER CUSTOM OP P-DX	1069				
	1501	44125-68200	SPRING	2	10	SUPER CUSTOM OP P-DX	1069				
	1601	44112-32211	CUP	2	20	SUPER CUSTOM OP P-DX	1069		Y	Y	44100-E0201
	1701	44108-E0110	PISTON	2	5	SUPER CUSTOM OP P-DX	1069		Y	Y	44101-E0200
	1801	44124-E0210	COVER-DUST	2	10	SUPER CUSTOM OP P-DX	1069				
	1901	44113-31710	RING-SNAP	2	10	SUPER CUSTOM OP P-DX	1069				
	2001	44141-E0210	PLATE-ADJUSTER	2	10	SUPER CUSTOM OP P-DX	1069				
	2101	44149-E0210	PLATE-LOOK	2	10	SUPER CUSTOM OP P-DX	1069				

NOTE:

© 1972 NISSAN MOTOR CO., LTD.

REVISED: DECEMBER, 1972
PRINTED IN JAPAN

REAR BRAKE & WHEEL CYLINDER (4) ('70 YEAR MODEL)

S	KEY NO.	PART NO.	DESCRIPTION	Q'TY	UNIT PKG FOR DIST.	APPLIED MODEL	APPLIED DATE FROM	APPLIED DATE UP TO	ICA N	ICA F	SUPERSEDED
	2201	- 44152-E0210	ADJUSTER RH	1	5	SUPER CUSTOM OP P-DX	1069				
	2301	- 44153-E0210	ADJUSTER LH	1	5	SUPER CUSTOM OP P-DX	1069				
	2401	- 44154-E0210	SCREW-ADJUSTER RH	1	10	SUPER CUSTOM OP P-DX	1069				
	2501	- 44155-E0210	SCREW-ADJUSTER LH	1	10	SUPER CUSTOM OP P-DX	1069				
	2601	- 44144-E0210	COVER-DUST	2	5	SUPER CUSTOM OP P-DX	1069				
	2701	- 41128-E0310	SCREW-BLEEDER	2	10	SUPER CUSTOM OP P-DX	1069				
	2801	- 41129-30001	CAP-BLEEDER	2	10	SUPER CUSTOM OP P-DX	1069				
	2901	- 44200-E0100	ASSY-BLOCK ANCHOR	2	1	SUPER CUSTOM OP P-DX	1069				
	3001	- 00915-11510	WASHER-LOCK 5/16	4	50	SUPER CUSTOM OP P-DX	1069				
	3101	- 00911-14510	NUT-HEX 5/16-24	4	50	SUPER CUSTOM OP P-DX	1069				
	3201	- 41081-73000	PIN-ANTI SHOE RATTLER L=35	4	10	SUPER CUSTOM OP P-DX	1069				
	3301	- 44082-32200	SEAT-SPRING ANTI SHOE RATTLER	4	50	SUPER CUSTOM OP P-DX	1069				
	3401	- 44083-E0100	SPRING-ANTI SHOE RATTLER	4	10	SUPER CUSTOM OP P-DX	1069				
	3501	- 44084-32201	RETAINER-SPRING ANTI RATTLER	4	50	SUPER CUSTOM OP P-DX	1069				

NOTE:

REVISED: DECEMBER, 1972
© 1972 NISSAN MOTOR CO., LTD.

PRINTED IN JAPAN

NOTE

NISSAN MOTOR CO., LTD.

Printed in Japan

NOTE

Printed in Japan

NISSAN MOTOR CO., LTD.

REAR BRAKE & WHEEL CYLINDER (5) (W & V)

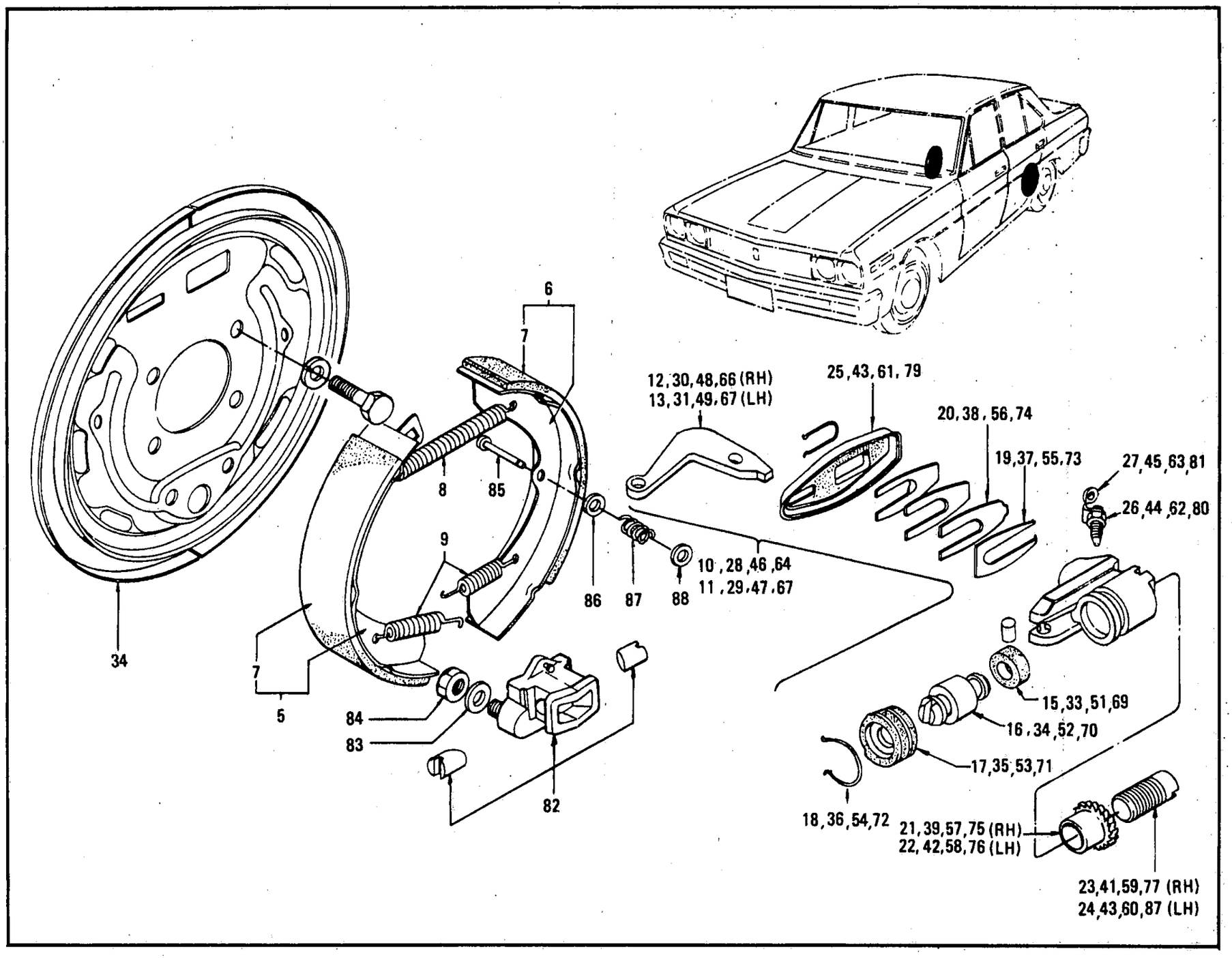

ILLUSTRATION **193D**

© 1972 NISSAN MOTOR CO., LTD.

REVISED: DECEMBER, 1972

PRINTED IN JAPAN

NISSAN

REAR BRAKE & WHEEL CYLINDER [5] (W & V)

S	KEY NO.	PART NO.	DESCRIPTION	Q'TY	UNIT PKG FOR DIST.	APPLIED MODEL	APPLIED DATE FROM	APPLIED DATE UP TO	ICA N	ICA F	SUPERSEDED
	1D1	44000-E0402	ASSY-BRAKE REAR RH(TOKICO)	1	1	WAGON RD VAN		0969	Y	Y	44000-E0401
	D2	44000-E1202	ASSY-BRAKE REAR RH(TOKICO)	1		WAGON L DRIVE		0969	Y	Y	44000-E1201
	D3	44000-E1203	ASSY-BRAKE REAR RH (TOKICO)	1		WAGON L DRIVE	1069		Y	N	44000-E1202
	D4	44000-E0402	ASSY-BRAKE REAR RH(TOKICO)	1	1	VAN-DELUX	1069		Y	Y	44000-E0401
	D5	44000-E0403	ASSY-BRAKE REAR RH (TOKICO)	1		VAN-DELUX	1069		Y	N	44000-E0402
	D6	44000-E1202	ASSY-BRAKE REAR RH(TOKICO)	1		WAGON	1069		Y	Y	44000-E1201
	2D1	44010-E0402	ASSY-BRAKE REAR LH(TOKICO)	1	1	WAGON R DRIVE VAN	1069		Y	Y	44010-E0401
	D2	44010-E0403	ASSY-BRAKE REAR LH (TOKICO)	1		VAN	1069		Y	N	44010-E0402
	D3	44010-E1202	ASSY-BRAKE REAR LH(TOKICO)	1		WAGON L DRIVE	1069		Y	Y	44010-E1201
	D4	44010-E1203	ASSY-BRAKE REAR LH (TOKICO)	1		WAGON L DRIVE	1069		Y	N	44010-E1202
	D5	44010-E0402	ASSY-BRAKE REAR LH(TOKICO)	1	1	VAN-DELUX	1069		Y	Y	44010-E0401
	D6	44010-E1202	ASSY-BRAKE REAR LH(TOKICO)	1		WAGON	1069		Y	Y	44020-E0101
*	3D1	44020-E0101	ASSY-DISC REAR BRAKE RH	1		WAGON & VAN			Y	Y	44020-E0101
*	D2	44020-E0102	ASSY-DISC REAR BRAKE RH	1	1	WAGON & VAN			Y	Y	44020-E0101
	D3	44020-P0101	ASSY-DISC REAR BRAKE RH	1	1	WAGON & VAN	1069		Y	N	44020-E0102
*	4D1	44030-E0101	ASSY-DISC REAR BRAKE LH	1		WAGON & VAN					
*	D2	44030-E0102	ASSY-DISC REAR BRAKE LH	1	1	WAGON & VAN	1069		Y	N	44030-E0101
	D3	44030-P0101	ASSY-DISC REAR BRAKE LH	1	1	WAGON & VAN	1069		Y	N	44030-E0102
	5D1	44060-E0400	ASSY-SHOE REAR BRAKE FORE	2	4	WAGON & VAN					
	6D1	44070-E0400	ASSY-SHOE REAR BRAKE AFTER	2	4	WAGON & VAN					
	7D1	44066-73000	LINING-BRAKE REAR	4	8	WAGON & VAN					
	8D1	44090-E0200	SPRING-RETURN REAR BRAKE SHOE CYLINDER	2	10	WAGON & VAN					

NOTE:

© 1972 NISSAN MOTOR CO., LTD.

PRINTED IN JAPAN

REAR BRAKE & WHEEL CYLINDER [5] (W & V)

S	KEY NO.	PART NO.	DESCRIPTION	QTY	UNIT PKG FOR DIST.	APPLIED MODEL	APPLIED DATE FROM	APPLIED DATE UP TO	ICA N	ICA F	SUPERSEDED
	901	44091-73000	SPRING-RETURN REAR BRAKE SHOE ADJUSTER	4	5	WAGON & VAN					
	02	44091-E0100	SPRING-RETURN REAR BRAKE SHOE ADJUSTER	4	10	WAGON & VAN			N	N	44091-73000
	1001	44100-E0401	ASSY-CYLINDER REAR WHEEL RH	1	1	WAGON & VAN		0964	Y	Y	44100-E0400
	1101	44101-E0401	ASSY-CYLINDER REAR WHEEL LH	1	1	WAGON & VAN		0964	Y	Y	44101-E0400
	1201	44118-E0410	LEVER RH	1	5	WAGON & VAN					
	1301	44119-E0410	LEVER LH	1	5	WAGON & VAN					
	1401	44125-68200	SPRING	1	10	WAGON & VAN					
	1501	44112-44311	CAP	1	20	WAGON & VAN					
	1601	44108-E0410	PISTON	1	5	WAGON & VAN					
	1701	44124-E0410	COVER-DUST	1	10	WAGON & VAN					
	1801	44113-73210	RING-SNAP	1	10	WAGON & VAN					
	1901	44141-E0210	PLATE-ADJUSTER	1	10	WAGON & VAN					
	2001	44149-E0210	PLATE-LOCK	1	10	WAGON & VAN					
	2101	44152-E0210	ADJUSTER RH	1	5	WAGON & VAN					
	2201	44153-E0210	ADJUSTER LH	1	5	WAGON & VAN					
	2301	44154-E0210	SCREW-ADJUSTER RH	1	10	WAGON & VAN					
	2401	44155-E0210	SCREW-ADJUSTER LH	1	10	WAGON & VAN					
	2501	44144-E0210	COVER-DUST	1	5	WAGON & VAN					
	2601	41128-E0310	SCREW-BLEEDER	1	10	WAGON & VAN					
	2701	41129-30001	CAP-BLEEDER	1	10	WAGON & VAN					
	2801	44100-E0401	ASSY-CYLINDER REAR WHEEL RH	1	1	VAN-DELUXE	1069		Y	Y	44100-E0401
	2901	44101-E0401	ASSY-CYLINDER REAR WHEEL LH	1	1	VAN-DELUXE	1069		Y	Y	44101-E0401

NOTE:

© 1972 NISSAN MOTOR CO., LTD.

REVISED: DECEMBER, 1972
PRINTED IN JAPAN

NISSAN

REAR BRAKE & WHEEL CYLINDER (5) (W & V)

S	KEY NO.	PART NO.	DESCRIPTION	Q'TY	UNIT PKG FOR DIST.	APPLIED MODEL	APPLIED DATE FROM	APPLIED DATE UP TO	ICA N	ICA F	SUPERSEDED
	30D1	44118-E0410	LEVER RH	1	5	VAN-DELUXE					
	31D1	44119-E0410	LEVER LH	1	5	VAN-DELUXE					
	32D1	44125-68200	SPRING	1	10	VAN-DELUXE					
	33D1	44112-44311	CAP	1	20	VAN-DELUXE					
	34D1	44108-E0410	PISTON	1	5	VAN-DELUXE					
	35D1	44124-E0410	COVER-DUST	1	10	VAN-DELUXE					
	36D1	44113-73210	RING-SNAP	1	10	VAN-DELUXE					
	37D1	44141-E0210	PLATE-ADJUSTER	1	10	VAN-DELUXE					
	38D1	44149-E0210	PLATE-LOCK	1	10	VAN-DELUXE					
	39D1	44152-E0210	ADJUSTER RH	1	5	VAN-DELUXE					
	40D1	44153-E0210	ADJUSTER LH	1	5	VAN-DELUXE					
	41D1	44154-E0210	SCREW-ADJUSTER RH	1	10	VAN-DELUXE					
	42D1	44155-E0210	SCREW-ADJUSTER LH	1	10	VAN-DELUXE					
	43D1	44144-E0210	COVER-DUST	1	5	VAN-DELUXE					
	44D1	41128-E0310	SCREW-BLEEDER	1	10	VAN-DELUXE					
	45D1	41129-30001	CAP-BLEEDER	1	10	VAN-DELUXE					
	46D1	44100-E0201	ASSY-CYLINDER REAR WHEEL RH	1	1	WAGON L DRIVE		0969	Y	Y	44100-E0200
	47D1	44101-E0201	ASSY-CYLINDER REAR WHEEL LH	1	1	WAGON L DRIVE		0969	Y	Y	44101-E0200
*	48D1	44118-E0110	LEVER RH	1	1	WAGON L DRIVE					
	D2	44118-E0410	LEVER RH	1	5	WAGON L DRIVE	1069		Y	N	44118-E0110
	49D1	44119-E0110	LEVER LH	1	5	WAGON L DRIVE					
	50D1	44125-68200	SPRING	1	10	WAGON L DRIVE					
*	51D1	44124-30101	CUP-PISTON	1		WAGON L DRIVE					

NOTE:

© 1972 NISSAN MOTOR CO., LTD.

PRINTED IN JAPAN

REAR BRAKE & WHEEL CYLINDER (5) (W & V)

S	KEY NO.	PART NO.	DESCRIPTION	QTY	UNIT PKG FOR DIST.	APPLIED MODEL	APPLIED DATE FROM	APPLIED DATE UP TO	ICA N	ICA F	SUPERSEDED
	5102	41124-30101	CUP-PISTON	1	50	WAGON L DRIVE			Y	N	44124-30101
	5201	44108-E0210	PISTON	1	5	WAGON L DRIVE					
	5301	44124-E0210	COVER-DUST	1	10	WAGON L DRIVE					
	5401	44113-31710	RING-SNAP	1	10	WAGON L DRIVE					
	5501	44141-E0210	PLATE-ADJUST	1	10	WAGON L DRIVE					
	5601	44149-E0210	PLATE-LOCK	1	10	WAGON L DRIVE					
	5701	44152-E0210	ADJUSTER RH	1	5	WAGON L DRIVE					
	5801	44153-E0210	ADJUSTER LH	1	5	WAGON L DRIVE					
	5901	44154-E0210	SCREW-ADJUSTER RH	1	10	WAGON L DRIVE					
	6001	44155-E0210	SCREW-ADJUSTER LH	1	10	WAGON L DRIVE					
	6101	44144-E0210	COVER-DUST	1	5	WAGON L DRIVE					
	6201	41128-E0310	SCREW-BLEEDER	1	10	WAGON L DRIVE					
	6301	41129-30001	CAP-BLEEDER	1	10	WAGON L DRIVE					
	6401	44100-E0201	ASSY-CYLINDER REAR WHEEL RH	1	1	WAGON	1069				
	6501	44101-E0201	ASSY-CYLINDER REAR WHEEL LH	1	1	WAGON	1069				
*	6601	44118-E0110	LEVER RH	1	1	WAGON					
	02	44118-E0410	LEVER RH	1	5	WAGON	1069		Y	N	44118-E0110
	6701	44119-E0110	LEVER LH	1	5	WAGON					
	6801	44125-68200	SPRING	1	10	WAGON					
*	6901	44124-30101	CUP-PISTON	1		WAGON					
	7001	44108-E0210	PISTON	1	5	WAGON					
	7101	44124-E0210	COVER-DUST	1	10	WAGON					
	7201	44113-31710	RING-SNAP	1	10	WAGON					

NOTE:

© 1972 NISSAN MOTOR CO., LTD.

REVISED: DECEMBER, 1972
PRINTED IN JAPAN

REAR BRAKE & WHEEL CYLINDER (5) (W & V)

S	KEY NO.	PART NO.	DESCRIPTION	Q'TY	UNIT PKG FOR DIST.	APPLIED MODEL	APPLIED DATE FROM	APPLIED DATE UP TO	ICA N	ICA F	SUPERSEDED
	7301	► 44141-E0210	PLATE-ADJUST	1	10	WAGON					
	7401	► 44149-E0210	PLATE-LOCK	1	10	WAGON					
	7501	► 44152-E0210	ADJUST RH	1	5	WAGON					
	7601	► 44153-E0210	ADJUST LH	1	5	WAGON					
	7701	► 44154-E0210	SCREW-ADJUSTER RH	1	10	WAGON					
	7801	► 44155-E0210	SCREW-ADJUSTER LH	1	10	WAGON					
	7901	► 44144-E0210	COVER-DUST	1	5	WAGON					
	8001	► 41128-E0310	SCREW-BLEEDER	1	10	WAGON					
	8101	► 41129-30001	CAP-BLEEDER	1	10	WAGON					
	8201	► 44200-E0100	ASSY-ADJUSTER REAR BRAKE	2	1	WAGON					
	8301	► 00915-11510	WASHER-LOCK	4	50	WAGON					
	8401	► 00911-14510	NUT	4	50	WAGON					
	8501	► 41081-73000	PIN-ANTI SHOE RATTLER	4	10	WAGON					
	8601	► 44082-32200	SEAT-SPRING ANTI SHOE RATTLER	4	50	WAGON					
	8701	► 44083-E0100	SPRING-ANTI SHOE RATTLER	4	10	WAGON					
	8801	► 44084-32201	RETAINER-SPRING ANTI RATTLER	4	50	WAGON					

NOTE:

© 1972 NISSAN MOTOR CO., LTD.

PRINTED IN JAPAN

NOTE

NISSAN MOTOR CO., LTD.

Printed in Japan

NOTE

Printed in Japan

NISSAN MOTOR CO., LTD.

BRAKE PIPING & G VALVE (SEDAN)

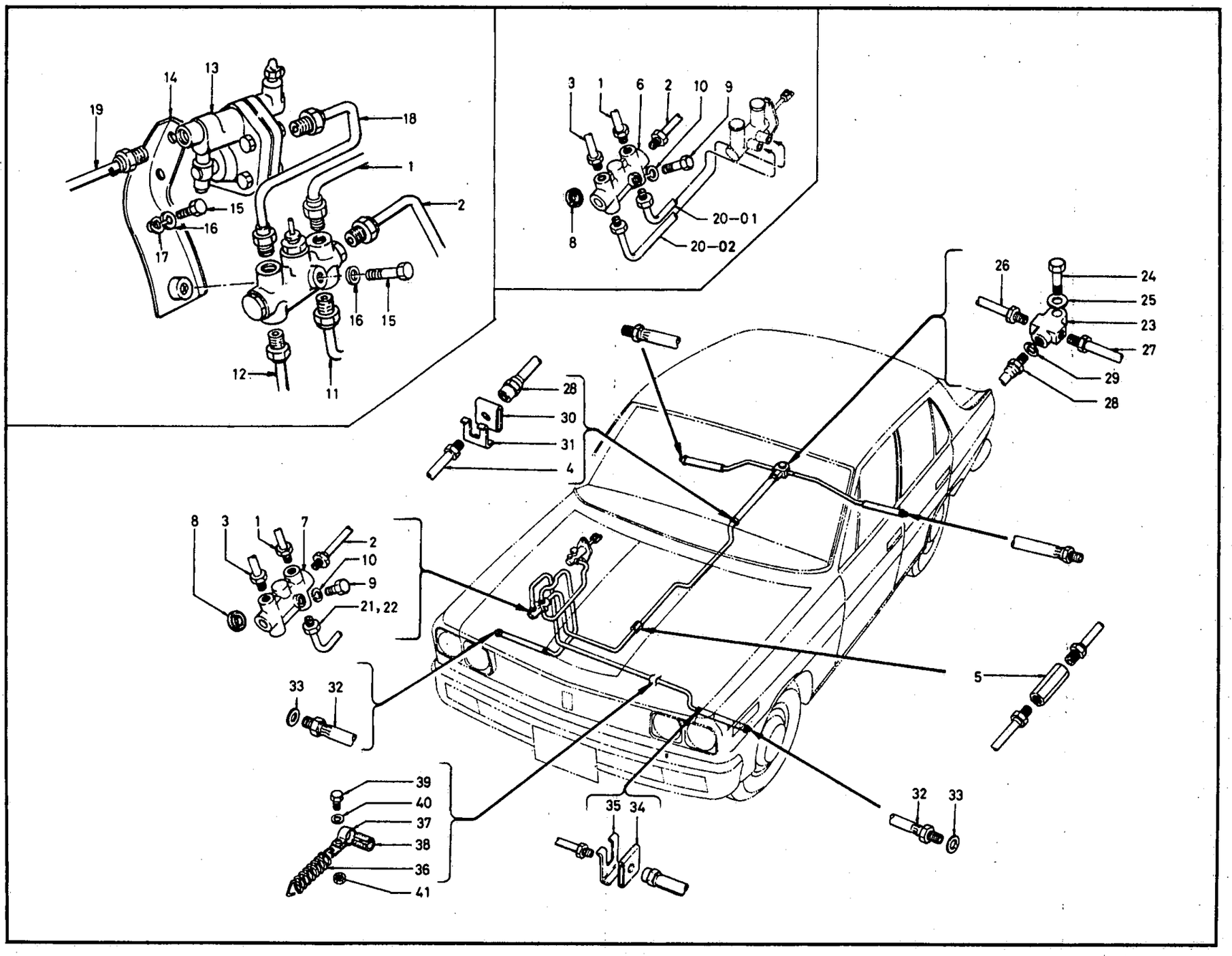

ILLUSTRATION **194-1**

© 1972 NISSAN MOTOR CO., LTD.

REVISED: DECEMBER, 1972

PRINTED IN JAPAN

BRAKE PIPING (W & V)

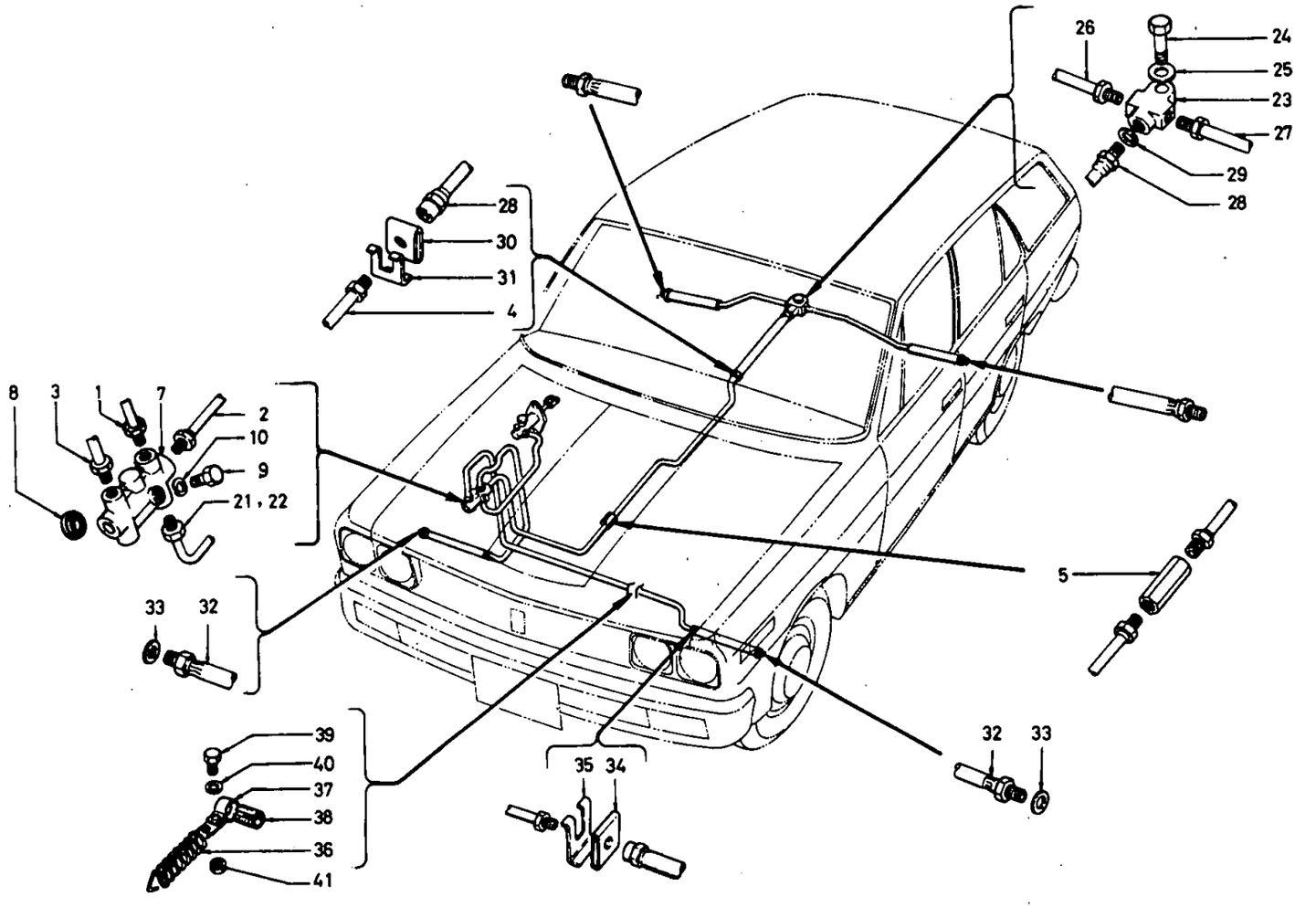

© 1972 NISSAN MOTOR CO., LTD.

PRINTED IN JAPAN

BRAKE PIPING & G VALVE

S	KEY NO.	PART NO.	DESCRIPTION	Q'TY	UNIT PKG FOR DIST.	APPLIED MODEL	APPLIED DATE FROM	APPLIED DATE UP TO	ICA N	ICA F	SUPERSEDED
	101	46240-E0102	ASSY-BRAKE TUBE CONN TO FRONT R/H	1	5	R DRIVE					
	02	46240-E0103	ASSY-BRAKE TUBE CONN,TO FRONT R/H	1	5	R DRIVE			N	N	46240-E0102
	03	46242-E1202	ASSY-BRAKE TUBE CONN TO FRONT R/H	1	1	L DRIVE					
	201	46242-E0104	ASSY-BRAKE TUBE CONN TO FRONT L/H	1	1	R DRIVE					
	02	46240-E1202	ASSY-BRAKE TUBE CONN TO FRONT L/H	1	5	L DRIVE					
	301	46282-E0201	ASSY-BRAKE TUBE REAR NO1	1	1	R DRIVE					
	02	46282-E1202	ASSY-BRAKE TUBE REAR NO1	1	1	L DRIVE					
	401	46284-73005	ASSY-BRAKE TUBE REAR NO2	1	1	ALL					
	02	46284-E3200	ASSY-BRAKE TUBE REAR NO,2	1	5	ALL			N	N	46284-73005
	501	46364-35000	CONNECTOR-BRAKE TUBE	1	5	ALL					
	601	46255-E0200	CONNECTOR-BRAKE 5 WAY	1	1	SUPER DELUXE RD CUSTOM LD					
	701	46255-E0700	CONNECTOR-BRAKE TUBE 4 WAY	1	1	ALL EXC SUPER CUSTOM DELUXE					
	801	46257-21003	SPACER-CONNECTOR BRAKE TUBE	1	10	ALL EXC CUSTOM LD					
	901	46528-E0100	BOLT 1/4-28UNF	1	10	ALL					
	02	00114-43510	BOLT 1/4-28UNF	1	25	PERSONAL WAGON		0969			
	1001	00915-11410	WASHER-SPRING	1	50	ALL					
	1101	46252-E0102	ASSY-BRAKE TUBE FRONT M/CYL TO INDICATOR SWITCH	1	5	SUPER DX R DRIVE					
	1201	46253-E0101	ASSY-BRAKE TUBE REAR M/CYL TO INDICATOR SWITCH	1	5	SUPER CUSTOM DX R DRIVE					

NOTE:

© 1972 NISSAN MOTOR CO., LTD.

REVISED: DECEMBER, 1972
PRINTED IN JAPAN

BRAKE PIPING & G VALVE

S	KEY NO.	PART NO.	DESCRIPTION	QTY	UNIT PKG FOR DIST.	APPLIED MODEL	APPLIED DATE FROM	APPLIED DATE UP TO	ICA N	ICA F	SUPERSEDED
	1301	46400-E0101	ASSY-G VALVE	1	1	SUPER OP CUSTOM P-DX	1069				
	1401	46450-E0100	BRACKET-G VALVE	1	1	SUPER OP CUSTOM P-DX	1069				
	1501	00124-41410	BOLT-HEX 1/4-28UNF	2		SUPER OP CUSTOM P-DX	1069				
	1601	00915-11410	WASHER-LOCK	2	50	SUPER OP-CUSTOM P-DX	1069				
	1701	00915-41410	WASHER-PLAIN	1	50	SUPER OP CUSTOM P-DX	1069				
	1801	46280-E0101	ASSY-TUBE BRAKE CONN TO G VALVE	1	5	SUPER RD OP CUSTOM P-DX RD	1069				
	02	46280-E3300	ASSY-TUBE BRAKE CONN TO G VALVE	1	1	SUPER LD OP CUSTOM P-DX LD	1069				
	1901	46282-E0101	ASSY-TUBE BRAKE G VALVE TO REAR	1	1	SUPER RD OP CUSTOM P-DX RD	1069				
	02	46282-E3300	ASSY-TUBE BRAKE G VALVE TO REAR	1	5	SUPER LD OP CUSTOM P-DX LD					
	2001	46252-E1202	ASSY-BRAKE TUBE FRONT M/CYL TO CONNECTOR	1	5	SUPER CUSTOM DELUXE R DRIVE					
	02	46253-E1202	ASSY-BRAKE TUBE REAR M/CYL TO CONNECTOR	1	5	SUPER CUSTOM DELUXE L DRIVE					
	2101	46252-E0702	ASSY-BRAKE TUBE M/CYL TO CONNECTOR	1	5	R DRIVE EXC SUPER CUSTOM DELUXE					
	2201	46252-E1301	ASSY-BRAKE TUBE M/CYL TO CON USE FOR SINGLE M/CYL	1	5	L DRIVE EXC SUPER CUSTOM DELUXE					
	02	46252-E0407	ASSY-BRAKE TUBE M/CYL TO CON FOR 6"M/VAC S/M CYL	1	5	OP R DRIVE EXC SUPER CUSTOM DELU XE					
	03	46252-E1402	ASSY-BRAKE TUBE M/CYL TO CON FOR 6"M/VAC S/M CYL	1	5	OP W & V PERSONAL P-DX STANDARD					

NOTE:

© 1972 NISSAN MOTOR CO., LTD.

PRINTED IN JAPAN

BRAKE PIPING & G VALVE

S	KEY NO.	PART NO.	DESCRIPTION	QTY	UNIT PKG FOR DIST.	APPLIED MODEL	APPLIED DATE FROM	APPLIED DATE UP TO	ICA N	ICA F	SUPERSEDED
	2301	46313-08701	CONNECTOR-BRAKE TUBE 3 WAY	1	1	ALL					
	2401	00111-62810	BOLT	1	50	ALL					
	2501	00915-11610	WASHER-LOCK	1	50	ALL					
*	2601	46290-E0100	ASSY-TUBE REAR BRAKE RH	1	5	ALL					
	02	46290-E0101	ASSY-TUBE REAR BRAKE RH	1	5	ALL			Y	N	46290-E0100
*	2701	46310-E0100	ASSY-TUBE REAR BRAKE LH	1	5	ALL					
	02	46310-E0101	ASSY-TUBE REAR	1	5	ALL	1069		Y	N	46310-E0100
	2801	46201-E0113	ASSY-HOSE BRAKE L=450	1	2	ALL			Y	N	46201-E0103
	2901	46237-F0800	GASKET-BRAKE HOSE	1	10	ALL					
	3001	46205-61000	PLATE-LOCK BRAKE HOSE	1	10	ALL					
	3101	46206-18000	SPRING-LOCK BRAKE HOSE	1	5	ALL					
	3201	46201-E0112	ASSY-HOSE BRAKE L=435	2	2	ALL			Y	Y	46201-E0102
	3301	46237-F0800	GASKET-BRAKE HOSE	2	10	ALL					
	3401	46205-61000	PLATE-LOCK BRAKE HOSE	2	10	ALL					
	3501	46206-18000	SPRING-LOCK BRAKE HOSE	2	5	ALL					
	3601	46361-73000	SPRING-BRAKE HOSE (LH)	1	10	ALL					
	3701	46362-E0100	CLAMP-BRAKE HOSE	1	5	ALL					
	3801	46363-E0100	RUBBER-PROTECT BRAKE HOSE	1	10	ALL					
	3901	00319-01200	SCREW	1	50	ALL					
	4001	00915-11010	WASHER-LOCK	1	50	ALL					
	4101	00911-14010	NUT	1	50	ALL					

NOTE:

© 1972 NISSAN MOTOR CO., LTD.

REVISED: DECEMBER, 1972
PRINTED IN JAPAN

NOTE

Printed in Japan

NISSAN MOTOR CO., LTD.

BRAKE & CLUTCH PEDAL (R DRIVE)

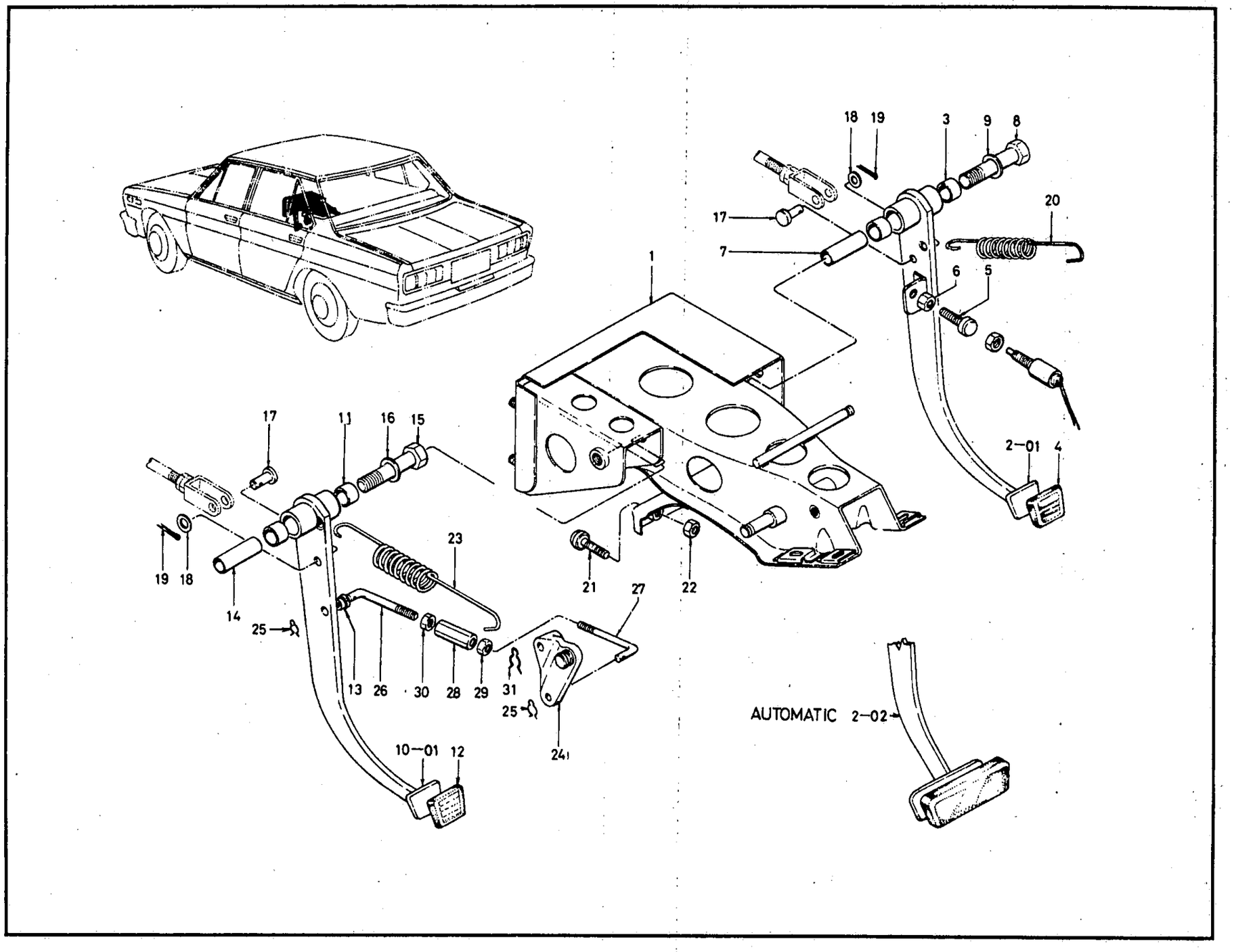

© 1972 NISSAN MOTOR CO., LTD.

REVISED: DECEMBER, 1972

PRINTED IN JAPAN

C

BRAKE & CLUTCH PEDAL (L DRIVE)

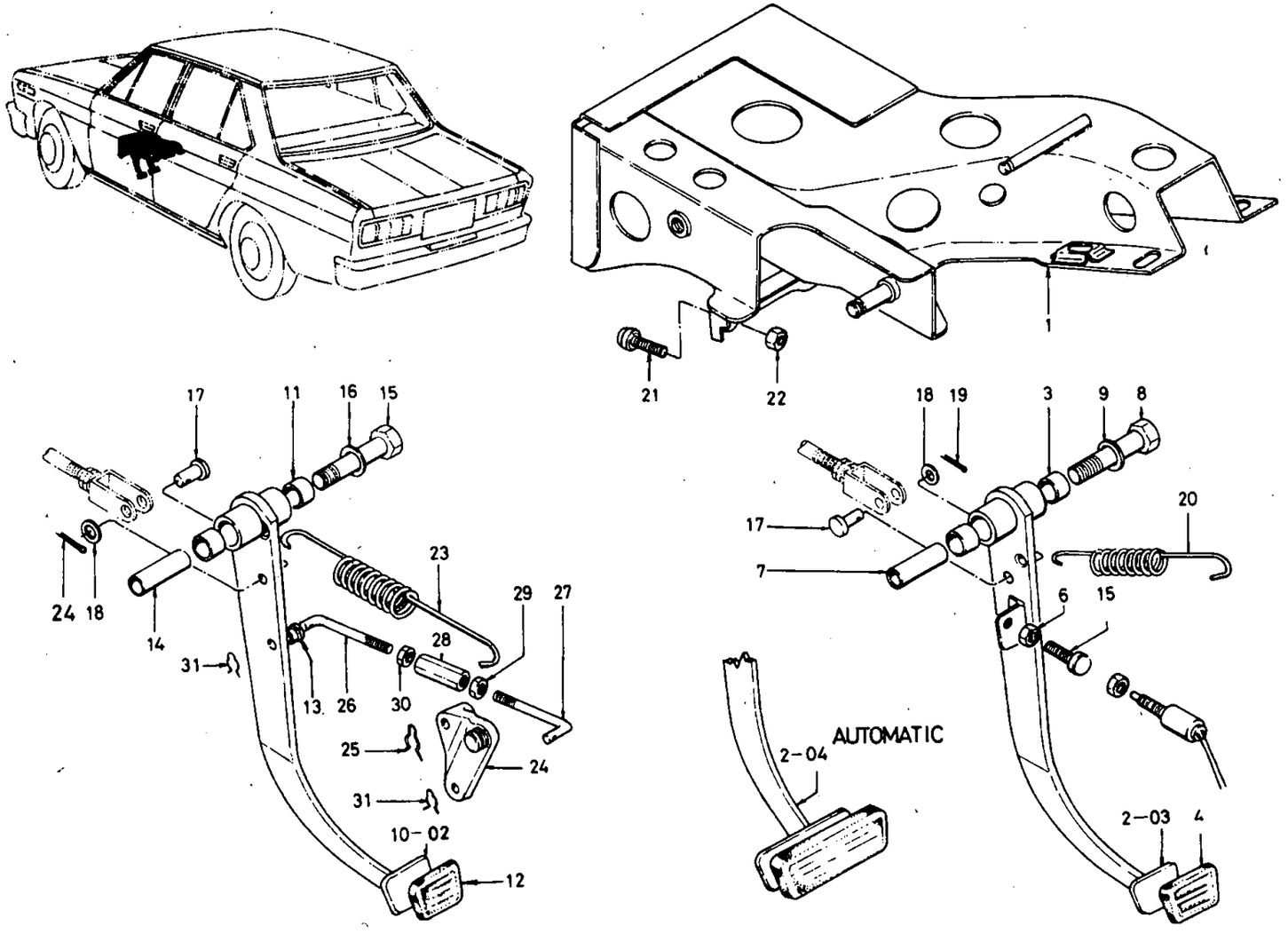

© 1972 NISSAN MOTOR CO., LTD.

PRINTED IN JAPAN

BRAKE & CLUTCH PEDAL

S	KEY NO.	PART NO.	DESCRIPTION	QTY	UNIT PKG FOR DIST.	APPLIED MODEL	APPLIED DATE FROM	APPLIED DATE UP TO	ICA N	ICA F	SUPERSEDED
	101	46510-E0100	ASSY-BRACKET STEERING SUPPORT & PEDAL	1	1	R DRIVE MANUAL					
	02	46510-E0110	ASSY-BRACKET STEERING SUPPORT & PEDAL	1	1	R DRIVE AUTOMATIC					
	03	46510-E1200	ASSY-BRACKET STEERING SUPPORT & PEDAL	1	1	L DRIVE MANUAL					
	04	46510-E1210	ASSY-BRACKET STEERING SUPPORT & PEDAL	1	1	L DRIVE AUTOMATIC					
	201	46520-E0100	ASSY-PEDAL BRAKE	1	1	R DRIVE MANUAL					
	02	46520-E0110	ASSY-PEDAL BRAKE	1	1	R DRIVE AUTOMATIC					
	03	46520-E1200	ASSY-PEDAL BRAKE	1	1	L DRIVE MANUAL					
	04	46520-E1210	ASSY-PEDAL BRAKE	1	1	L DRIVE AUTOMATIC					
	301	46525-73000	BUSH-PEDAL	2	5	ALL					
	401	46531-73001	COVER-PEDAL PAD	1	5	ALL					
	501	46518-E0100	STOPPER-PEDAL	1	10	ALL					
	601	00911-34510	NUT-LOCK	1	50	ALL					
	701	46582-73000	SLEEVE-PEDAL SHAFT	1	5	ALL					
	801	46560-73000	PIN-FULCRUM	1	5	ALL					
	901	00916-11810	WASHER	1	50	ALL					
	1001	46540-E0100	ASSY-PEDAL CLUTCH	1	1	R DRIVE MANUAL					
	02	46540-E1200	ASSY-PEDAL CLUTCH	1	1	L DRIVE MANUAL					
	1101	46525-73000	BUSH-PEDAL	2	5	MANUAL					
	1201	46531-73001	COVER-PEDAL PAD	1	5	MANUAL					
	1301	46533-73000	BUSH-PUSH ROD	1	10	AMANUAL					
	1401	46582-73000	SLEEVE-PEDAL SHAFT	1	5	MANUAL					

NOTE:

© 1972 NISSAN MOTOR CO., LTD.

REVISED: DECEMBER, 1972
PRINTED IN JAPAN

BRAKE & CLUTCH PEDAL

S	KEY NO.	PART NO.	DESCRIPTION	QTY	UNIT PKG FOR DIST.	APPLIED MODEL	APPLIED DATE FROM	APPLIED DATE UP TO	ICA N	ICA F	SUPERSEDED
	1501	46560-73000	PIN-FULCRUM	1	5	MANUAL					
	1601	00916-11810	WASHER	1	50	MANUAL					
	1701	46123-E0101	PIN-CLEVTS	1	10	ALL			Y	Y	46123-E0100
	1801	18019-15800	WASHER-PLAIN	2	10	MANUAL					
	02	18019-15800	WASHER-PLAIN	1	10	AUTOMATIC					
	1901	00921-11810	PIN-COTTER	2	50	MANUAL					
	02	00921-11810	PIN-COTTER	1	50	AUTOMATIC					
	2001	46585-E0100	SPRING-RETURN	1	5	ALL					
	2101	46518-E0100	STOPPER-PEDAL	1	10	ALL					
	2201	00911-34510	NUT	1	50	ALL					
	2301	46571-73002	SPRING-ASSIST	1	5	MANUAL					
	2401	46575-73002	LEVER-ASSIST SPRING	1	5	MANUAL					
	2501	46124-73000	SPRING-RETAINER	1	10	MANUAL					
	2601	46587-73000	STEM-PUSH ROD RH THREAD	1	10	MANUAL					
	2701	46588-73001	STEM-PUSH ROD LH THREAD	1	10	MANUAL					
	2801	34475-36700	ADJUSTER ROD	1	10	MANUAL					
	2901	34476-36700	NUT-LOCK	1	10	MANUAL					
	3001	00911-34510	NUT	1	50	MANUAL					
	3101	46124-08700	RETAINER-SPRING	2	10	MANUAL					

NOTE:

© 1972 NISSAN MOTOR CO., LTD.

PRINTED IN JAPAN

NOTE

NOTE

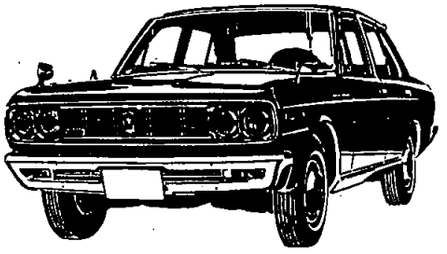

Printed in Japan

NISSAN MOTOR CO., LTD.

BRAKE MASTER CYLINDER (SINGLE)

Note; Key No. 1 ASSY-CYLINDER BRAKE MASTER (TOKICO)
includes Key No. 2 ~ 24

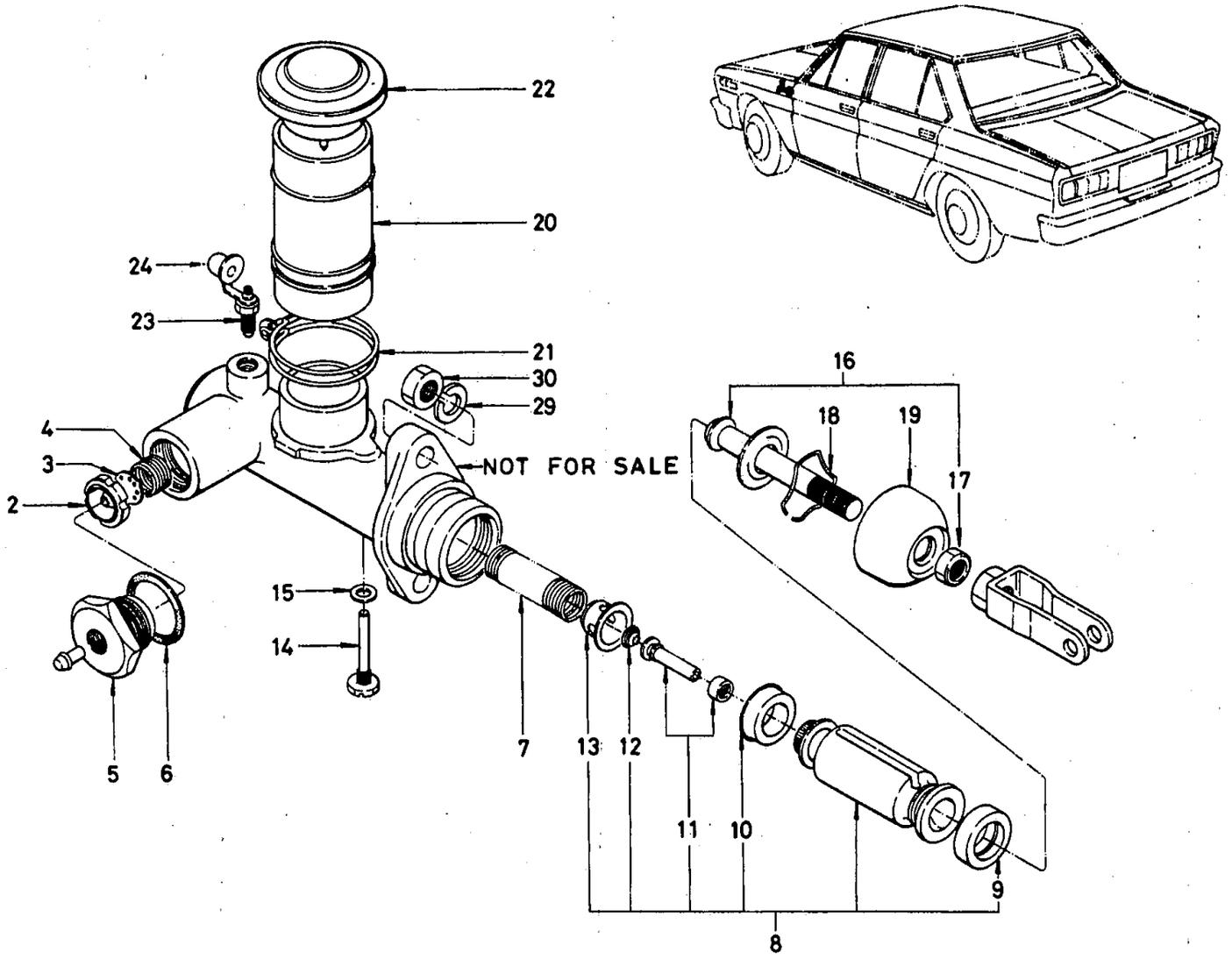

© 1972 NISSAN MOTOR CO., LTD.

REVISED: DECEMBER, 1972

PRINTED IN JAPAN

BRAKE MASTER CYLINDER (SINGLE)

S	KEY NO.	PART NO.	DESCRIPTION	QTY	UNIT PKG FOR DIST.	APPLIED MODEL	APPLIED DATE FROM	APPLIED DATE UP TO	ICA N	ICA F	SUPERSEDED
	101	46010-E0300	ASSY-CYLINDER BRAKE MASTER (TOKICO)	1	1	ALL(EXC SUPER CUSTOM DELUXE)					
	02	46010-E3706	ASSY-CYLINDER BRAKE MASTER FOR NORWAY & BELGIUM	1		ALL(EXC SUPER CUSTOM DELUXE)					
	201	46050-10610	ASSY-VALVE	1	10	ALL(EXC SUPER CUSTOM DELUXE)					
	301	46057-10610	SEAT-VALVE	1	10	ALL(EXC SUPER CUSTOM DELUXE)					
	401	46027-10610	SPRING-SEAT	1	10	ALL(EXC SUPER CUSTOM DELUXE)					
	501	46038-10610	CAP-VALVE	1	5	ALL(EXC SUPER CUSTOM DELUXE)					
	601	46042-27260	GASKET-CAP VALVE	1	10	ALL(EXC SUPER CUSTOM DELUXE)					
	701	46061-10610	SPRING-PISTON	1	5	ALL(EXC SUPER CUSTOM DELUXE)					
	801	46063-10611	ASSY-PISTON BRAKE MASTER	1	5	ALL(EXC SUPER CUSTOM DELUXE)					
	901	46068-10611	CUP-PISTON SECONDARY	1	10	ALL(EXC SUPER CUSTOM DELUXE)					
	1001	46078-10611	CUP-PISTON PRIMARY	1	10	ALL(EXC SUPER CUSTOM DELUXE)					
	1101	46073-10610	ASSY-VALVE INLET	1	10	ALL(EXC SUPER CUSTOM DELUXE)					
	1201	46056-27260	SPRING-VALVE INLET	1	10	ALL(EXC SUPER CUSTOM DELUXE)					
	1301	46062-10610	RETAINER-SPRING	1	10	ALL(EXC SUPER CUSTOM DELUXE)					
	1401	46070-10610	SCREW-STOPPER	1	10	ALL(EXC SUPER CUSTOM DELUXE)					

NOTE:

© 1972 NISSAN MOTOR CO., LTD.

PRINTED IN JAPAN

BRAKE MASTER CYLINDER (SINGLE)

S	KEY NO.	PART NO.	DESCRIPTION	QTY	UNIT PKG FOR DIST.	APPLIED MODEL	APPLIED DATE FROM	APPLIED DATE UP TO	ICA N	ICA F	SUPERSEDED
	1501	46079-10610	PACKING	1	10	ALL(EXC SUPER CUSTOM DELUXE)					
	1601	46080-73112	ASSY-ROD PUSH	1	5	ALL(EXC SUPER CUSTOM DELUXE)					
	1701	46103-73410	NUT	1	50	ALL(EXC SUPER CUSTOM DELUXE)					
	1801	46071-27260	RING-SNAP	1	50	ALL(EXC SUPER CUSTOM DELUXE)					
	1901	46100-27260	COVER-DUST	1	10	ALL(EXC SUPER CUSTOM DELUXE)					
	2001	46091-E0310	RESERVOIR-BRAKE OIL	1	5	ALL(EXC SUPER CUSTOM DELUXE)					
	2101	46016-10610	ASSY-BAND OIL RESERVOIR	1	5	ALL(EXC SUPER CUSTOM DELUXE)					
	2201	46020-10611	CAP-OIL RESERVOIR	1	5	ALL(EXC SUPER CUSTOM DELUXE)					
	2301	41128-E0310	SCREW-BLEEDER	1	10	ALL(EXC SUPER CUSTOM DELUXE)					
	2401	41129-30001	CAP-BLEEDER	1	10	ALL(EXC SUPER CUSTOM DELUXE)					
	2501	46015-E0300	ASSY-ADAPTER MASTER CYLINDER	1	1	ALL(EXC SUPER CUSTOM DELUXE)					
	2601	00915-41510	WASHER-PLAIN	4	50	ALL(EXC SUPER CUSTOM DELUXE)					
	2701	00915-21510	WASHER-LOCK	4	50	ALL(EXC SUPER CUSTOM DELUXE)					
	2801	00911-14510	NUT	4	50	ALL(EXC SUPER CUSTOM DELUXE)					
	2901	00915-21510	WASHER-LOCK	1	50	ALL(EXC SUPER CUSTOM DELUXE)					

NOTE:

© 1972 NISSAN MOTOR CO., LTD.

REVISED: DECEMBER, 1972
PRINTED IN JAPAN

BRAKE MASTER CYLINDER (SINGLE)

S	KEY NO.	PART NO.	DESCRIPTION	QTY	UNIT PKG FOR DIST.	APPLIED MODEL	APPLIED DATE FROM	APPLIED DATE UP TO	ICA N	ICA F	SUPERSEDED
	3001	00911-14510	NUT	2	50	ALL(EXC SUPER CUSTOM DELUXE)					
	3101	46010-10827	KIT'A' BRAKE MASTER CYLINDER REPAIR (TOKICO)	1	1	ALL(EXC SUPER CUSTOM DELUXE)					
	3201	46010-10828	KIT'B' BRAKE MASTER CYLINDER REPAIR (TOKICO)	1	1	ALL(EXC SUPER CUSTOM DELUXE)					

NOTE:

© 1972 NISSAN MOTOR CO., LTD.

PRINTED IN JAPAN

NOTE

NISSAN MOTOR CO., LTD.

Printed in Japan

NOTE

Printed in Japan

NISSAN MOTOR CO., LTD.

BRAKE MASTER CYLINDER (SINGLE)

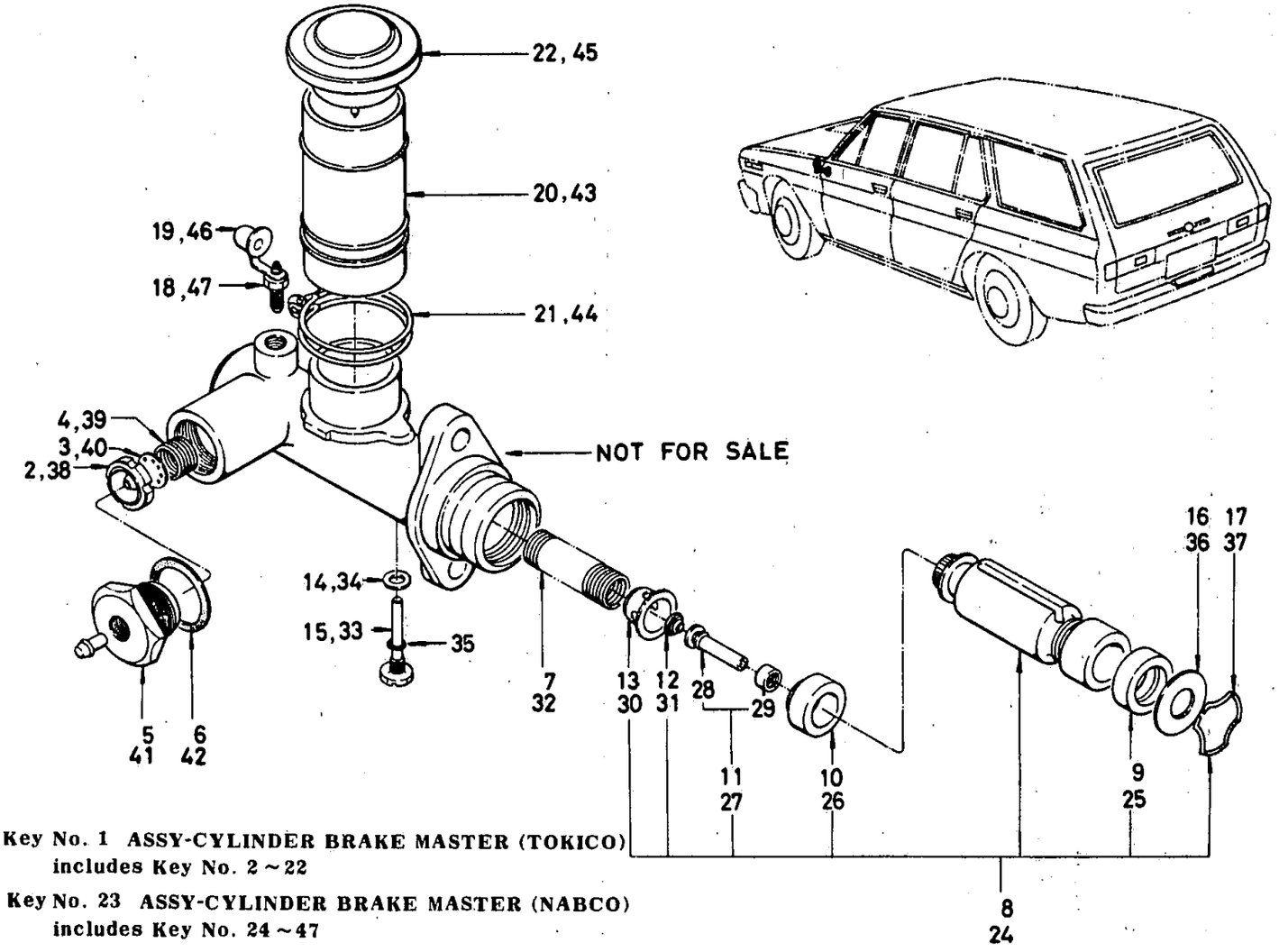

Note ; Key No. 1 ASSY-CYLINDER BRAKE MASTER (TOKICO)
includes Key No. 2 ~ 22

Key No. 23 ASSY-CYLINDER BRAKE MASTER (NABCO)
includes Key No. 24 ~ 47

© 1972 NISSAN MOTOR CO., LTD.

REVISED: DECEMBER, 1972

PRINTED IN JAPAN

NISSAN

BRAKE MASTER CYLINDER (SINGLE)

S	KEY NO.	PART NO.	DESCRIPTION	Q'TY	UNIT PKG FOR DIST.	APPLIED MODEL	APPLIED DATE FROM	APPLIED DATE UP TO	ICA N	ICA F	SUPERSEDED
	101	46010-E0400	ASSY-CYLINDER BRAKE MASTER (TOKICO)	1	1	OP W & V					
	201	46050-10610	ASSY-VALVE	1	10	OP W & V					
	301	46057-10610	SEAT-VALVE	1	10	OP W & V					
	401	46027-10610	SPRING-VALVE	1	10	OP W & V					
	501	46038-10610	CAP-VALVE	1	5	OP W & V					
	601	46042-27260	PACKING	1	10	OP W & V					
	701	46061-10610	SPRING-PISTON	1	5	OP W & V					
	801	46063-73510	ASSY-PISTON	1	5	OP W & V					
	901	46078-10611	CUP-PISTON PRIMARY	1	10	OP W & V					
	1001	46068-10611	CUP-PISTON SECONDARY	1	10	OP W & V					
	1101	46073-10610	ASSY-VALVE INLET	1	10	OP W & V					
	1201	46056-27260	SPRING-VALVE	1	10	OP W & V					
	1301	46062-10610	RETAINER-SPRING	1	10	OP W & V					
	1401	46079-10610	PACKING	1	10	OP W & V					
	1501	46070-10610	SCREW-STOPPER	1	10	OP W & V					
	1601	46072-73010	STOPPER	1	10	OP W & V					
	1701	46071-27260	RING-SNAP	1	50	OP W & V					
	1801	41128-E0310	SCREW-BLEEDER	1	10	OP W & V					
	1901	41129-30001	CAP-BLEEDER	1	10	OP W & V					
	2001	46091-E0310	RESERVOIR-OIL BRAKE	1	5	OP W & V					
	2101	46016-10610	ASSY-BAND OIL RESERVOIR	1	5	OP W & V					
	2201	46020-10611	SET-CAP OIL RESERVOIR	1	5	OP W & V					

NOTE:

C

PRINTED IN JAPAN

© 1972 NISSAN MOTOR CO., LTD.

BRAKE MASTER CYLINDER (SINGLE)

S	KEY NO.	PART NO.	DESCRIPTION	Q'TY	UNIT PKG FOR DIST.	APPLIED MODEL	APPLIED DATE FROM	APPLIED DATE UP TO	ICA N	ICA F	SUPERSEDED
	2301	46010-E0400	ASSY-CYLINDER BRAKE MASTER (NABCO)	1	1	OP W & V					
	2401	46063-73500	ASSY-PISTON BRAKE MASTER	1	1	OP W & V					
	2501	46064-10600	CUP-PISTON P	1	10	OP W & V					
	2601	46068-73500	CUP-PISTON S	1	20	OP W & V					
	2701	46073-30800	ASSY-VALVE	1	10	OP W & V					
	2801	46059-30800	VALVE-STEM	1	20	OP W & V					
	2901	46074-30800	VALVE-SEAT	1	10	OP W & V					
	3001	46076-30800	SEAT-SPRING	1	10	OP W & V					
	3101	46056-27260	SPRING-VALVE	1	10	OP W & V					
	3201	46061-10600	SPRING PISTON	1	5	OP W & V					
	3301	46070-10600	SCREW-STOPPER	1	10	OP W & V					
	3401	46043-27260	PACKING	1	50	OP W & V					
	3501	46079-27260	RING-'O'	1	10	OP W & V					
	3601	46070-73500	STOPPER-PISTON	1	10	OP W & V					
	3701	46071-27260	RING-STOPPER	1	50	OP W & V					
	3801	46050-10600	ASSY-VALVE	1	10	OP W & V					
	3901	46027-10600	SPRING-VALVE	1	10	OP W & V					
	4001	46057-10600	SEAT-VALVE	1	10	OP W & V					
	4101	46038-12200	CAP-VALVE	1	5	OP W & V					
	4201	46042-27260	GASKET	1	10	OP W & V					
	4301	46091-E0400	RESERVOIR-BRAKE OIL	1		OP W & V					
*	4401	46016-12200	ASSY-BAND RESERVOIR	1	5	OP W & V					

NOTE:

© 1972 NISSAN MOTOR CO., LTD.

REVISED: DECEMBER, 1972
PRINTED IN JAPAN

BRAKE MASTER CYLINDER (SINGLE)

S	KEY NO.	PART NO.	DESCRIPTION	Q'TY	UNIT PKG FOR DIST.	APPLIED MODEL	APPLIED DATE FROM	APPLIED DATE UP TO	ICA N	ICA F	SUPERSEDED
	4402	46016-14600	ASSY-BAND RESERVOIR	1	5	OP W & V			Y	N	46016-12200
*	4501	46020-28600	ASSY-CAP RESERVOIR	1	5	OP W & V			Y	N	46020-18000
	02	46020-R0100	ASSY-CAP RESERVOIR	1	10	OP W & V			Y	N	46020-28600
	03	46020-E0300	ASSY-CAP RESERVOIR	1	10	OP W & V					
	4601	41129-30001	CAP-BLEEDER SCREW	1	10	OP W & V					
	4701	41128-30001	SCREW-BLEEDER	1	10	OP W & V					

NOTE:

© 1972 NISSAN MOTOR CO., LTD.

PRINTED IN JAPAN

NOTE

NISSAN MOTOR CO., LTD.

Printed in Japan

NOTE

Printed in Japan

NISSAN MOTOR CO., LTD.

BRAKE MASTER CYLINDER (TANDEM) ('69 YEAR MODEL)

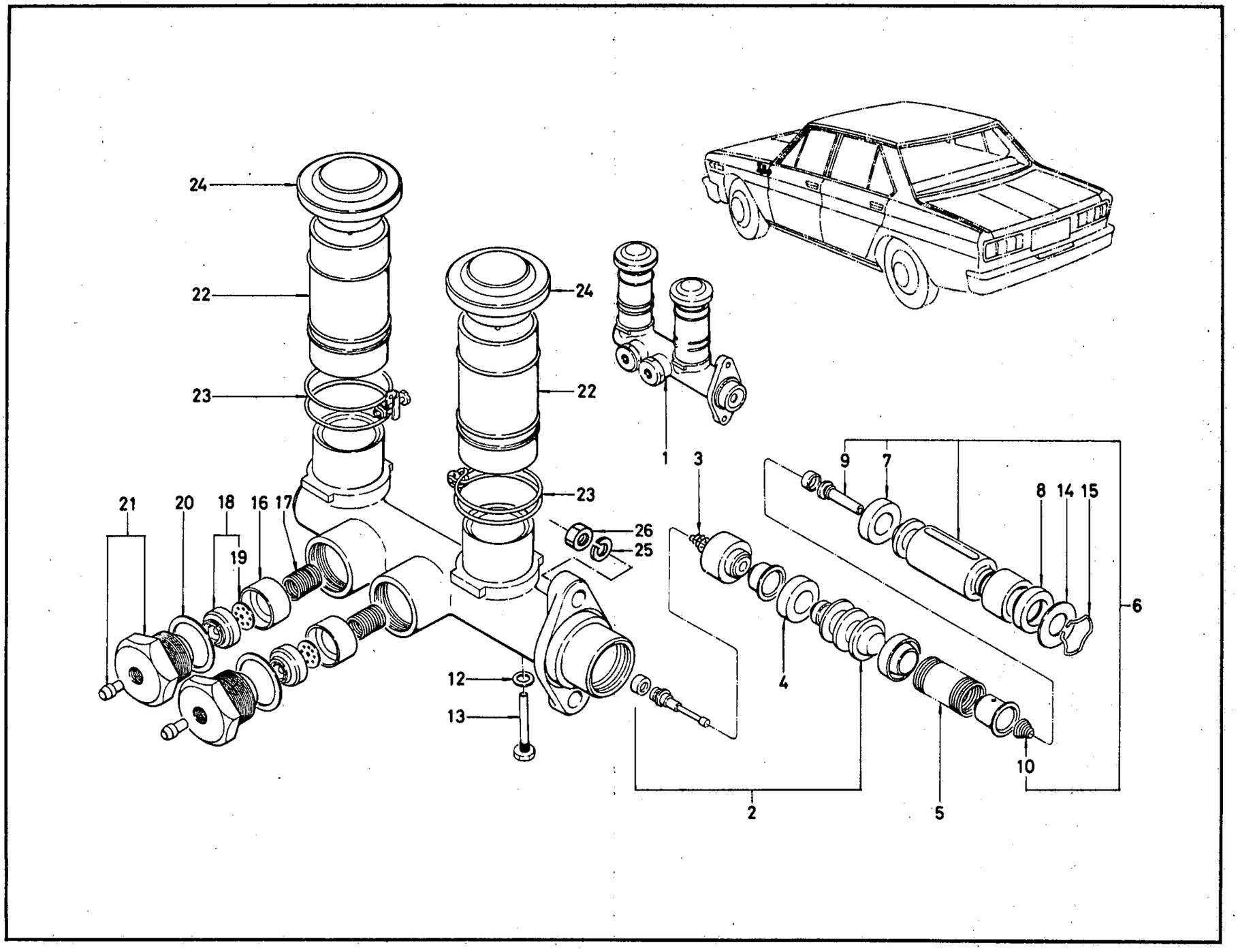

ILLUSTRATION **196B**

© 1972 NISSAN MOTOR CO., LTD.

REVISED: DECEMBER, 1972

PRINTED IN JAPAN

BRAKE MASTER CYLINDER (TANDEM) ('69 YEAR MODEL)

S	KEY NO.	PART NO.	DESCRIPTION	Q'TY	UNIT PKG FOR DIST.	APPLIED MODEL	APPLIED DATE FROM	APPLIED DATE UP TO	ICA N	ICA F	SUPERSEDED
*	101	46010-E0200	ASSY-CYLINDER BRAKE MASTER TANDEM FOR 6" M/VAC	1	1	SUPER DELUXE		0969			
	02	46010-E0201	ASSY-CYLINDER BRAKE MASTER TANDEM FOR 6" M/VAC	1	1	SUPER DELUXE		0969	Y	N	46010-E0200
	03	46010-E0202	ASSY-CYL.B/M TANDEM 6" M/VAC FOR NORWAY & BELGIUM	1		SUPER DELUXE					
	201	46063-E0210	ASSY-PISTON 'A'	1	5	SUPER DELUXE		0969			
	301	46056-73010	SPRING-VALVE	1	10	SUPER DELUXE		0969			
	401	46078-10611	CUP-PISTON	2	10	SUPER DELUXE		0969			
	501	46075-73010	SPRING-CYLINDER	1	5	SUPER DELUXE		0969			
	601	46063-E0211	ASSY-PISTON 'B'	1	5	SUPER DELUXE		0969			
	701	46068-10611	CUP-PISTON 'S'	1	10	SUPER DELUXE		0969			
	801	46078-10611	CUP-PISTON(P)	1	10	SUPER DELUXE		0969			
	901	46073-10610	ASSY-VALVE INLET	1	10	SUPER DELUXE		0969			
	1001	46056-73010	SPRING-VALVE INLET	1	10	SUPER DELUXE		0969			
	1101	46062-73010	RETAINER-SPRING	1	5	SUPER DELUXE		0969			
	1201	46079-10610	PACKING	1	10	SUPER DELUXE		0969			
	1301	46070-69010	SCREW-STOPPER	1	10	SUPER DELUXE		0969			
	1401	46072-73010	STOPPER	1	10	SUPER DELUXE		0969			
	1501	46071-27260	RING-SNAP	1	50	SUPER DELUXE		0969			
	1601	46059-69010	SEAT-VALVE	2	10	SUPER DELUXE		0969			
*	1701	46027-73010	SPRING-VALVE	2	10	SUPER DELUXE		0969			
	02	46027-A6900	SPRING-VALVE	2	5	SUPER DELUXE		0969	Y	N	46027-73010
	1801	46050-73010	ASSY-VALVE	2	10	SUPER DELUXE		0969			

NOTE:

REVISED: DECEMBER, 1972

© 1972 NISSAN MOTOR CO., LTD.

PRINTED IN JAPAN

BRAKE MASTER CYLINDER (TANDEM) ('69 YEAR MODEL)

S	KEY NO.	PART NO.	DESCRIPTION	Q'TY	UNIT PKG FOR DIST.	APPLIED MODEL	APPLIED DATE FROM	APPLIED DATE UP TO	ICA N	ICA F	SUPERSEDED
	1301	46057-10610	RETAINER-VALVE	2	10	SUPER DELUXE		0969			
	2001	46036-30100	GASKET-CAP VALVE	2	10	SUPER DELUXE		0969			
	2101	46038-E0110	CAP-VALVE	2		SUPER DELUXE		0969			
	2201	46091-E0310	RESERVOIR-BRAKE OIL	2	5	SUPER DELUXE		0969			
	2301	46016-10610	ASSY-BAND OIL RESERVOIR	1	5	SUPER DELUXE		0969			
	2401	46020-10611	SET-CAP OIL RESERVOIR	2	5	SUPER DELUXE		0969			
	2501	00915-21510	WASHER-LOCK	2	50	SUPER DELUXE		0969			
	2601	00911-14510	NUT	1	50	SUPER DELUXE		0969			
•	2701	46010-73027	KIT-A REPAIR FOR BRAKE TANDEM MASTER CYLINDER	1	1	SUPER DELUXE		0969			
	02	46010-E0127	KIT-A REPAIR FOR BRAKE TANDEM MASTER CYL	1	1	SUPER DELUXE		0969	Y	N	46010-73027
	2901	46010-E0129	KIT-B REPAIR FOR BRAKE TANDEM MASTER	1	1	SUPER DELUXE		0969	Y	N	46010-E0128
•	02	46010-E0220	KIT-B REPAIR FOR BRAKE TANDEM MASTER	1	1	SUPER DELUXE		0969			
	03	46010-E0229	KIT-B REPAIR FOR BRAKE TANDEM MASTER	1	1	SUPPER DELUXE		0969	Y	N	46010-E0228

NOTE:

© 1972 NISSAN MOTOR CO., LTD.

REVISED: DECEMBER, 1972

PRINTED IN JAPAN

C

NOTE

Printed in Japan

NISSAN MOTOR CO., LTD.

BRAKE MASTER CYLINDER (TANDEM) ('70 YEAR MODEL)

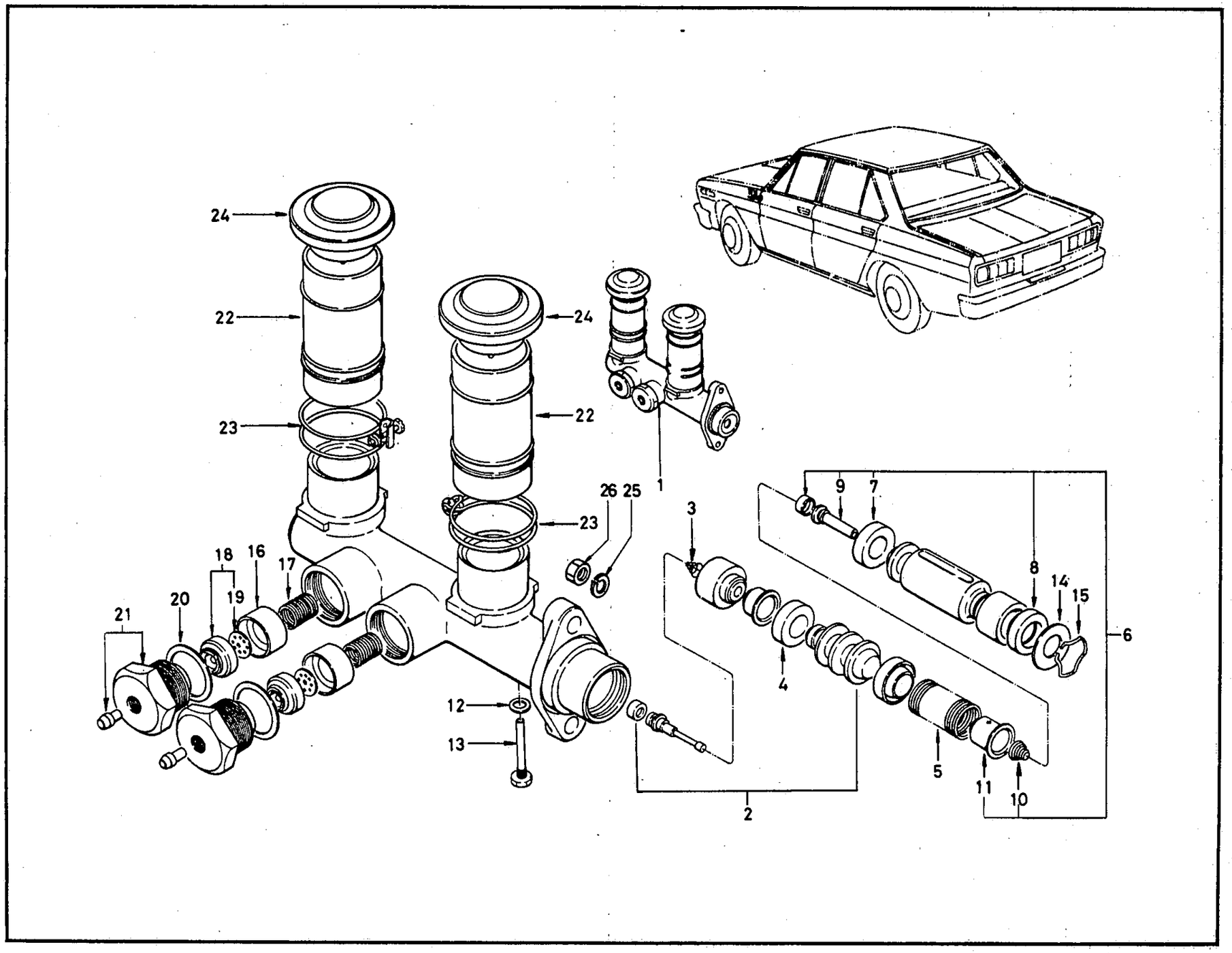

ILLUSTRATION **196c**

© 1972 NISSAN MOTOR CO., LTD.

REVISED: DECEMBER, 1972

PRINTED IN JAPAN

BRAKE MASTER CYLINDER [TANDEM] ('70 YEAR MODEL)

S	KEY NO.	PART NO.	DESCRIPTION	Q'TY	UNIT PKG FOR DIST.	APPLIED MODEL	APPLIED DATE FROM	APPLIED DATE UP TO	ICA N	ICA F	SUPERSEDED
•	101	46010-E0200	ASSY-CYLINDER BRAKE MASTER TANDEM FOR 6" M/VAC	1	1	OP P-DX STD DIESEL(RD) W & V	1069				
	02	46010-E0201	ASSY-CYLINDER BRAKE MASTER TANDEM FOR 6" M/VAC	1	1	OP P-DX STD DIESEL(RD) W & V	1069		Y	N	46010-E0200
	201	46063-E0210	ASSY-PISTON 'A'	1	5	OP P-DX STD DIESEL(RD) W & V	1069				
	02	46063-E0212	ASSY-PISTON 'A'	1	5	OP P-DX STD DIESEL(RD) W & V	1069				
	301	46056-73010	SPRING-VALVE	1	10	OP P-DX STD DIESEL(RD) W & V	1069				
	401	46078-10611	CUP-PISTON	2	10	OP P-DX STD DIESEL(RD) W & V	1069				
	501	46075-73010	SPRING-CYLINDER	1	5	OP P-DX STD DIESEL(RD) W & V	1069				
	601	46063-E0211	ASSY-PISTON 'B'	1	5	OP P-DX STD DIESEL(RD) W & V	1069				
	701	46068-10611	CUP-PISTON 'S'	1	10	OP P-DX STD DIESEL(RD) W & V	1069				
	801	46078-10611	CUP-PISTON (P)	1	10	OP P-DX STD DIESEL(RD) W & V	1069				
	901	46073-10610	ASSY-VALVE INLET	1	10	OP P-DX STD DIESEL(RD) W & V	1069				
	1001	46056-73010	SPRING-VALVE INLET	1	10	OP P-DX STD DIESEL(RD) W & V	1069				
	1101	46062-73010	RETAINER-SPRING	1	5	OP P-DX STD DIESEL(RD) W & V	1069				
	1201	46079-10610	PACKING	1	10	OP P-DX STD DIESEL(RD) W & V	1069				
	1301	46070-69010	SCREW-STOPPER	1	10	OP P-DX STD DIESEL(RD) W & V	1069				

NOTE:

© 1972 NISSAN MOTOR CO., LTD.

PRINTED IN JAPAN

BRAKE MASTER CYLINDER (TANDEM) ('70 YEAR MODEL)

S	KEY NO.	PART NO.	DESCRIPTION	Q'TY	UNIT PKG FOR DIST.	APPLIED MODEL	APPLIED DATE FROM	APPLIED DATE UP TO	ICA N	ICA F	SUPERSEDED
	1401	46072-73010	STOPPER	1	10	OP P-DX STD DIESEL(RD) W & V	1069				
	1501	46071-27260	RING-SNAp	1	50	Op p-DX STD DIESEL(RD) W & V	1069				
	1601	46059-69010	SEAT-VALVE	2	10	Op p-DX STD DIESEL(RD) W & V	1069				
•	1701	46027-73010	SpRING-VALVE	2	10	Op p-DX STD DIESEL(RD) W & V	1069				
	02	46027-A6900	SpRING-VALVE	2	5	Op p-DX STD DIESEL(RD) W & V	1069		Y	N	46027-73010
	1801	46050-73010	ASSY-VALVE	2	10	Op p-DX STD DIESEL(RD) W & V	1069				
	1901	46057-10610	RETAINER-VALVE	2	10	Op p-DX STD DIESEL(RD) W & V	1069				
	2001	46036-30100	CASKET-CAp VALVE	2	10	Op p-DX STD DIESEL(RD) W & V	1069				
	2101	46038-E0110	CAp-VALVE	2		Op p-DX STD DIESEL(RD) W & V	1069				
	2201	46091-E0310	RESERVOIR-BRAKE OIL	2	5	Op p-DX STD DIESEL(RD) W & V	1069				
	2301	46016-10610	ASSY-BAND OIL RESERVOIR	2	5	Op p-DX STD DIESEL(RD) W & V	1069				
	2401	46020-10611	SET-CAP-OIL RESERVOIR	2	5	Op p-DX STD DIESEL(RD) W & V	1069				
	2501	00915-21510	WASHER-LOCK	2	50	Op p-DX STD DIESEL(RD) W & V	1069				
	2601	00911-14510	NUT	2	50	Op p-DX STD DIESEL(RD) W & V	1069				
•	2701	46010-73027	KIT-A REpAIR FOR BRAKE TANDEM MASTER CYLINDER	1	1	Op p-DX STD DIESEL(RD) W & V	1069				

NOTE:

ILLUSTRATION **196c**

© 1972 NISSAN MOTOR CO., LTD.

REVISED: DECEMBER, 1972

PRINTED IN JAPAN

BRAKE MASTER CYLINDER (TANDEM) ('70 YEAR MODEL)

S	KEY NO.	PART NO.	DESCRIPTION	Q'TY	UNIT PKG FOR DIST.	APPLIED MODEL	APPLIED DATE FROM	APPLIED DATE UP TO	ICA N	ICA F	SUPERSEDED
	2702	46010-E0127	KIT-A REPAIR FOR BRAKE TANDEM MASTER CYLINDER	1	1	OP P-DX STD DIESEL(RD) W & V	1069		Y	N	46010-E0127
*	2801	46010-E0226	KIT-B REPAIR FOR BRAKE TANDEM MASTER CYLINDER	1	1	Op p-DX STD DIESEL(RD) W & V	1069				
	02	46010-E0229	KIT-B REPAIR FOR BRAKE TANDEM MASTER CYLINDER	1	1	Op p-DX STD DIESEL(RD) W & V	1069		Y	N	46010-E0228

NOTE:

REVISED: DECEMBER, 1972

© 1972 NISSAN MOTOR CO., LTD.

PRINTED IN JAPAN

NOTE

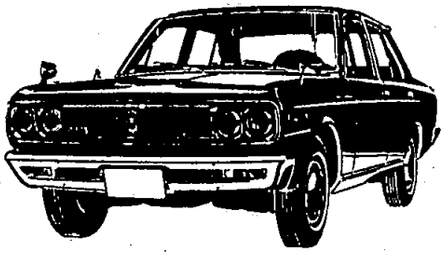

NISSAN MOTOR CO., LTD.

Printed in Japan

NOTE

Printed in Japan

NISSAN MOTOR CO., LTD.

BRAKE MASTER CYLINDER (TANDEM) ('69 YEAR MODEL)

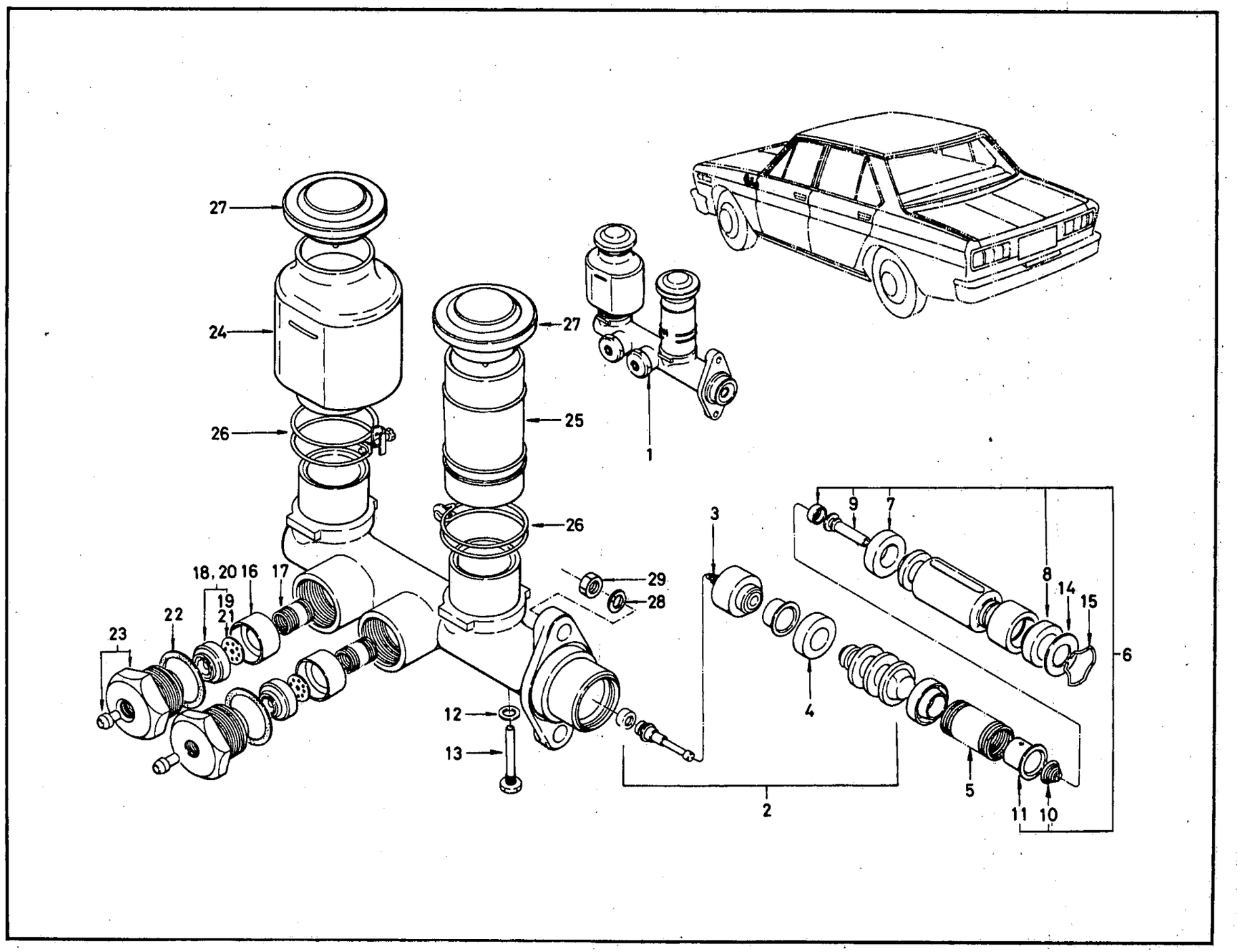

© 1972 NISSAN MOTOR CO., LTD.

REVISED: DECEMBER, 1972

PRINTED IN JAPAN

BRAKE MASTER CYLINDER (TANDEM) ('69 YEAR MODEL)

S	KEY NO.	PART NO.	DESCRIPTION	Q'TY	UNIT PKG FOR DIST.	APPLIED MODEL	APPLIED DATE FROM	APPLIED DATE UP TO	ICA N	ICA F	SUPERSEDED
*	101	46010-E0100	ASSY-CYLINDER BRAKE MASTER TANDEM W/9" MASTER VAC	1	1	OP SUPER		0969			
	02	46010-E0101	ASSY-CYLINDER BRAKE MASTER TANDEM W/9" MASTER VAC	1	1	OP SUPER		0969	Y	N	46010-E0100
	201	46063-E0110	ASSY-PISTON(A)	1	5	OP SUPER		0969			
	02	46063-E0212	ASSY-PISTON(A)	1	5	OP SUPER		0969	Y	N	46063-E0110
	301	46056-73010	SPRING-VALVE	1	10	OP SUPER		0969			
	401	46078-10611	CUP-PISTON	2	10	OP SUPER		0969			
	501	46075-73010	SPRING-CYLINDER	1	5	OP SUPER		0969			
	601	46063-E0211	ASSY-PISTON(B)	1	5	OP SUPER		0969			
	701	46068-10611	CUP-PISTON(S)	1	10	OP SUPER		0969			
	801	46078-10611	CUP-PISTON(P)	1	10	OP SUPER		0969			
	901	46073-10610	ASSY-VALVE INLET	1	10	OP SUPER		0969			
	1001	46056-73010	SPRING-VALVE INLET	1	10	OP SUPER		0969			
	1101	46062-73010	RETAINER SPRING	1	5	OP SUPER		0969			
	1201	46079-10610	PACKING	1	10	OP SUPER		0969			
	1301	46070-69010	SCREW-STOPPER	1	10	OP SUPER		0969			
	1401	46072-73010	STOPPER	1	10	OP SUPER		0969			
	1501	46071-27260	RING-SNAP	1	50	OP SUPER		0969			
	1601	46059-69010	SEAT-VALVE	2	10	OP SUPER		0969			
*	1701	46027-73010	SPRING-VALVE	2	10	OP SUPER		0969			
	02	46027-A6900	SPRING-VALVE	2	5	OP SUPER		0969	Y	N	46027-73010
	1801	46050-73010	ASSY-VALVE	2	10	OP SUPER		0969			
	1901	46057-10610	RETAINER VALVE	2	10	OP SUPER		0969			

NOTE:

PRINTED IN JAPAN

REVISED: DECEMBER, 1972

© 1972 NISSAN MOTOR CO., LTD.

BRAKE MASTER CYLINDER (TANDEM) ('69 YEAR MODEL)

S	KEY NO.	PART NO.	DESCRIPTION	Q'TY	UNIT PKG FOR DIST.	APPLIED MODEL	APPLIED DATE FROM	APPLIED DATE UP TO	ICA N	ICA F	SUPERSEDED
	2001	- 46050-73410	ASSY-VALVE	2	5	OP SUPER		0969			
	2101	- 46057-73410	RETAINER	2	10	OP SUPER		0969	Y	Y	46038-69010
	2201	- 46036-30100	GASKET-CAP VALVE	2	10	OP SUPER		0969			
	2301	- 46038-69010	CAP-VALVE	2	5	OP SUPER		0969			
	02	- 46038-E0110	CAP-VALVE	2		OP SUPER		0969			
	2401	- 46090-25510	RESERVOIR-BRAKE OIL(F)	1	1	OP SUPER		0969			
	2501	- 46091-E0310	RESERVOIR-BRAKE OIL(R)	1	5	OP SUPER		0969			
	2601	- 46016-10610	ASSY-BRAND OIL RESERVOIR	2	5	OP SUPER		0969			
	2701	- 46020-10611	SET-CAP OIL RESERVOIR	2	5	OP SUPER		0969			
	2801	- 00915-21510	WASHER-LOCK	2	50	OP SUPER		0969			
	2901	- 00911-14510	NUT	2	50	OP SUPER		0969			

NOTE:

© 1972 NISSAN MOTOR CO., LTD.

REVISED: DECEMBER, 1972
PRINTED IN JAPAN

NOTE

Printed in Japan

NISSAN MOTOR CO., LTD.

BRAKE MASTER CYLINDER (TANDEM) ('70 YEAR MODEL)

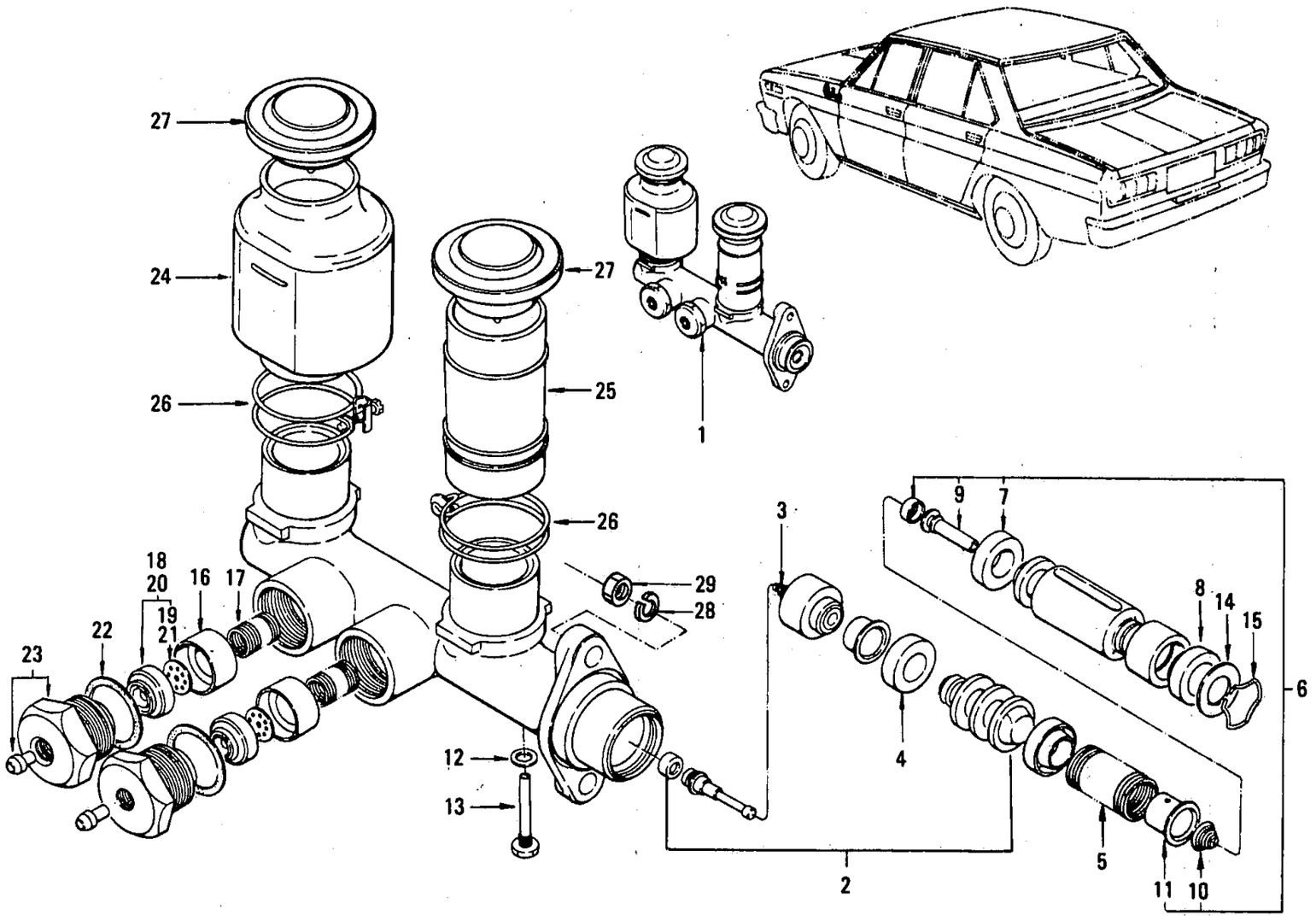

© 1972 NISSAN MOTOR CO., LTD.

REVISED: DECEMBER, 1972

PRINTED IN JAPAN

C

BRAKE MASTER CYLINDER (TANDEM) ('70 YEAR MODEL)

S	KEY NO.	PART NO.	DESCRIPTION	Q'TY	UNIT PKG FOR DIST.	APPLIED MODEL	APPLIED DATE FROM	APPLIED DATE UP TO	ICA N	ICA F	SUPERSEDED
*	101	46010-E0100	ASSY-CYL BRAKE M/T WITH 9" M/V '69 YEAR MODEL	1	1	SUPER CUSTOM	1069				
	02	46010-E0101	ASSY-CYL BRAKE M/T WITH 9" M/V '69 YEAR MODEL	1	1	SUPER CUSTOM	1069		Y	N	46010-E0100
	201	46063-E0110	ASSY-PISTON A '69 YEAR MODEL	1	5	SUPER CUSTOM	1069				
	02	46063-E0111	ASSY-PISTON A '69 YEAR MODEL	1	5	SUPER CUSTOM	1069				
	301	46056-73010	SPRING-VALVE	1	10	SUPER CUSTOM	1069				
	401	46078-10611	CUP-PISTON	2	10	SUPER CUSTOM	1069				
	501	46075-73010	SPRING-CYLINDER	1	5	SUPER CUSTOM	1069				
	601	46063-E0211	ASSY-PISTON B	1	5	SUPER CUSTOM	1069				
	701	46068-10611	CUP-PISTON S	1	10	SUPER CUSTOM	1069				
	801	46078-10611	CUP-PISTON P	1	10	SUPER CUSTOM	1069				
	901	46073-10610	ASSY-VALVE	1	10	SUPER CUSTOM	1069				
	1001	46056-73010	SPRING-VALVE INLET	1	10	SUPER CUSTOM	1069				
	1101	46062-73010	RETAINER SPRING	1	5	SUPER CUSTOM	1069				
	1201	46079-10610	PACKING	1	10	SUPER CUSTOM	1069				
	1301	46070-69010	SCREW	1	10	SUPER CUSTOM	1069				
	1401	46072-73010	STOPPER	1	10	SUPER CUSTOM	1069				
	1501	46071-27260	RING-SNAP	1	50	SUPER CUSTOM	1069				
	1601	46059-69010	SEAT-VALVE	1	10	SUPER CUSTOM	1069				
*	1701	46027-73010	SPRING-VALVE	1	10	SUPER CUSTOM	1069				
	02	46027-A6900	SPRING-VALVE	2	5	SUPER CUSTOM	1069		C	N	46027-73010
	1801	46050-73010	ASSY-VALVE	1	10	SUPER CUSTOM	1069				
	1901	46057-10610	RETAINER-VALVE	1	10	SUPER CUSTOM	1069				

NOTE:

© 1972 NISSAN MOTOR CO., LTD.

PRINTED IN JAPAN

BRAKE MASTER CYLINDER (TANDEM) ('70 YEAR MODEL)

S	KEY NO.	PART NO.	DESCRIPTION	Q'TY	UNIT PKG FOR DIST.	APPLIED MODEL	APPLIED DATE FROM	APPLIED DATE UP TO	ICA N	ICA F	SUPERSEDED
	2001	46050-73410	ASSY-VALVE	1	5	SUPER CUSTOM	1069				
	2101	46057-73410	RETAINER	1	10	SUPER CUSTOM	1069				
	2201	46036-30100	GASKET-CAP VALVE	2	10	SUPER CUSTOM	1069				
	2301	46038-69010	CAP-VALVE	2	5	SUPER CUSTOM	1069				
	2401	46090-25510	RESERVOIR-BRAKE OIL F	1	1	SUPER CUSTOM	1069				
	2501	46091-E0310	RESERVOIR-BRAKE OIL R	1	5	SUPER CUSTOM	1069				
	2601	46016-10610	ASSY-BAND OIL RESERVOIR	2	5	SUPER CUSTOM	1069				
	2701	46020-10611	SET CAP-OIL RESERVOIR	2	5	SUPER CUSTOM	1069				
	2801	00915-21510	WASHER-LOCK	2	50	SUPER CUSTOM	1069				
	2901	00911-14510	NUT	2	50	SUPER CUSTOM	1069				

NOTE:

© 1972 NISSAN MOTOR CO., LTD.

REVISED: DECEMBER, 1972
PRINTED IN JAPAN

NOTE

Printed in Japan

NISSAN MOTOR CO., LTD.

MASTER VAC (6" SIZE)

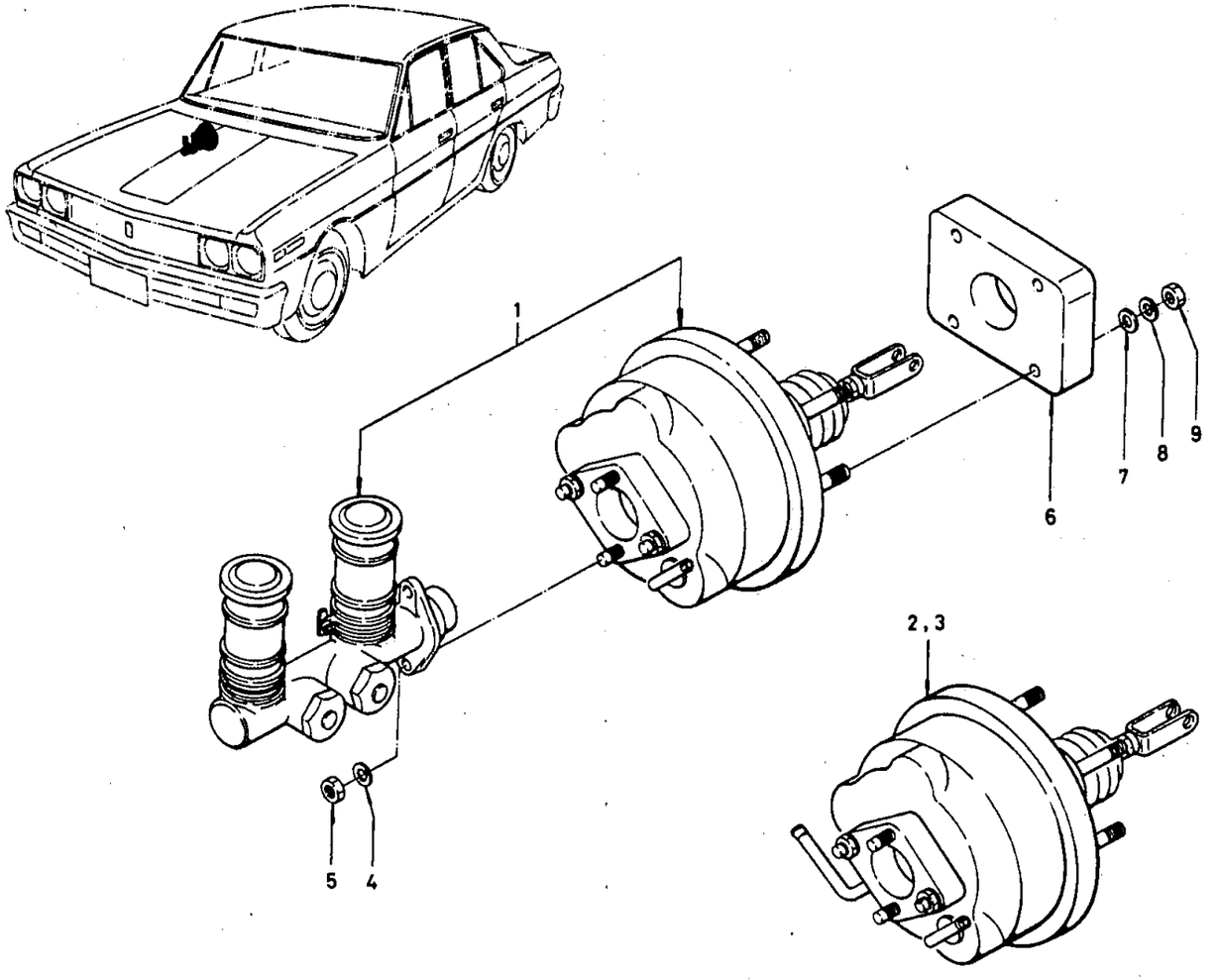

© 1972 NISSAN MOTOR CO., LTD.

REVISED: DECEMBER, 1972

PRINTED IN JAPAN

MASTER VAC (6" SIZE)

S	KEY NO.	PART NO.	DESCRIPTION	Q'TY	UNIT PKG FOR DIST.	APPLIED MODEL	APPLIED DATE FROM	APPLIED DATE UP TO	ICA N	ICA F	SUPERSEDED
	101	47200-E1800	ASSY-MASTER VAC 6" & MASTER	1		SUPER DELUXE LD		0969			
•	02	47200-E1400	ASSY-MASTER VAC 6" & MASTER	1		OP PERSONAL WAGON VAN LD		0969			
	03	47200-E1800	ASSY-MASTER VAC 6" & MASTER	1		OP L DRIVE	1069				
	201	47210-E0200	ASSY-MASTER VAC 6"	1	1	SUPER DELUXE RD		0969			
	02	47210-E0400	ASSY-MASTER VAC 6"	1	1	OP P-2300 P-2000 WAGON(RD)		0969			
	03	47210-E0200	ASSY-MASTER VAC 6"	1	1	OP P-DX STD W & V (RD)	1069				
	301	47210-E1800	ASSY-MASTER VAC 6"	2	1	SUPER DELUXE		0969			
	02	47210-E1400	ASSY-MASTER VAC 6"	1	1	OP P-2300 P-2000 WAGON(LD)		0969			
	03	47210-E1800	ASSY-MASTER VAC 6"	1	1	OP P-DX STD W & V (LD)	1069				
	401	00915-21510	WASHER-LOCK 5/16	2	50	SUPER DELUXE OP ALL EXC DELUXE		0969			
	02	00915-21510	WASHER-LOCK 5/16	2	50	OP ALL EXC DIESEL LD SUPER CUSTOM	1069				
	501	00911-14510	NUT-HEX 5/16-24	2	50	SUPER DELUXE OP ALL EXC SUPER DELUXE		0969			
	02	00911-14510	NUT-HEX 5/16-24	2	50	OP ALL EXC DIESEL LD SUPER CUSTOM	1069				
	601	47211-E0200	SPACER-MASTER VAC	1	1	SUPER DELUXE OP ALL EXC SUPER DELUXE		0969			
	02	47211-E0200	SPACER-MASTER VAC	1	1	OP ALL EXC DIESEL LD SUPER CUSTOM	1069				

NOTE:

REVISED: DECEMBER, 1972

© 1972 NISSAN MOTOR CO., LTD.

PRINTED IN JAPAN

MASTER VAC (6" SIZE)

S	KEY NO.	PART NO.	DESCRIPTION	Q'TY	UNIT PKG FOR DIST.	APPLIED MODEL	APPLIED DATE FROM	APPLIED DATE UP TO	ICA N	ICA F	SUPERSEDED
	701	00915-41510	WASHER-PLAIN 5/16	4	50	SUPER DELUXE OP ALL EXC SUPER DELUXE		0969			
	02	00915-41510	WASHER-PLAIN 5/16	4	50	OP ALL EXC DIESEL LD SUPER CUSTOM	1069				
	801	00915-21510	WASHER-LOCK 5/16	4	50	SUPER DELUXE OP ALL EXC SUPER DELUXE		0969			
	02	00915-21510	WASHER-LOCK 5/16	4	50	OP ALL EXC DIESEL LD SUPER CUSTOM	1069				
	901	00911-14510	NUT-HEX 5/16-24	4	50	SUPER DELUXE OP ALL EXC SUPER DELUXE					
	02	00911-14510	NUT-HEX 5/16-24	4	50	OP ALL EXC DIESEL LD SUPER CUSTOM	1069				

NOTE:

© 1972 NISSAN MOTOR CO., LTD.

PRINTED IN JAPAN

NOTE

Printed in Japan

NISSAN MOTOR CO., LTD.

MASTER VAC (9" SIZE)

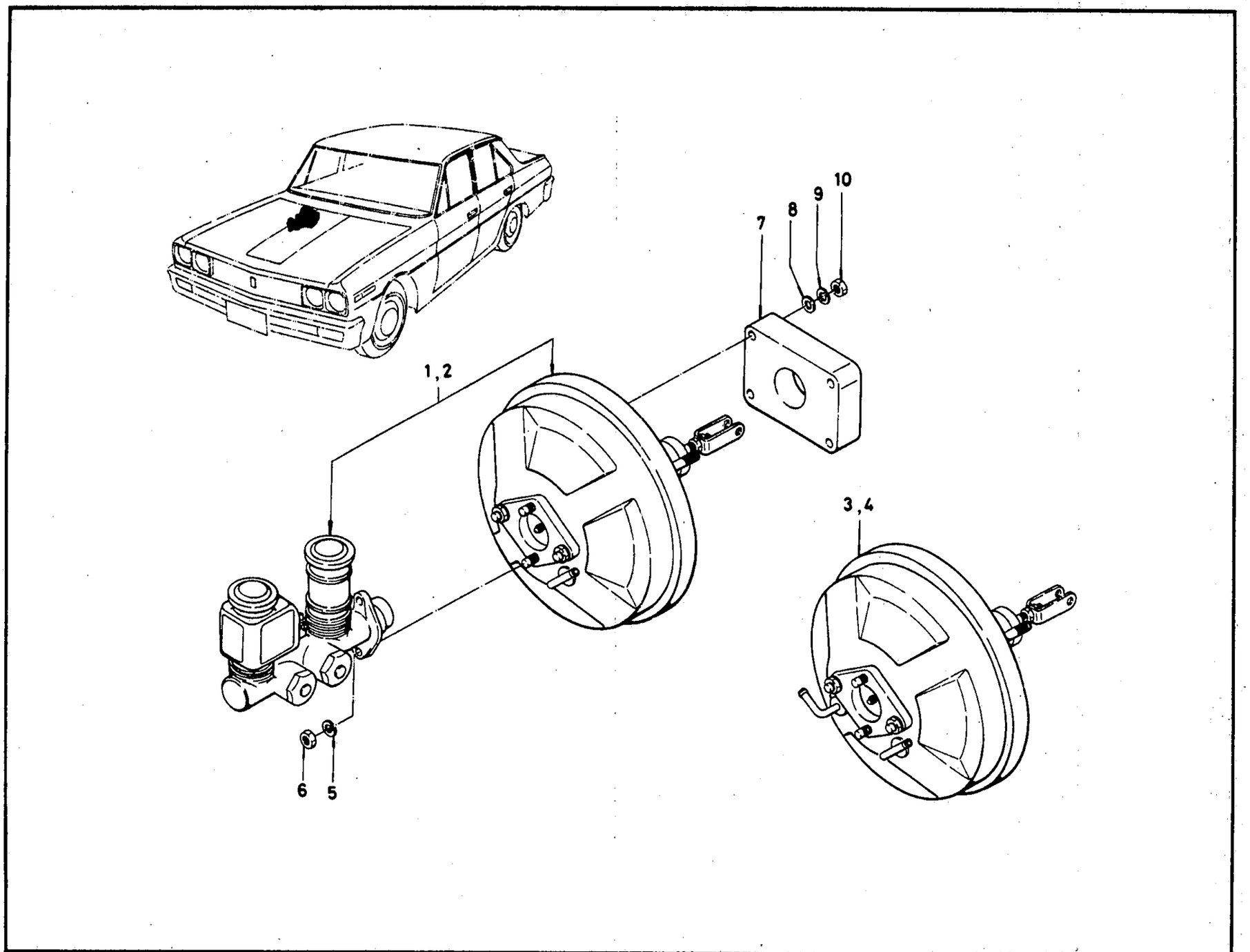

ILLUSTRATION **197A**

© 1972 NISSAN MOTOR CO., LTD.

REVISED: DECEMBER, 1972

PRINTED IN JAPAN

C

MASTER VAC (9" SIZE)

S	KEY NO.	PART NO.	DESCRIPTION	Q'TY	UNIT PKG FOR DIST.	APPLIED MODEL	APPLIED DATE FROM	APPLIED DATE UP TO	ICA N	ICA F	SUPERSEDED
	101	47200-E0100	ASSY-MASTER VAC 9" & MASTER CYLINDER'69 YEAR MODEL	1		OP SUPER PERSONAL DELUXE RD		0969			
	02	47200-E0100	ASSY-MASTER VAC 9" & MASTER CYLINDER'70 YEAR MODEL	1		SUPER CUSTOM RD OP P-DX RD	1069				
•	201	47200-E1200	ASSY-MASTER VAC 9" & MASTER CYLINDER'69 YEAR MODEL	1		OP SUPER PERSONAL DELUXE LD		0969			
•	02	47200-E1200	ASSY-MASTER VAC 9" & MASTER CYLINDER'70 YEAR MODEL	1		SUPER CUSTOM LD OP P-DX LD	1069				
	301	47210-E0100	ASSY-MASTER VAC 9" '69 YEAR MODEL	1	1	OP SUPER(RD)		0969			
	02	47210-E0100	ASSY-MASTER VAC 9" '70 YEAR MODEL	1	1	SUPER CUSTOM(RD)	1069				
	401	47210-E1200	ASSY-MASTER VAC 9" '69 YEAR MODEL	1	1	OP SUPER					
	02	47210-E1200	ASSY-MASTER VAC 9" '70 YEAR MODEL	1	1	SUPER CUSTOM(LD)	1069				
	501	00915-21510	WASHER-LOCK 5/16 '69 YEAR MODEL	2	50	OP SUPER DELUXE		0969			
	02	00915-21510	WASHER-LOCK 5/16 '70 YEAR MODEL	2	50	SUPER CUSTOM					
	601	00911-14510	NUT-HEX 5/16-24 '69 YEAR MODEL	2	50	OP SUPER DELUXE		0969			
	02	00911-14510	NUT-HEX 5/16-24 '70 YEAR MODEL	2	50	SUPER CUSTOM					
	701	47211-E0100	SPACER-MASTER VAC '69 YEAR MODEL	1	1	OP SUPER DELUXE		0969			
	02	47211-E0100	SPACER-MASTER VAC '70 YEAR MODEL	1	1	SUPER CUSTOM	1069				
	801	00915-41510	WASHER-PLAIN 5/16 '69 YEAR MODEL	4	50	OP SUPER DELUXE		0969			

NOTE:

REVISED: DECEMBER, 1972

© 1972 NISSAN MOTOR CO., LTD.

PRINTED IN JAPAN

MASTER VAC (9" SIZE)

S	KEY NO.	PART NO.	DESCRIPTION	Q'TY	UNIT PKG FOR DIST.	APPLIED MODEL	APPLIED DATE FROM	APPLIED DATE UP TO	ICA N	ICA F	SUPERSEDED
	802	- 00915-41510	WASHER-PLAIN 5/16 '70 YEAR MODEL	4	50	SUPER CUSTOM	1069				
	901	- 00915-21510	WASHER-LOCK 5/16 '69 YEAR MODEL	4	50	OP SUPER DELUXE		0969			
	02	- 00915-21510	WASHER-LOCK 5/16 '70 YEAR MODEL	4	50	SUPER CUSTOM	1069				
	1001	- 00911-14510	NUT-HEX 5/16-24 '69 YEAR MODEL	4	50	OP SUPER DELUXE		0969			
	02	- 00911-14510	NUT-HEX 5/16-24 '70 YEAR MODEL	4	50	SUPER CUSTOM	1069				

NOTE:

ILLUSTRATION **197A**

© 1972 NISSAN MOTOR CO., LTD.

REVISED: DECEMBER, 1972

PRINTED IN JAPAN

C

NOTE

Printed in Japan

NISSAN MOTOR CO., LTD.

MASTER VAC HOSE (R DRIVE)

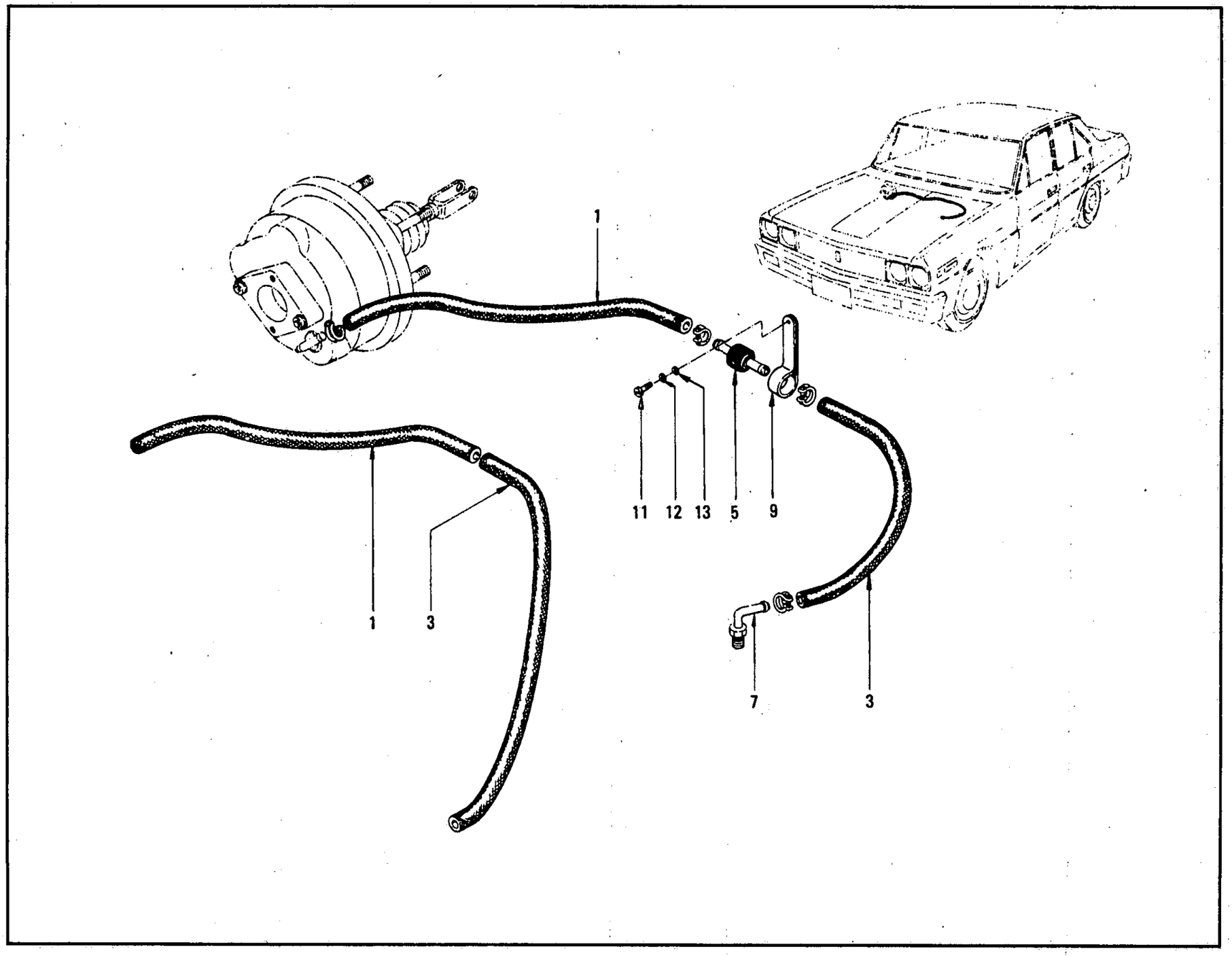

ILLUSTRATION **198-1**

© 1972 NISSAN MOTOR CO., LTD.

REVISED: DECEMBER, 1972

PRINTED IN JAPAN

MASTER VAC HOSE (L DRIVE)

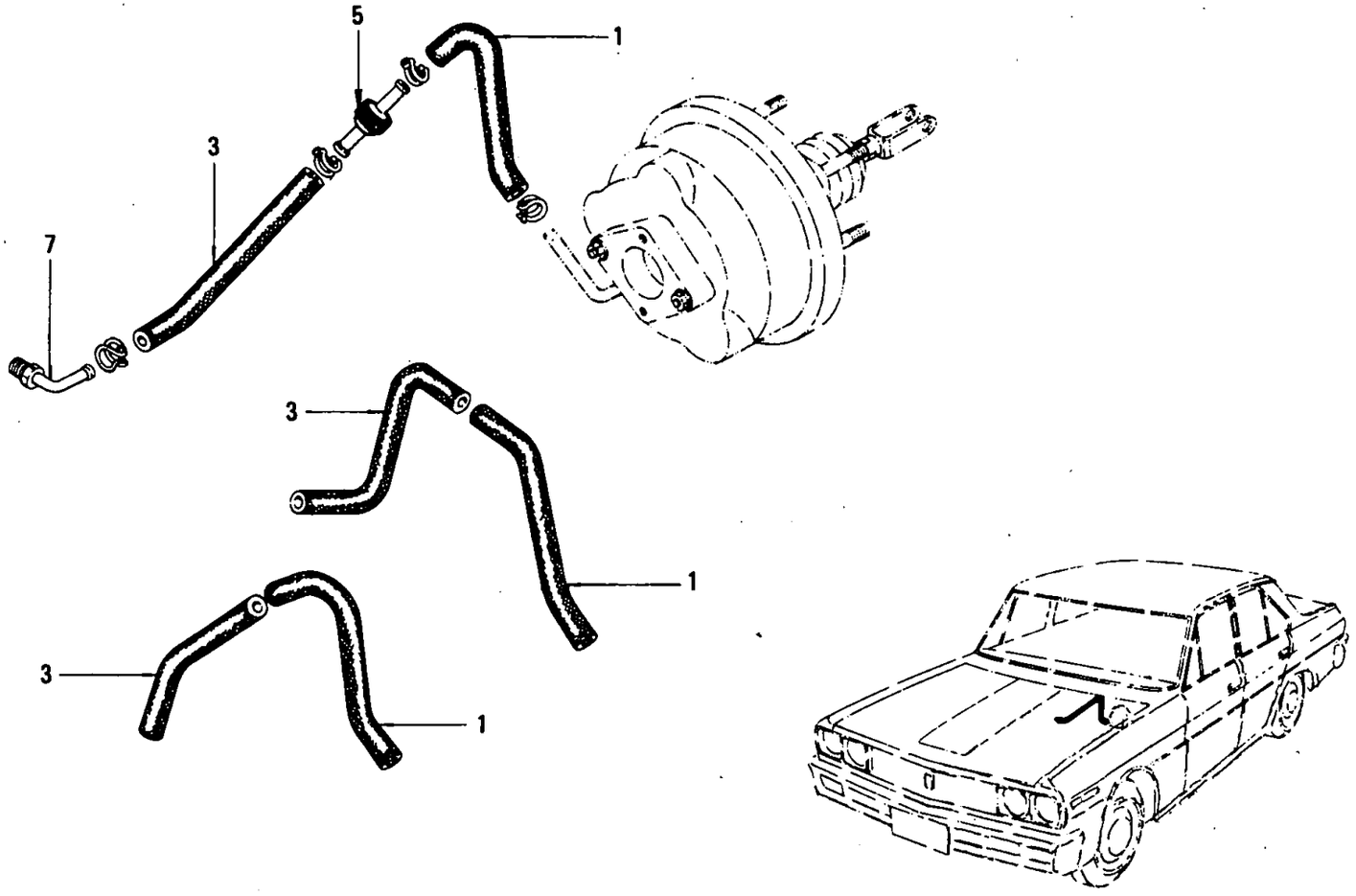

PRINTED IN JAPAN

© 1972 NISSAN MOTOR CO., LTD.

MASTER VAC HOSE

S	KEY NO.	PART NO.	DESCRIPTION	Q'TY	UNIT PKG FOR DIST.	APPLIED MODEL	APPLIED DATE FROM	APPLIED DATE UP TO	ICA N	ICA F	SUPERSEDED
	101	47471-E1800	HOSE-VAC MASTER VAC SIDE '69 YEAR MODEL	1	5	SUPER LD		0969			
•	02	47471-E0100	HOSE-VAC MASTER VAC SIDE	1	5	SPER CUSTOM DX RD OP RD					
	03	47471-E3200	HOSE-VAC MASTER VAC SIDE	1	5	SUPER CUSTOM DX RD OP RD		0969	Y	N	47471-E0100
	04	47471-E1310	HOSE-VAC MASTER VAC SIDE	1	5	OP STD LD					
	05	47471-E1200	HOSE-VAC MASTER VAC SIDE '69 YEAR MODEL	1	5	DIESEL LD		0969			
	06	47471-E3300	HOSE-VAC MASTER VAC SIDE '70 YEAR MODEL	1	5	SUPER LD OP CUSTOM P-DX2400 W VAN-DX					
	201	47472-E0900	HOSE-VAC M/V TO TANK	1	5	OP DIESEL RD					
	301	47474-E1800	HOSE-VAC ENG SIDE '69 YEAR MODEL	1	5	SUPER LD		0969			
	02	47474-E0600	HOSE-VAC ENG SIDE '69 YEAR MODEL	1	5	SUPER RD OP P-2300 RD		0969			
	03	47474-E0200	HOSE-VAC ENG SIDE '69 YEAR MODEL	1	5	DELUXE RD OP P-2000 WAGON & VAN RD		0969			
	04	47474-E0700	HOSE-VAC ENG SIDE	1	5	OP DIESEL					
	05	47474-E1310	HOSE-VAC ENG SIDE	1	5	OP STD LD					
	06	47474-E1200	HOSE-VAC ENG SIDE '69 YEAR MODEL	1	5	DELUXE LD		0969			
	07	47474-E3000	HOSE-VAC ENG SIDE	1	5	SUPER CUSTOM RD OP P-DX WAGON & VAN-DX					
	08	47474-E1200	HOSE-VAC ENG SIDE '70 YEAR MODEL	1	5	SUPER LD OP P-DX MANUAL WAGON & VAN-DX	1069				

NOTE:

ILLUSTRATION **198**

© 1972 NISSAN MOTOR CO., LTD.

REVISED: DECEMBER, 1972

PRINTED IN JAPAN

MASTER VAC HOSE

S	KEY NO.	PART NO.	DESCRIPTION	Q'TY	UNIT PKG FOR DIST.	APPLIED MODEL	APPLIED DATE FROM	APPLIED DATE UP TO	ICA N	ICA F	SUPERSEDED
	401	47473-E0900	HOSE-VAC TANK TO CHECK VALVE	1	5	OP DIESEL RD					
	501	47474-E1200	ASSY-CHECK VALVE	1	5	SUPER DX LD OP CUSTOM P-DX WAGON LD AUTO					
•	02	47478-E1200	ASSY-CHECK VALVE	1	5	OP DIESEL RD					
•	03	47478-E3300	ASSY-CHECK VALVE	1	5	OP DIESEL R DRIVE	1069		Y	N	47478-E1200
	04	47478-P1700	ASSY-CHECK VALVE	1	5	OP DIESEL R DRIVE	1069		Y	N	47478-E3300
•	05	47478-E0100	ASSY-CHECK VALVE	1	5	SUPER CUSTOM DX RD OP P-DX W VAN-DX RD					
•	06	47478-E3200	ASSY-CHECK VALVE	1	5	SUPER CUSTOM DX RD OP P-DX WAGON VAN-DX R DRIVE	1069		Y	N	47478-E0100
	07	47478-P0100	ASSY-CHECK VALVE	1	5	SUPER CUSTOM DX RD OP P-DX W & V DX R DRIVE		0969	Y	N	47478-E3200
	601	47479-E0900	HOSE-VAC CHECK VALVE TO TANK	1	5	OP DIESEL RD					
	701	47475-E0610	CONN-VAC HOSE '69 YEAR MODEL	1	5	SUPER RD AUTO OP P-2300 AUTO		0969			
•	02	47475-73002	CONN-VAC HOSE	1	1	DX AUTO					
	03	47475-F0601	CONN-VAC HOSE	1	5	DX AUTO		0969	Y	N	47475-73002
	04	47475-E0210	CONN-VAC HOSE '69 YEAR MODEL	1	5	DX AUTO		0969	N	N	47475-73002
•	05	47475-73402	CONN-VAC HOSE '70 YEAR MODEL	1	1	OP P-DX VAN-DX RD MANUAL	1069				
•	06	47475-73403	CONN-VAC HOSE '70 YEAR MODEL	1	1	OP COSTUM P-DX W VAN-DX LD MANNUAL	1069				
	07	47475-E3300	CONNECTOR-VAC HOSE	1	5	OP CUSTOM P-DX WAGON VAN-DX LD M ANUAL	1069		Y	N	47475-73403

NOTE:

© 1972 NISSAN MOTOR CO., LTD.

PRINTED IN JAPAN

MASTER VAC HOSE

S	KEY NO.	PART NO.	DESCRIPTION	Q'TY	UNIT PKG FOR DIST.	APPLIED MODEL	APPLIED DATE FROM	APPLIED DATE UP TO	ICA N	ICA F	SUPERSEDED
•	708	47475-E3310	CONN-VAC HOSE '70 YEAR MODEL	1	5	OP P-DX2400 WAGON	1069				
	09	47475-E3311	CONNECTOR-VAC HOSE	1	5	OP P-DX2400 WAGON	1069		Y	N	47475-E3310
•	10	47475-73601	CONN-VAC HOSE '70 YEAR MODEL	1	1	OP DIESEL RD STD LD	1069				
	11	47475-E3400	CONN-VAC HOSE '70 YEAR MODEL	1	5	OP DIESEL RD STD LD	1069		Y	N	47475-73601
•	12	47475-F0700	CONN-VAC HOSE '70 YEAR MODEL	1	1	SUPER CUSTOM RD AUTO OP P-DX2400 W RD AUTO					
	13	47475-F0701	CONNECTOR-VAC HOSE	1		SUPER CUSTOM RD AUTO OP P-DX2400 WAGON RD AUTO	1069		Y	N	47475-F0700
	801	47477-E0900	CLIP-VAC HOSE	1	5	OP DIESEL RD					
	901	47477-E0200	CLIP-CHECK VALVE	1	5	SUPER CUSTOM DX RD OP P-DX W VAN-DX RD MANUAL					
•	1001	08721-11600	CLAMP-HOSE	1	10	OP ALL EXC STD					
	02	08723-11800	CLAMP-HOSE	1	10	OP ALL EXC STD			Y	N	08721-11600
	1101	00314-01210	SCREW-MACHINE P/H #10	1	50	SUPER CUSTOM P-2400					
	1201	00915-11010	WASHER-SPRING #10	1	50	SUPER CUSTOM P-2400					
	1301	00915-41010	WASHER PLAIN #10	1	50	SUPER CUSTOM P-2400					

NOTE:

ILLUSTRATION **198**

© 1972 NISSAN MOTOR CO., LTD.

REVISED: DECEMBER, 1972

PRINTED IN JAPAN

NOTE

Printed in Japan

NISSAN MOTOR CO., LTD.

PUB. No.: C-0020 VOL. 2

ILLUSTRATION No.: 199, 200

A spare ILLUSTRATION No. in the future.

© 1972 NISSAN MOTOR CO., LTD.

Printed in Japan

STEERING

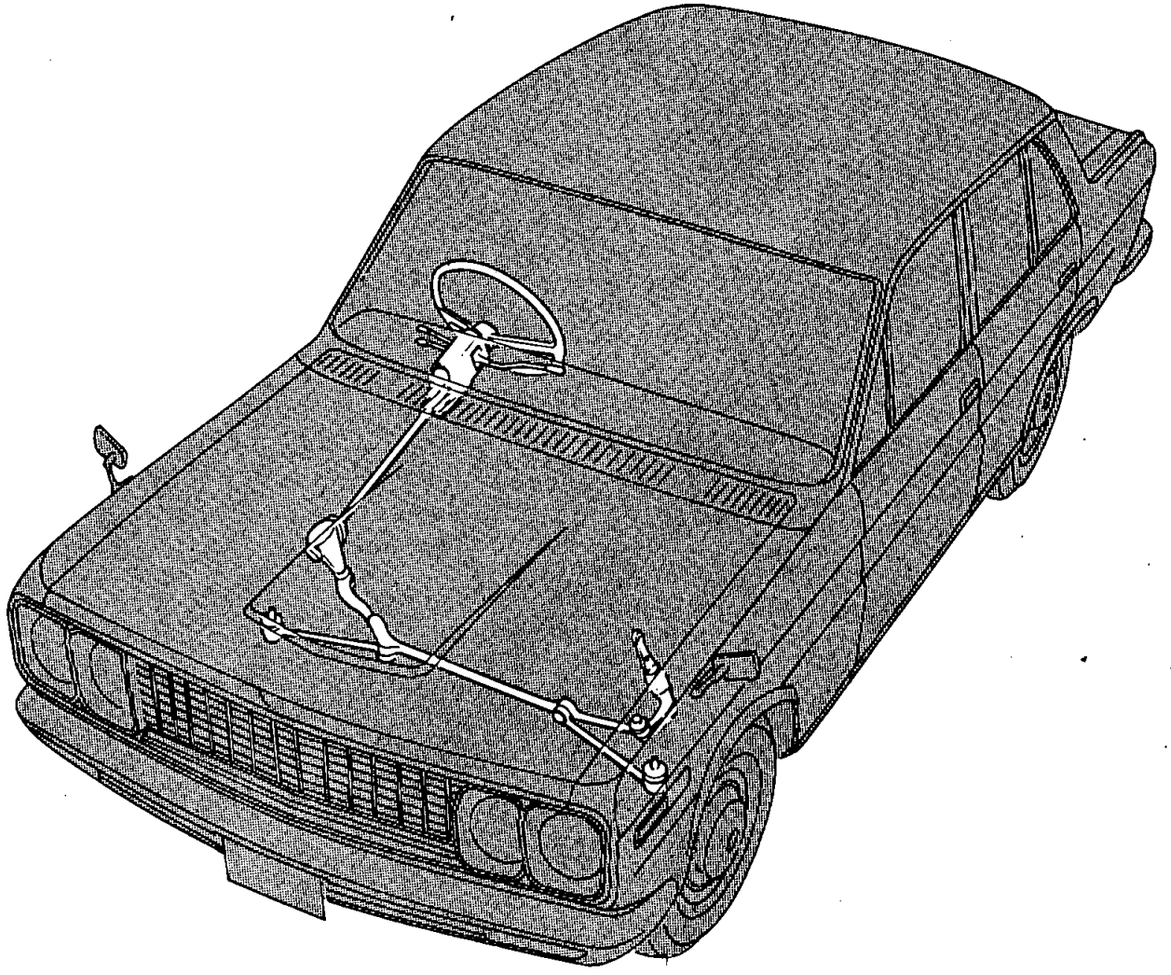

THE BETTER YOUR FACILITIES, THE MORE BUSINESS YOU CAN DO!

Remember, the successful and profitable operation is largely influenced by your facilities – how well they are planned to attract and service your customers.

Let's take a close look at what you need to work with to maintain your present business effciently – and to expend toward the goal you seek.

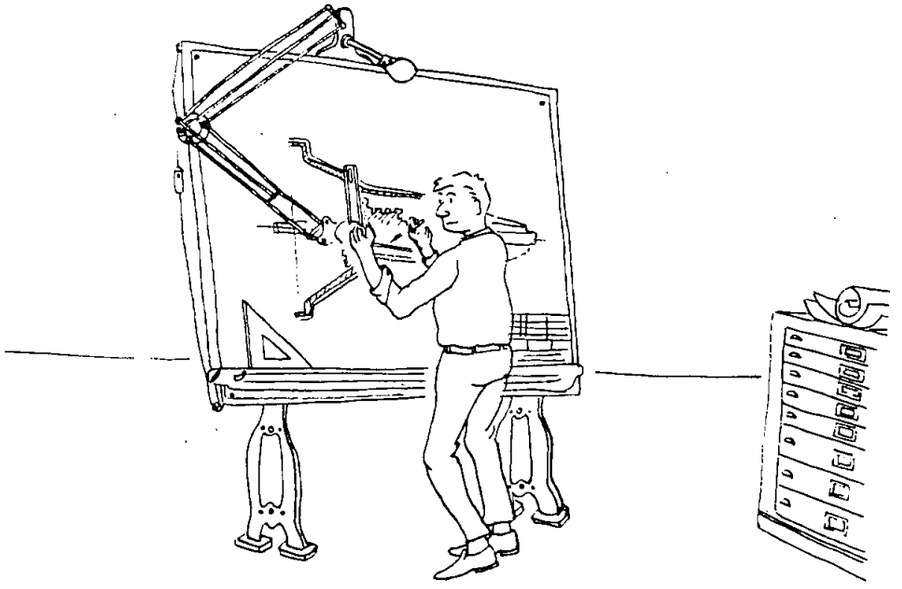

NOTE

Printed in Japan

NISSAN MOTOR CO., LTD.

STEERING GEAR & COLUMN JACKET (R DRIVE)

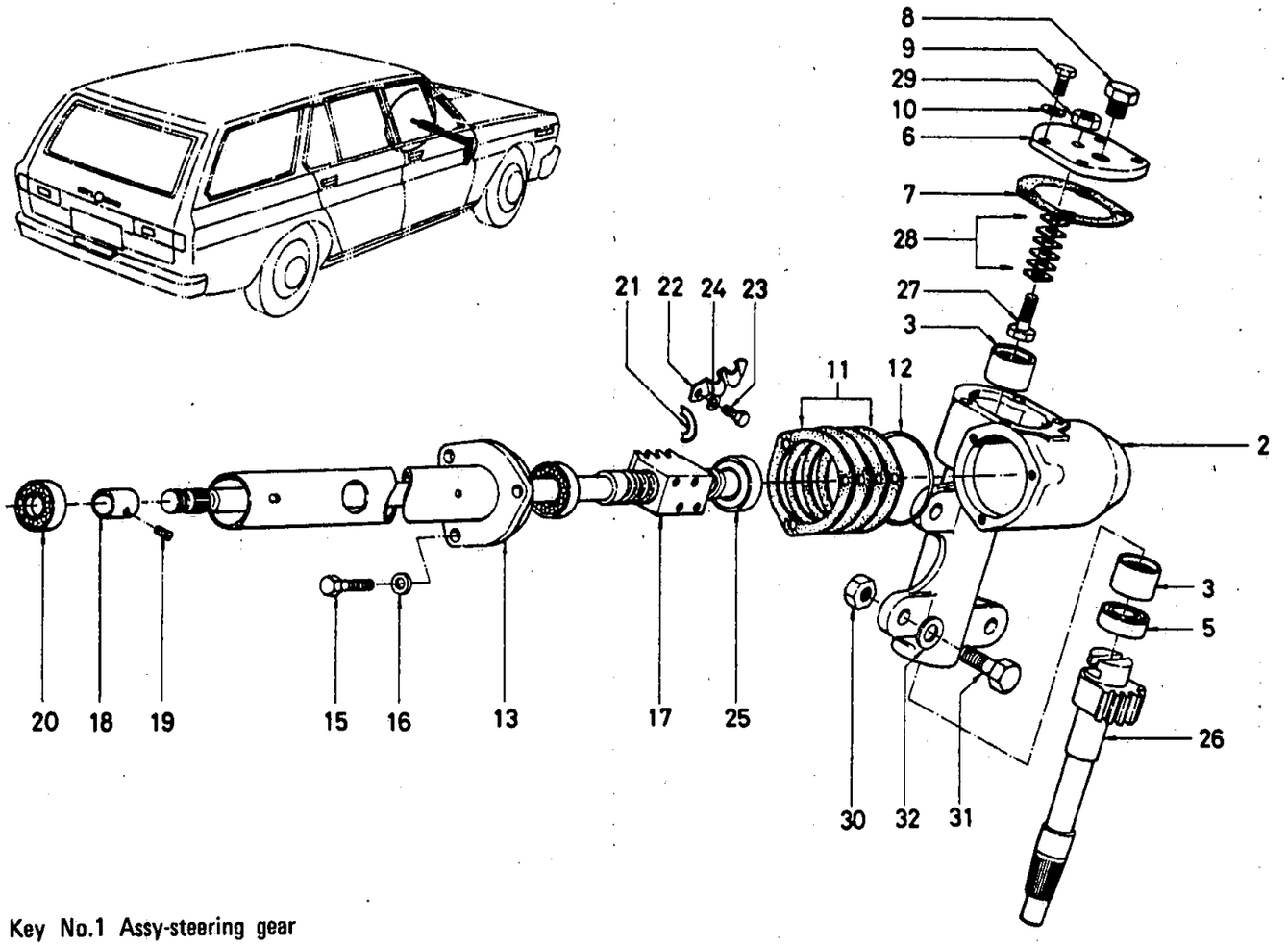

Note; Key No.1 Assy-steering gear
includes Key No.2~13, 15~32

© 1972 NISSAN MOTOR CO., LTD.

REVISED: DECEMBER, 1972

PRINTED IN JAPAN

C

STEERING GEAR & COLUMN JACKET (L DRIVE)

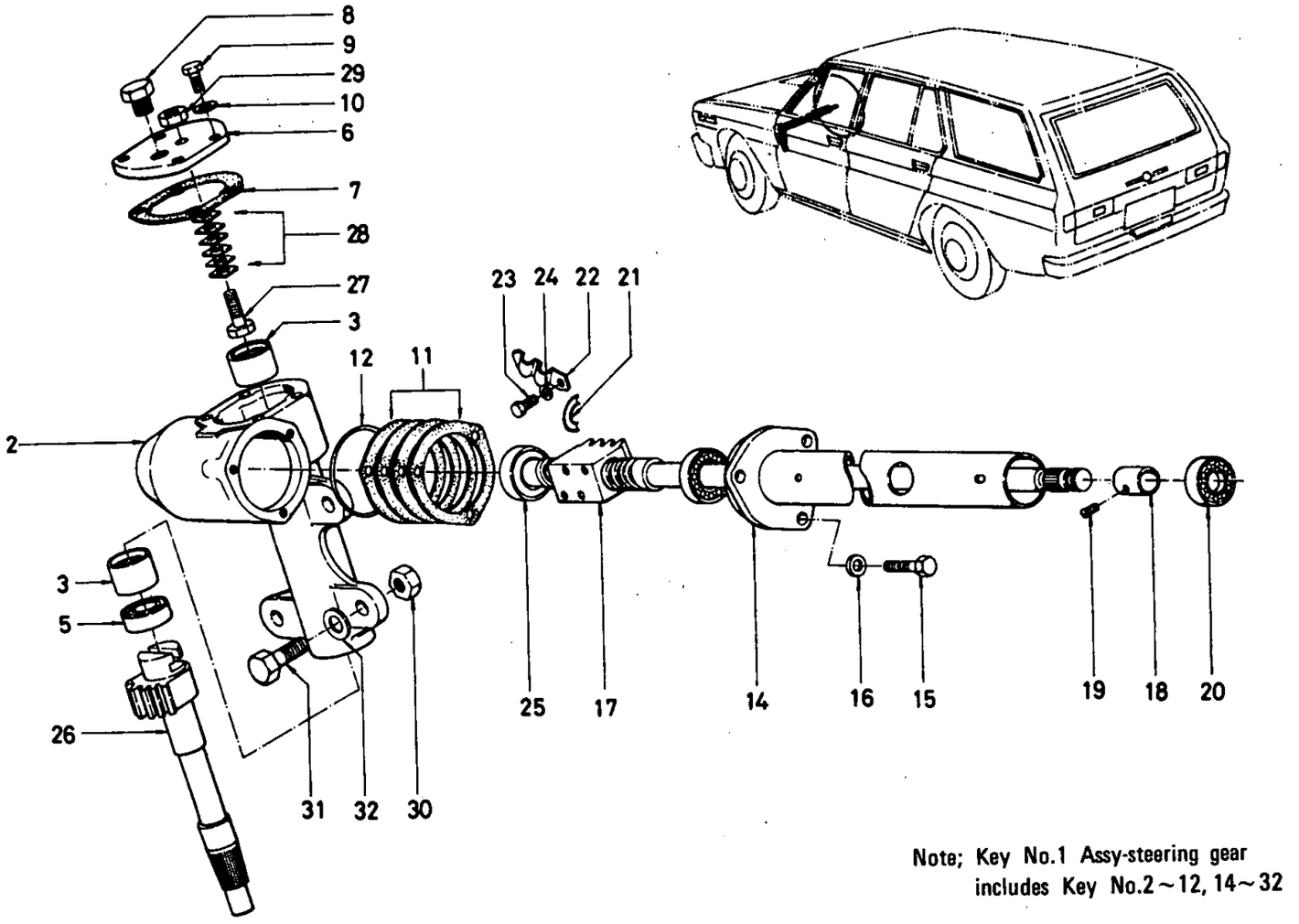

Note; Key No.1 Assy-steering gear includes Key No.2~12, 14~32

© 1972 NISSAN MOTOR CO., LTD.

PRINTED IN JAPAN

STEERING GEAR & COLUMN JACKET

S	KEY NO.	PART NO.	DESCRIPTION	Q'TY	UNIT PKG FOR DIST.	APPLIED MODEL	APPLIED DATE FROM	APPLIED DATE UP TO	ICA N	ICA F	SUPERSEDED
	101	48010-E0250	ASSY-STEERING GEAR	1	1	R DRIVE					
	02	48010-E1255	ASSY-STEERING GEAR	1	1	L DRIVE					
	03	48010-E1750	ASSY-STEERING GEAR USE FOR SOUSE AFRICA	1	1	R DRIVE					
	201	48011-E0100	COMP-HOUSING STEERING GEAR	1	1	R DRIVE					
	02	48011-E1200	COMP-HOUSING STEERING GEAR	1	1	L DRIVE					
	301	48127-71201	COMP-BEARING NEEDLE	2	1	ALL					
•	401	48062-31300	PLUG-DRAIN	1	50	ALL					
	501	48137-36700	SEAL-OIL ROLLER SHAFT	1	10	ALL					
	601	48201-71200	COVER-SECTOR SHAFT	1	1	ALL					
	701	48204-71200	GASKET-SECTOR SHAFT COVER	1	10	ALL					
	801	48064-27160	PLUG-FILLER	1	5	ALL					
•	901	08120-81800	BOLT-HEX FIXING COVER TO HOUSING	4	50	ALL					
	02	08120-81810	BOLT-HEX FIXING COVER TO HOUSING	4	50	ALL	1069		Y	N	08120-81800
	1001	08915-13810	WASHER-LOCK SPRING FIX COVER TO HOUSING	4	50	ALL					
	1101	48029-71200	SHIM-WORM BEARING 0.672T	1	10	ALL					
	02	48030-71200	SHIM-WORM BEARING 0.254T	2	10	ALL					
	03	48031-71200	SHIM-WORM BEARING 0.127T	1	10	ALL					
	04	48032-71200	SHIM-WORM BEARING 0.050T	1	10	ALL					
	1201	48035-71200	RING	1	10	ALL					
	1301	48860-E0200	COMP-COLUMN JACKET	1	1	R DRIVE					
	1401	48860-E1205	COMP-COLUMN JACKET	1	1	L DRIVE					

NOTE:

© 1972 NISSAN MOTOR CO., LTD.

PRINTED IN JAPAN

STEERING GEAR & COLUMN JACKET

S	KEY NO.	PART NO.	DESCRIPTION	Q'TY	UNIT PKG FOR DIST.	APPLIED MODEL	APPLIED DATE FROM	APPLIED DATE UP TO	ICA N	ICA F	SUPERSEDED
	1501	08120-82210	BOLT-HEX FIXING FLANGE TO HOUSING	3	50	ALL					
	1601	08915-13810	WASER-LOCK SPRING FIX FLANGE TO HOUSING	3	50	ALL					
	1701	48150-E0200	ASSY-STEERING COLUMN	1	1	R DRIVE					
	02	48150-E1205	ASSY-STEERING COLUMN	1	1	L DRIVE					
	03	48150-E1700	ASSY-STEERING COLUMN USE FOR SOUSE AFRICA	1	1	R DRIVE					
	1801	48846-E0200	COLLER-STEERING COLUMN	1	5	ALL					
	1901	48848-E0200	SCREW-COLLER STOPPER	1	10	ALL					
	2001	48054-73000	ASSY-COLUMN BEARING	1	1	ALL					
	2101	48111-72000	TUBE-BALL GUIDE	4	5	ALL					
	2201	48141-72000	CLAMP-BALL GUIDE TUBE	1	10	ALL					
	2301	08360-50600	SCREW	2	50	ALL					
	2401	08915-13510	WASHER-LOCK SPRING	2	50	ALL					
	2501	48025-71200	BEARING-STEERING WORM	2	1	ALL					
	2601	48103-E0100	SHAFT-SECTOR STEERING	1	1	ALL					
	2701	48135-32200	SCREW-SECTOR SHAFT ADJUST	1	5	ALL					
	2801	48129-71200	SHIM-SECTOR SHAFT ADJUST	1	10	ALL					
	02	48130-71200	SHIM-SECTOR SHAFT ADJUST	1	10	ALL					
	03	48131-71200	SHIM-SECTOR SHAFT ADJUST	1	10	ALL					
	04	48132-71200	SHIM-SECTOR SHAFT ADJUST	1	10	ALL					
	05	48133-71200	SHIM-SECTOR ADJUST	1	10	ALL					
	2901	00911-24610	NUT	1	50	ALL					

NOTE:

© 1972 NISSAN MOTOR CO., LTD.

PRINTED IN JAPAN

STEERING GEAR & COLUMN JACKET

S	KEY NO.	PART NO.	DESCRIPTION	Q'TY	UNIT PKG FOR DIST.	APPLIED MODEL	APPLIED DATE FROM	APPLIED DATE UP TO	ICA N	ICA F	SUPERSEDED
	3001	00912-64610	NUT-SELF LOCK FIXING HOUSING TO BODY	3	25	ALL					
	3101	48214-73000	BOLT-HEX FIXING HOUSING TO BODY	3	10	ALL					
	3201	00915-51610	WASHER-PLAIN FIXING HOUSING TO BODY	3	50	ALL					

NOTE:

© 1972 NISSAN MOTOR CO., LTD.

REVISED: DECEMBER, 1972

PRINTED IN JAPAN

NOTE

Printed in Japan

NISSAN MOTOR CO., LTD.

STEERING GEAR & COLUMN (COLLAPSIBLE TYPE, R DRIVE)

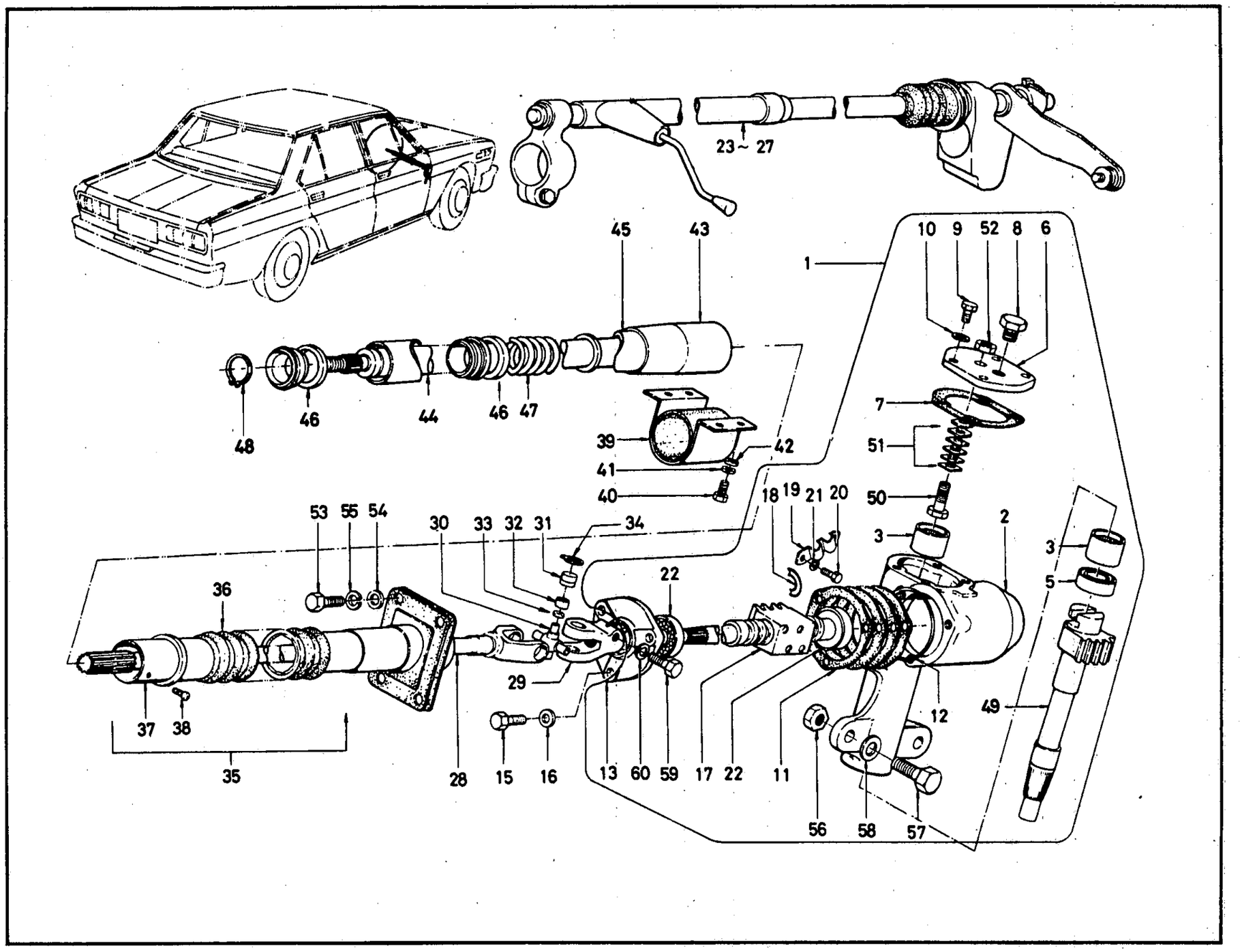

ILLUSTRATION **202-1**

© 1972 NISSAN MOTOR CO., LTD.

REVISED: DECEMBER, 1972

PRINTED IN JAPAN

STEERING GEAR & COLUMN (COLLAPSIBLE TYPE, L DRIVE)

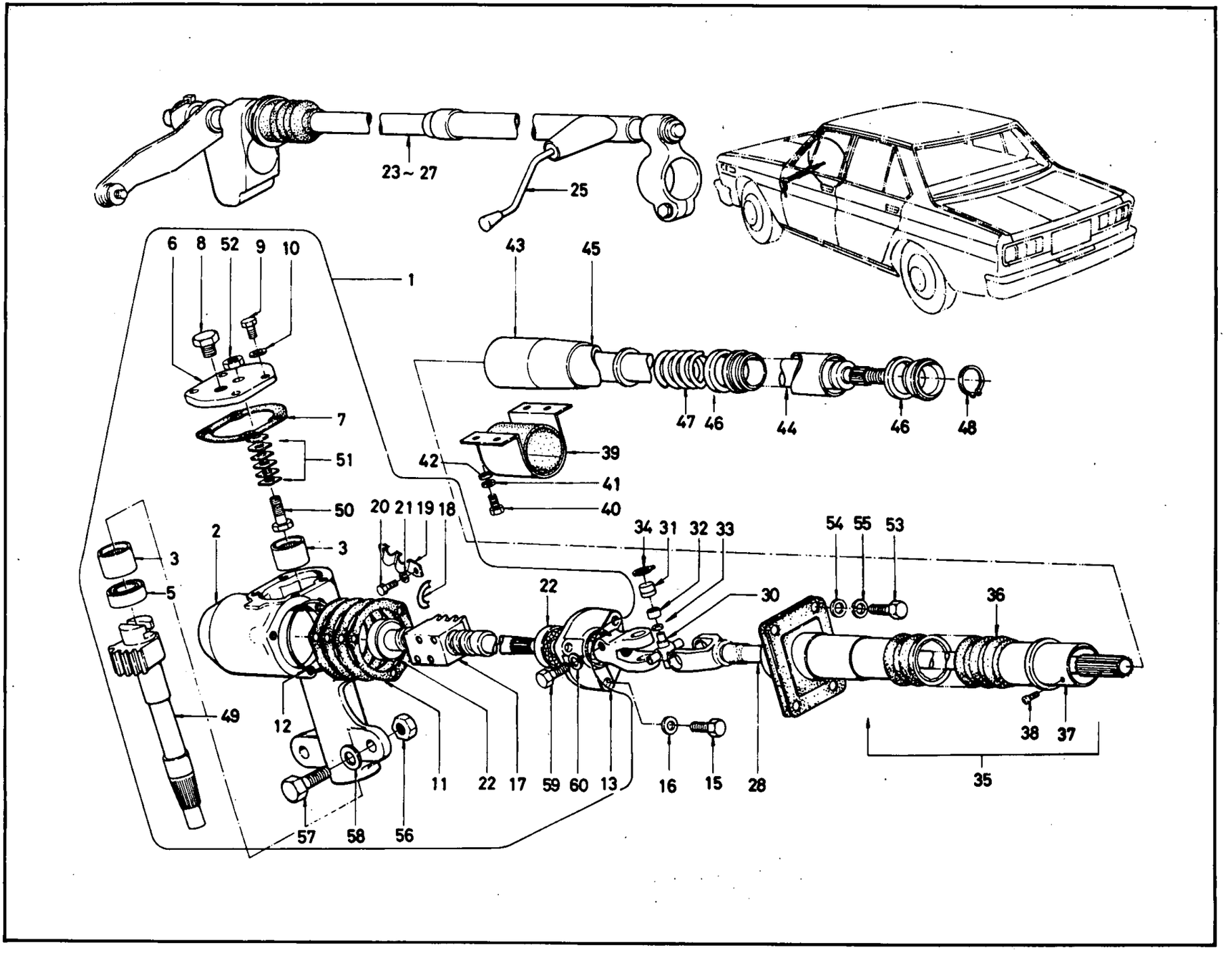

© 1972 NISSAN MOTOR CO., LTD.

PRINTED IN JAPAN

STEERING GEAR & COLUMN (COLLAPSIBLE TYPE)

S	KEY NO.	PART NO.	DESCRIPTION	Q'TY	UNIT PKG FOR DIST.	APPLIED MODEL	APPLIED DATE FROM	APPLIED DATE UP TO	ICA N	ICA F	SUPERSEDED
	101	48010-E0150	ASSY-GEAR STEERING	1	1	OP R DRIVE					
	02	48010-E1250	ASSY-GEAR STEERING	1	1	OP L DRIVE					
	201	48011-E0100	COMP-HOUSING STEERING GEAR	1	1	OP R DRIVE					
	02	48011-E1200	COMP-HOUSING STEERING	1	1	OP L DRIVE					
	301	48127-71201	COMP-BEARING NEEDLE	2	1	OP ALL					
*	401	48062-31300	PLUG-DRAIN	1	50	OP ALL					
	501	48137-36700	SEAL-OIL ROLLER SHAFT	1	10	OP ALL					
	601	48201-71200	COVER-SECTOR SHAFT	1	1	OP ALL					
	701	48204-71200	GASKET-SECTOR SHAFT COVER	1	10	OP ALL					
	801	48064-27160	PLUG-FILLER	1	5	OP ALL					
*	901	08120-81800	BOLT-HEX M8x1.25 FIXING COVER TO HOUSING	4	50	OP ALL					
	02	08120-81810	BOLT-HEX M8x1.25 FIXING COVER TO HOUSING	4	50	OP ALL			Y	N	08120-81800
	1001	08915-13810	WASHER-LOCK SPRING	4	50	OP ALL					
	1101	48029-71200	SHIM-WORM BEARING	1	10	OP ALL					
	02	48030-71200	SHIM-WORM BEARING 0.254T	2	10	OP ALL					
	03	48031-71200	SHIM-WORM BEARING	1	10	OP ALL					
	04	48032-71200	SHIM-WORM BEARING 0.050T	1	10	OP ALL					
	1201	48035-71200	'O'RING-61.8x2	1	10	OP ALL					
*	1301	48250-E0100	COMP-HOUSING REAR COVER	1		OP ALL					
	02	48250-P0100	COMP-HOUSING REAR COVER	1	1	OP ALL			Y	N	48250-E0100
	1401	48029-04100	SEA-OIL WORM	1	5	OP ALL					
	1501	08120-82210	BOLT-HEX M8x1.25	3	50	OP ALL					

NOTE:

ILLUSTRATION **202**

© 1972 NISSAN MOTOR CO., LTD.

REVISED: DECEMBER, 1972

C

PRINTED IN JAPAN

STEERING GEAR & COLUMN (COLLAPSIBLE TYPE)

S	KEY NO.	PART NO.	DESCRIPTION	Q'TY	UNIT PKG FOR DIST.	APPLIED MODEL	APPLIED DATE FROM	APPLIED DATE UP TO	ICA N	ICA F	SUPERSEDED
	1601	08915-13810	WASHER-LOCK SPRING FIXING FLANGE TO HOUSING	3	50	Op ALL					
	1701	48150-E0100	ASSY-WORM STEERING	1	1	Op ALL					
	1801	48111-72000	TUBE-BALL GUIDE	4	5	Op ALL					
	1901	48141-72000	CLAMP-BALL GUIDE TUBE	1	10	Op ALL					
	2001	08360-50600	SCREW M5X0.8	2	50	ALL					
	2101	08915-13510	WASHER-LOCK SPRING	2	50	Op ALL					
	2201	48025-71200	BEARING-STEERING WORM	2	1	Op ALL					
	2301	48801-E0352	ASSY-STEERING COLUMN WITH P/C IMPACT ABSORB	1	1	Op SUPER PERSONAL STD DIESEL R DRIVE		0969			
	02	48801-E1352	ASSY-STEERING COLUMN WITH P/C IMPACT ABSORBING	1		Op SUPER PERSONAL STD DIESEL L DRIV F		0969			
*	03	48801-E0152	ASSY-STEERING COLUMN WITH P/C IMPACT ABSORB	1	1	Op DELUXE WAGON R DRIVE		0969			
	04	48801-E1252	ASSY-STEERING COLUMN WITH P/C IMPACT ABSORBING	1		Op DELUXE WAGON L DRIVE		0969			
	05	48801-E0452	ASSY-STEERING COLUMN WITH P/C IMPACT ABSORBING	1		Op VAN R DRIVE		0969			
*	06	48801-E1452	ASSY-STEERING COLUMN WITH P/C IMPACT ABSORBING	1		Op VAN L DRIVE		0969			
	07	48801-E3355	ASSY-STEERING COLUMN WITH P/C IMPACT ABSORBING	1	1	Op VAN L DRIVE			Y	N	48801-E1452
*	08	48801-E0130	ASSY-STEERING COLUMN WITH P/C IMPACT ABSORBING	1	1	Op AUTO R DRIVE		0969			
	09	48801-E1231	ASSY-STEERING COLUMN WITH P/C IMPACT ABSORBING	1		Op AUTO L DRIVE		0969			
	10	48801-E3250	ASSY-STEERING COLUMN WITH P/C IMPACT ABSORBING	1	1	Op 4SPEED R DRIVE	1069				

NOTE:

© 1972 NISSAN MOTOR CO., LTD.

PRINTED IN JAPAN

STEERING GEAR & COLUMN (COLLAPSIBLE TYPE)

S	KEY NO.	PART NO.	DESCRIPTION	Q'TY	UNIT PKG FOR DIST.	APPLIED MODEL	APPLIED DATE FROM	APPLIED DATE UP TO	ICA N	ICA F	SUPERSEDED
	2311	48801-E3230	ASSY-STEERING COLUMN WITH P/C IMPACT ABSORBING	1	1	OP AUTO R DRIVE	1069				
*	12	48801-E3255	ASSY-STEERING COLUMN WITH P/C IMPACT ABSORBING	1		OP 3SPEED R DRIVE	1069				
	13	48801-E3350	ASSY-STEERING COLUMN WITH P/C IMPACT ABSORBING	1		OP 3SPEED L DRIVE	1069				
	14	48801-E3355	ASSY-STEERING COLUMN WITH P/C IMPACT ABSORBING	1	1	OP 4SPEED L DRIVE	1069				
	15	48801-E3330	ASSY-STEERING COLUMN WITH P/C IMPACT ABSORBING	1		OP AUTO L DRIVE					
	2401	34102-E0300	ASSY-DEVICE CONTROL	1	1	OP SUPER PERSONAL STANDARD DIESEL R DRIVE		0969			
	02	34102-E0300	ASSY-DEVICE CONTROL	1	1	OP SEDAN MANUAL EXC STANDARD R DRIVE	1069				
	03	34102-E1300	ASSY-DEVICE CONTROL	1		OP SUPER PERSONAL STANDARD DIESEL L DRIVE		0969			
	04	34102-E1300	ASSY-DEVICE CONTROL	1		OP SEDAN MANUAL EXC STANDARD L DRIVE	1069				
	05	34102-E0200	ASSY-DEVICE CONTROL	1	1	OP DELUXE W & V R DRIVE		0969			
	06	34102-E0200	ASSY-DEVICE CONTROL	1	1	OP SEDAN MANUAL EXC STANDARD R DRIVE	1069				
*	07	34102-E1200	ASSY-DEVICE CONTROL	1	1	OP DELUXE W & V L DRIVE		0969			
*	08	34102-E1200	ASSY-DEVICE CONTROL	1	1	OP MANUAL L DRIVE	1069				
	09	34102-E0121	ASSY-DEVICE CONTROL	1	1	OP AUTO R DRIVE					

NOTE:

C

PRINTED IN JAPAN

© 1972 NISSAN MOTOR CO., LTD.

REVISED: DECEMBER, 1972

STEERING GEAR & COLUMN (COLLAPSIBLE TYPE)

S	KEY NO.	PART NO.	DESCRIPTION	Q'TY	UNIT PKG FOR DIST.	APPLIED MODEL	APPLIED DATE FROM	APPLIED DATE UP TO	ICA N	ICA F	SUPERSEDED
	2410	34102-E1221	ASSY-DEVICE CONTROL	1		OP AUTO L DRIVE					
	2501	34440-E0400	ASSY-LEVER CHANGE SPEED	1	1	OP R DRIVE EXC DELUXE WAGON		0969			
	02	34440-E1400	ASSY-LEVER CHANGE SPEED	1	1	OP L DRIVE EXC DELUXE WAGON		0969			
	03	34441-E0200	ASSY-LEVER CHANGE SPEED	1	1	OP DELUXE WAGON R DRIVE		0969			
	04	34441-E0200	ASSY-LEVER CHANGE SPEED	1	1	OP MANUAL R DRIVE	1069				
	05	34441-E1200	ASSY-LEVER CHANGE SPEED	1	1	OP DELUXE WAGON L DRIVE		0969			
	06	34441-E1200	ASSY-LEVER CHANGE SPEED	1	1	OP MANUAL L DRIVE	1069				
	2601	34400-E0301	ASSY-BRACKET LOWER SUPPORT	1	1	OP SEDAN MANUAL EXC-STD 3 SPEED R D					
	02	34400-E1301	ASSY-BRACKET LOWER SUPPORT	1	1	OP SEDAN MANUAL EXC-STD-VAN-WA LD			Y	Y	34400-E1300
	03	34400-E0200	ASSY-BRACKET LOWER SUPPORT	1	1	OP MANUAL 4 SPEED R DRIVE					
	04	34400-E1200	ASSY-BRACKET LOWER SUPPORT	1	1	OP MANUAL VAN WAGON SEDAN L DRIVE					
	2701	34431-E0200	ASSY-LEVER SELECT GEAR	1	1	OP MANUAL L DRIVE					
	2801	48830-E1201	ASSY-SHAFT LOWER STEERING COLUMN	1	1	OP ALL					
	2901	48084-23100	YOKE-U JOINT LOWER	1	1	OP ALL					
*	3001	48085-23100	JOURNAL-U JOINT	1	1	OP.ALL					
	02	48085-23125	JOURNAL-U JOINT	1	1	OP ALL		0969	Y	N	48085-23100
*	3101	48086-23100	ASSY-BEARING U JOINT	4	5	OP ALL					

NOTE:

© 1972 NISSAN MOTOR CO., LTD.

PRINTED IN JAPAN

STEERING GEAR & COLUMN (COLLAPSIBLE TYPE)

S	KEY NO.	PART NO.	DESCRIPTION	Q'TY	UNIT PKG FOR DIST.	APPLIED MODEL	APPLIED DATE FROM	APPLIED DATE UP TO	ICA N	ICA F	SUPERSEDED
	3102	48085-23125	ASSY-BEARING U JOINT	4	1	Op ALL		0969	Y	N	48086-23100
*	3201	48095-23100	RETAINER-OIL SEAL	4	10	Op ALL					
	02	48085-23125	RETAINER-OIL SEAL	4	1	Op ALL			Y	N	48095-23100
*	3301	48096-23100	SEAL-OIL	4	10	Op ALL					
	02	48085-23125	SEAL-OIL	4	1	Op ALL		0969	Y	N	48096-23100
*	03	48098-23100	RING-SNAP T=1.05	4	10	Op ALL					
*	04	48099-23100	RING-SNAP T=1.15	4	10	Op ALL					
	05	48085-23125	RING-SNAP T=1.15	4	1	Op ALL	1069		Y	N	48099-23100
*	3401	48097-23100	RING-SNAP T=0.95	4	10	Op ALL					
	02	48085-23125	RING-SNAP T=0.95	4	1	Op ALL	1069		Y	N	48097-23100
	3501	48870-E1201	ASSY-JACKET TUBE LOWER	1		Op L DRIVE		0969			
	02	48870-E3350	ASSY-JACKET TUBE LOWER	1	1	Op L DRIVE	1069		N	N	48870-E1201
	03	48870-E0101	ASSY-JACKET TUBE LOWER	1	1	Op R DRIVE		0969			
	04	48870-E3250	ASSY-JACKET TUBE LOWER	1	1	Op R DRIVE	1069		N	N	48870-E0101
	3601	48954-E1201	SHEET RUBBER	1	5	Op L DRIVE					
	3701	48955-E1201	GROMMET-STEERING COLUMN BRACKET	1	5	Op ALL					
	3801	48891-23100	SCREW FLAT HEAD M4X0.7X12	3	10	Op ALL					
	3901	48960-E0101	ASSY-CLAMP STEERING POST	1	1	Op R DRIVE					
	02	48960-E1201	ASSY-CLAMP STEERING POST	1	1	Op L DRIVE					
	4001	00144-53010	BOLT WITH WASHER LOCK	4	50	Op ALL					
	4101	00915-11510	WASHER-LOCK	4	50	Op ALL					
	4201	00915-41510	WASHER-PLAIN	4	50	Op ALL					

NOTE:

© 1972 NISSAN MOTOR CO., LTD.

REVISED: DECEMBER, 1972
PRINTED IN JAPAN

STEERING GEAR & COLUMN (COLLAPSIBLE TYPE)

S	KEY NO.	PART NO.	DESCRIPTION	Q'TY	UNIT PKG FOR DIST.	APPLIED MODEL	APPLIED DATE FROM	APPLIED DATE UP TO	ICA N	ICA F	SUPERSEDED
	4301	48810-E0102	ASSY-COLUMN UPPER STEERING	1	1	Up R DRIVE					
	02	48810-E1202	ASSY-COLUMN UPPER STEERING	1	1	Up L DRIVE					
	4401	48820-E1202	ASSY-STEERING SHAFT UPPER	1	1	Up ALL					
	4501	48860-E0102	ASSY-JACKET TUBE UPPER	1	1	Up R DRIVE					
	02	48860-E1202	ASSY-JACKET TUBE UPPER	1	1	Up L DRIVE					
	4601	48931-23100	WASHER-PLAIN COLUMN BEARING	2	10	Up ALL					
	4701	48934-23101	SPRING-STEERING COLUMN BEARING	1	10	Up ALL					
	4801	00922-12800	RING-SNAP C TYPE	1	50	Up.ALL					
	4901	48103-E0100	SHAFT-SECTOR STEERING	1	1	Up ALL					
	5001	48135-32200	SCREW-SECTOR SHAFT ADJUSTING	1	5	Up ALL					
	5101	48129-71200	SHIM-SECTOR SHAFT ADJUSTING	1	10	Up ALL					
	02	48130-71200	SHIM-SECTOR SHAFT ADJUSTING	1	10	Up ALL					
	03	48131-71200	SHIM-SECTOR SHAFT ADJUSTING	1	10	ALL					
	04	48132-71200	SHIM-SECTOR SHAFT ADJUSTING	1	10	ALL					
	05	48133-71200	SHIM-SECTOR SHAFT ADJUSTING	1	10	ALL					
	06	48134-71200	SHIM-SECTOR SHAFT	1	10	ALL					
	5201	00911-24610	NUT-LOCK 3/8	1	50	ALL					
	5301	00314-41814	SCREW-MACHINE 1/4-28 FIXING COLUMN TO DASH	6	50	Up ALL					
	5401	00915-41410	WASHER-PLAIN FIXING COLUMN TO DASH	6	50	Up ALL					
	5501	00915-11410	WASHER-LOCK SPRING FIXING COLUMN TO DASH	6	50	Up ALL					
	5601	00912-64610	NUT-LOCK 318 FIXING HOUSING TO BODY	3	25	Up ALL					

NOTE:

© 1972 NISSAN MOTOR CO., LTD.

PRINTED IN JAPAN

STEERING GEAR & COLUMN (COLLAPSIBLE TYPE)

S	KEY NO.	PART NO.	DESCRIPTION	Q'TY	UNIT PKG FOR DIST.	APPLIED MODEL	APPLIED DATE FROM	APPLIED DATE UP TO	ICA N	ICA F	SUPERSEDED
	5701	48214-73000	BOLT-HEX 318 24UNFX85 FIXING HOUSING TO BODY	3	10	OP ALL					
	5801	00915-51610	WASHER-PLAIN FIXING HOUSING TO BODY	3	50	OP ALL					
	5901	08130-82210	BOLT-HEX M8X1.25X22 FIXING JOINT TO WORM	1	50	OP ALL					
	6001	08915-13810	WASHER-LOCK SPRING FIXING JOINT TO WORM	1	50	OP ALL					

NOTE:

© 1972 NISSAN MOTOR CO., LTD.

REVISED: DECEMBER, 1972
PRINTED IN JAPAN
C

NOTE

Printed in Japan

NISSAN MOTOR CO., LTD.

STEERING LINKAGE (R DRIVE)

Note; Key No.8 Assy-cross rod
includes Key No.10～18

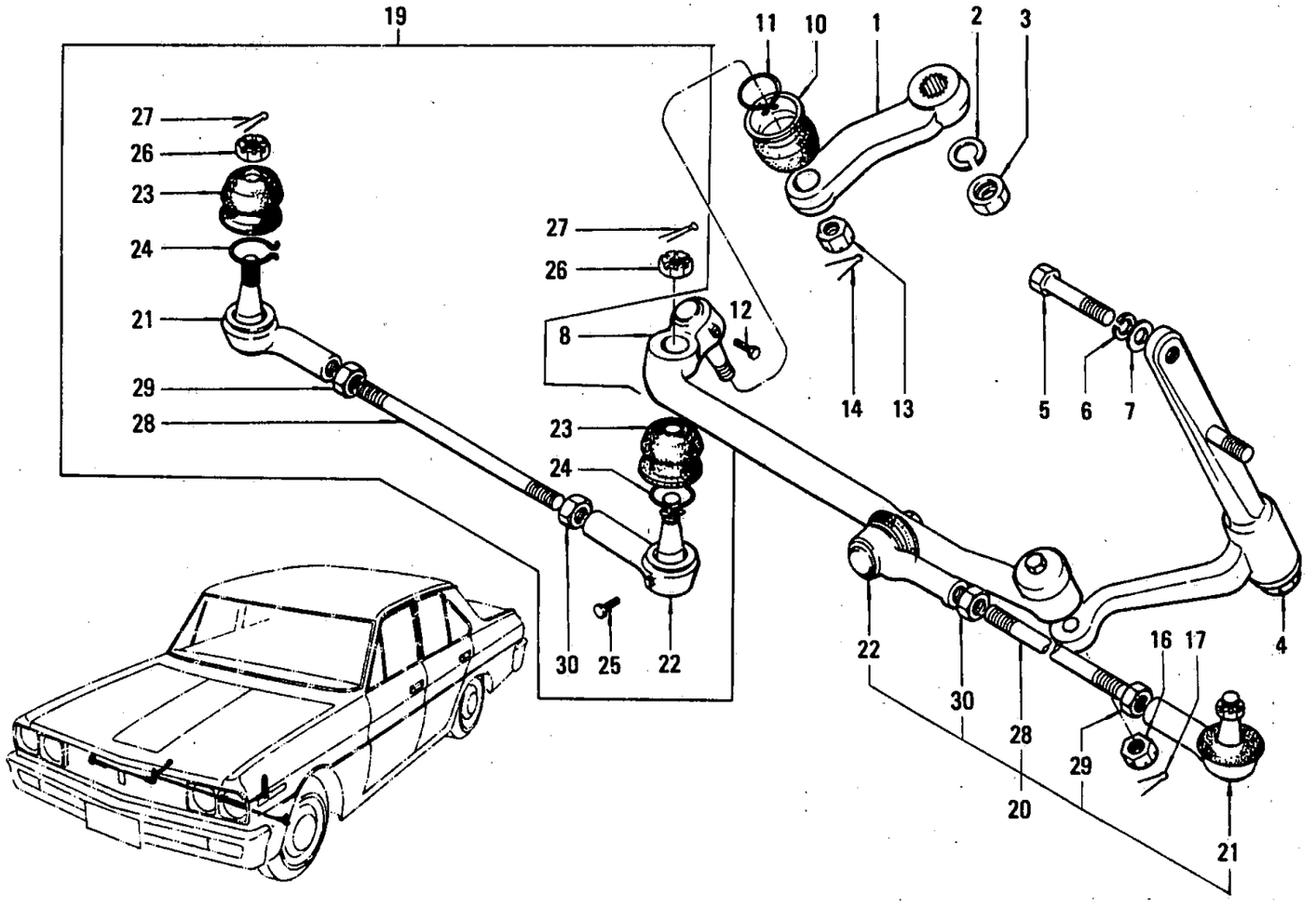

© 1972 NISSAN MOTOR CO., LTD.

REVISED: DECEMBER, 1972

PRINTED IN JAPAN

STEERING LINKAGE (L DRIVE)

Note; Key No.9 Assy-cross rod
includes Key No.10 ~ 18

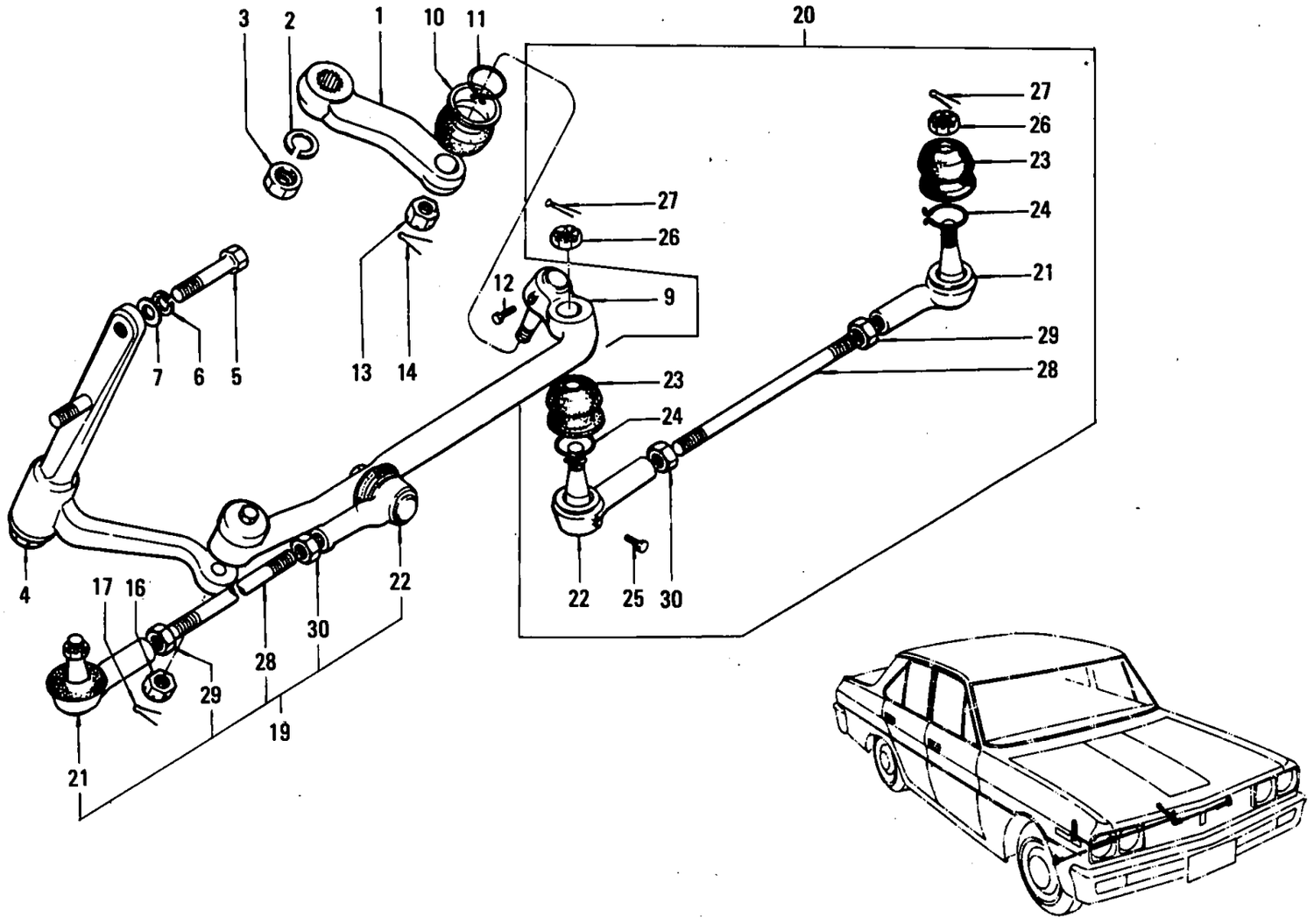

© 1972 NISSAN MOTOR CO., LTD.

PRINTED IN JAPAN

STEERING LINKAGE

S	KEY NO.	PART NO.	DESCRIPTION	Q'TY	UNIT PKG FOR DIST.	APPLIED MODEL	APPLIED DATE FROM	APPLIED DATE UP TO	ICA N	ICA F	SUPERSEDED
	101	48502-73001	ARM-STERING GEAR	1	1	R DRIVE					
	02	48502-75001	ARM-STERING GEAR	1	1	L DRIVE					
	201	08915-15010	WASHER-SPRING FIX GEAR ARM	1	10	ALL					
	301	08911-25000	NUT-FIX GEAR ARM	1	10	ALL					
•	401	48530-E0101	ASSY-IDLER	1	1	ALL					
	02	48530-P0300	ASSY-IDLER	1	1	ALL					
	03	48530-E0100	ASSY-IDLER ('72YEAR MODEL)	1	1	OP SUPER RD					
	501	48214-10600	BOLT STRG GEAR HOUSING	2	10	ALL					
	601	00915-21610	WASHER-SPRING	2	50	ALL					
	701	00915-41610	WASHER-PLAIN	2	50	ALL					
	801	48560-E0101	ASSY-CROSS ROD	1	1	R DRIVE					
	901	48560-E1200	ASSY-CROSS ROD	1	1	L DRIVE					
	1001	48522-21000	COVER-DUST SIDE ROD SOCKET	1	10	ALL					
	02	48524-21000	COVER-DUST SIDE ROD	1	5	ALL					
	1101	48548-18000	CLAMP-DUST COVER SIDE ROD	1	10	ALL					
	1201	40189-73000	PLUG-FILLER	1	10	ALL					
	1301	08911-04210	NUT-SLOTTED	1	50	ALL					
	1401	08921-32510	PIN-COTTER	1	50	ALL					
	1501	40189-73000	PLUG-FILLER	1	10	ALL					
	1601	08911-04210	NUT-SLOTTED	1	50	ALL					
	1701	08921-32910	PIN-COTTER	1	50	ALL					
	1801	48587-21001	COVER-DUST IDLER ARM	1	10	ALL					
	1901	48510-E0100	ASSY-SIDE ROD RH	1	1	ALL					

NOTE:

© 1972 NISSAN MOTOR CO., LTD.

PRINTED IN JAPAN

S	KEY NO.	PART NO.	DESCRIPTION	Q'TY	UNIT PKG FOR DIST.	APPLIED MODEL	APPLIED DATE FROM	APPLIED DATE UP TO	ICA N	ICA F	SUPERSEDED
	2001	48630-E0100	ASSY-SIDE ROD LH	1	1	ALL					
	2101	48520-E0100	ASSY-SOCKET SIDE ROD RH OUTER	2	2	ALL					
	2201	48521-E0100	ASSY-SOCKET SIDE ROD LH INNER	2	2	ALL					
	2301	48522-21000	COVER-DUST SIDE ROD SOCKET	4	10	ALL					
	2401	48548-18000	CLAMP-DUST COVER SIDE ROD	4	10	ALL					
	2501	40189-73000	PLUG-FILLER	4	10	ALL					
	2601	08911-04210	NUT-SLOTTED	4	50	ALL					
	2701	08921-32510	PIN-COTTER	4	50	ALL					
	2801	48512-E0100	BAR-SIDE ROD	2	5	ALL					
◀	2901	08911-34410	NUT-LOCK	2	50	ALL					
	02	01211-00011	NUT-LOCK	2	5	ALL			Y	N	08911-34410
◀	3001	48514-78500	NUT-SIDE ROD LOCK	2	10	ALL					
	02	01211-00021	NUT-SIDE ROD LOCK	2	50	ALL			Y	N	48514-78500

NOTE:

© 1972 NISSAN MOTOR CO., LTD.

PRINTED IN JAPAN

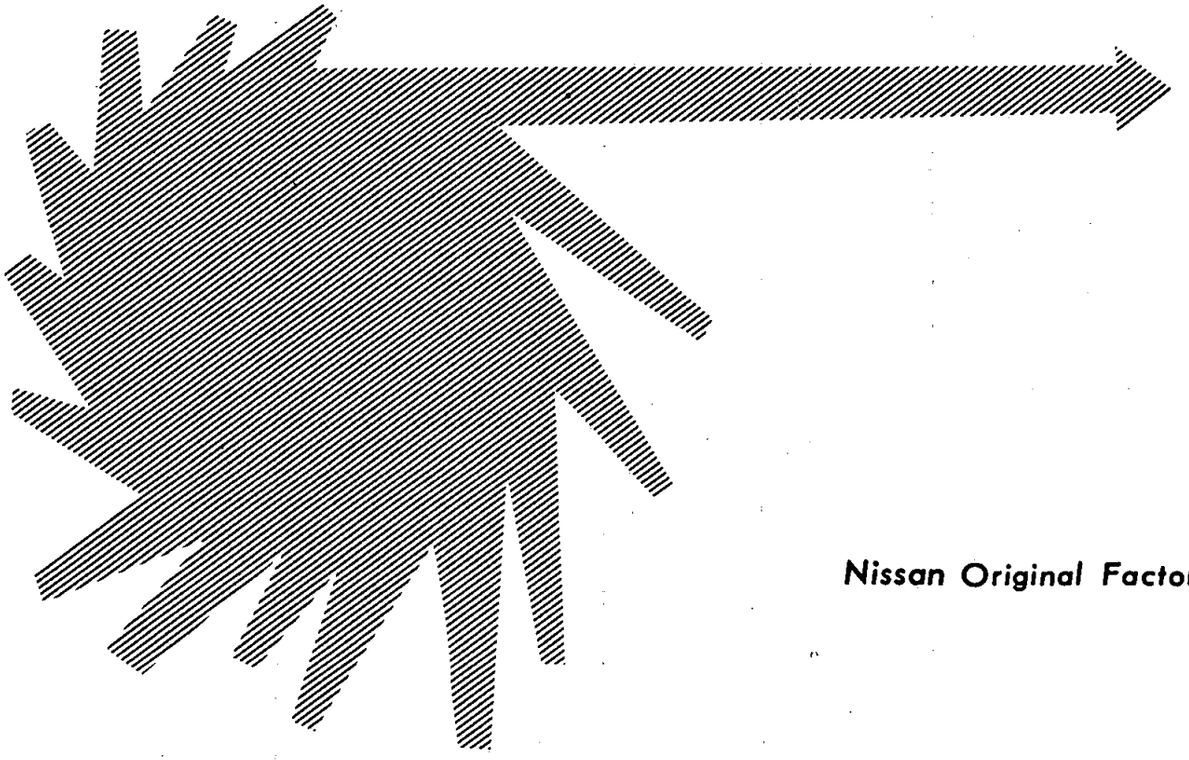

Nissan Original Factory Parts Perform Better.

NISSAN

NOTE

Printed in Japan

NISSAN MOTOR CO., LTD.

STEERING WHEEL & STEERING LOCK (R DRIVE)

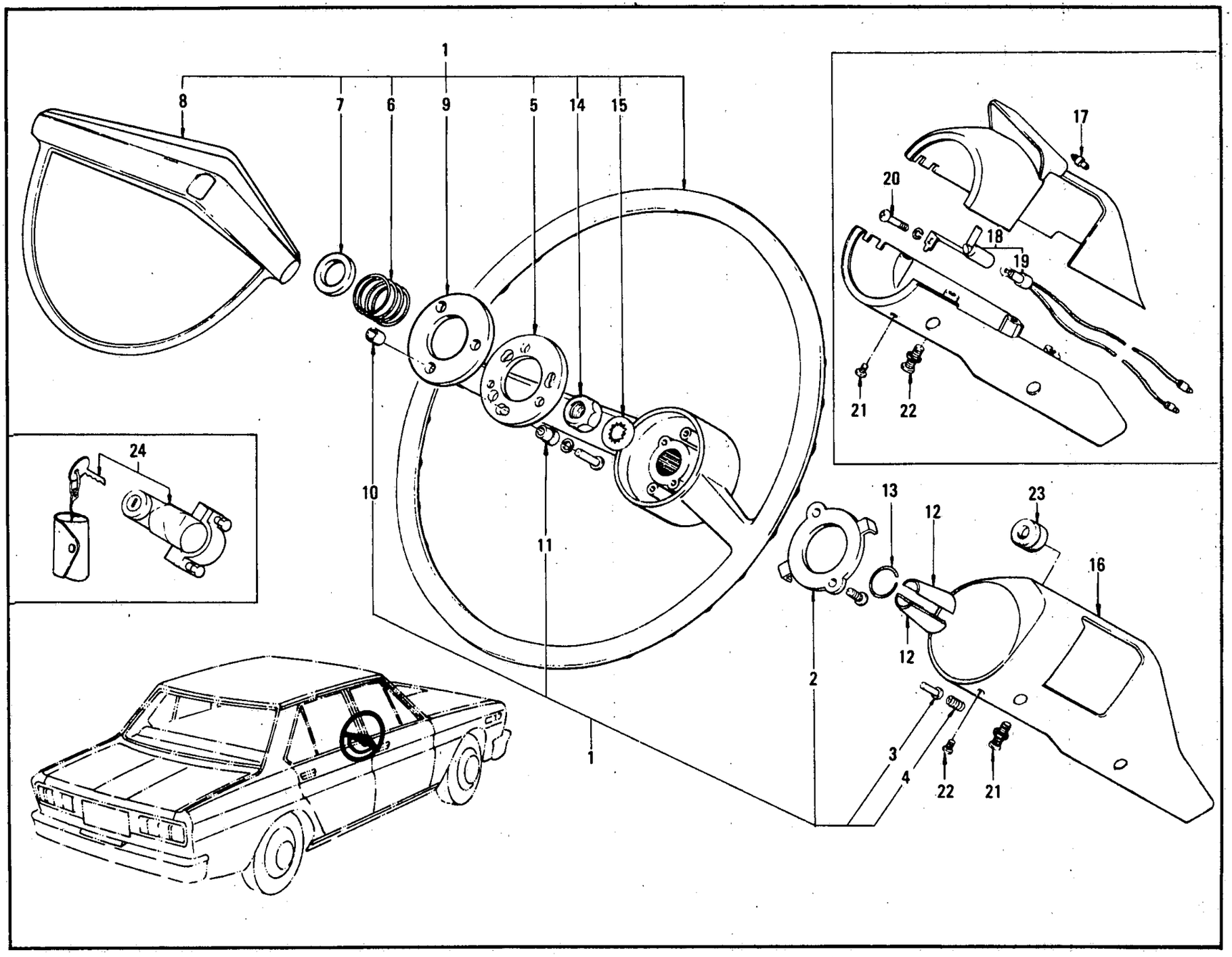

ILLUSTRATION **204-1**

© 1972 NISSAN MOTOR CO., LTD.

REVISED: DECEMBER, 1972

PRINTED IN JAPAN

STEERING WHEEL & STEERING LOCK (L DRIVE)

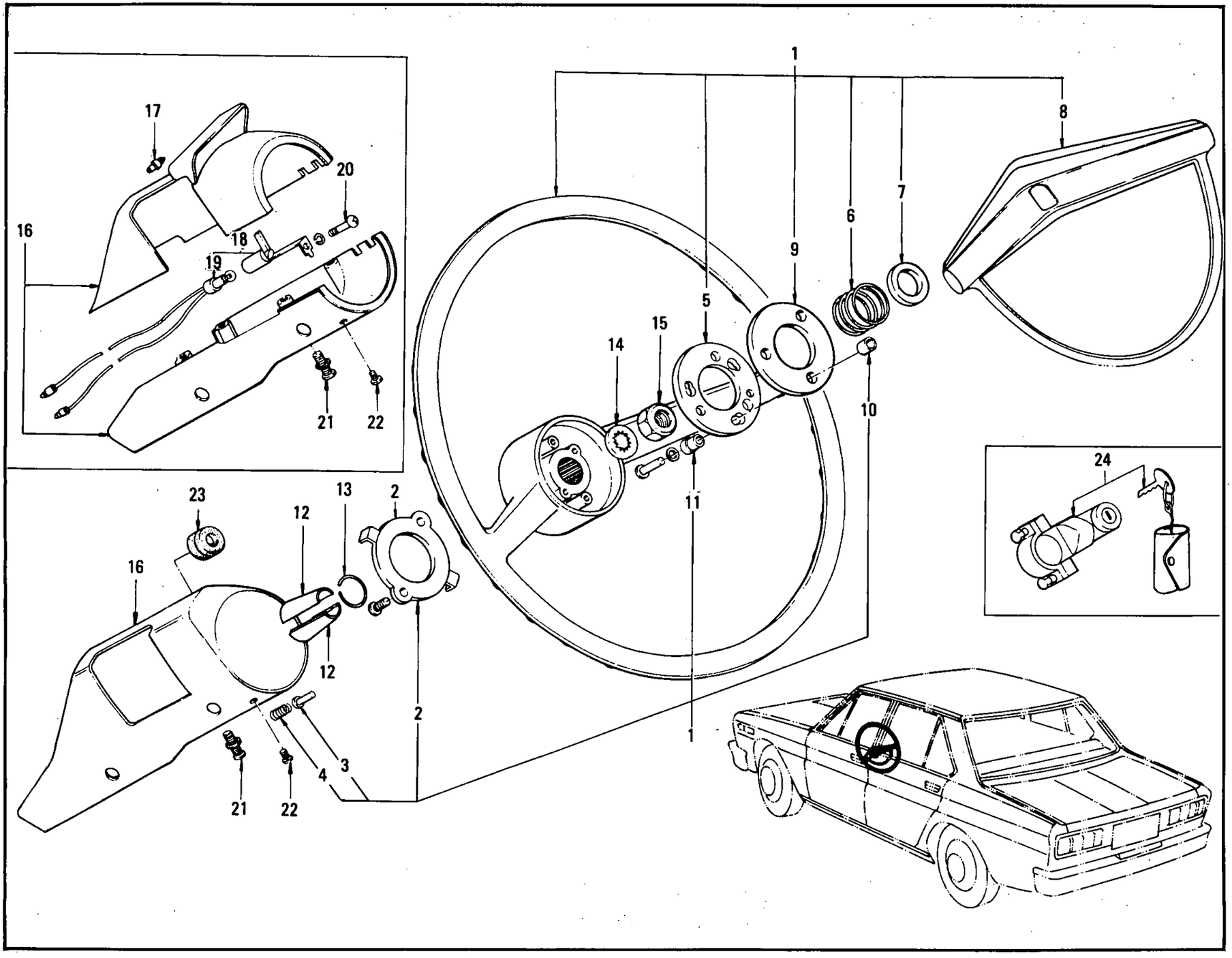

© 1972 NISSAN MOTOR CO., LTD.

PRINTED IN JAPAN

STEERING WHEEL & STEERING LOCK

S	KEY NO.	PART NO.	DESCRIPTION	Q'TY	UNIT PKG FOR DIST.	APPLIED MODEL	APPLIED DATE FROM	APPLIED DATE UP TO	ICA N	ICA F	SUPERSEDED
	101	48400-E0200	ASSY-STEERING WHEEL	1	1	ALL					
	201	48429-73000	RING-SLIP	1	5	ALL					
	301	48435-73000	PIECE-CONTACT	1	10	ALL					
	401	48426-73000	SPRING-CONTACT	1	10	ALL					
	501	48427-73000	SEAT-CONTACT	1	5	ALL					
	601	48441-73000	SPRING-HORN	1	5	ALL					
	701	48440-73000	RETAINER-HORN SPRING	1	5	ALL					
	801	48420-E0200	ASSY-RING HORN	1	1	ALL					
	02	48420-E0205	ASSY-RING HORN	1	1	ALL					
	901	48451-73000	PLATE-CONTACT	1	5	ALL					
	1001	48452-73000	BUSH-CUSHION	3	5	ALL					
	1101	48496-73000	PIECE-CLAMP	3	5	ALL					
	1201	48418-30800	COLLAR-STEERING WHEEL FIX	2	50	ALL					
	1301	48419-30800	WIRE-COLLAR FIX	1	50	ALL					
	1401	08916-14610	WASHER-LOCK	1	50	ALL					
	1501	08911-34610	NUT M6X1.5	1	50	ALL					
	1601	48470-E0100	SET-SHELL STEERING COLUMN	1	1	R DRIVE MANUAL		0969			
	02	48470-E3200	SET-SHELL STEERING COLUMN	1	1	R DRIVE MANUAL	1069				
	03	48470-E0200	SET-SHELL STEERING COLUMN	1	1	R DRIVE AUTO					
	04	48470-E3201	SET-SHELL STEERING COLUMN	1	1	R DRIVE AUTO	1069				
	05	48470-E1200	SET-SHELL STEERING COLUMN	1	1	L DRIVE MANUAL					
	06	48470-E1300	SET-SHELL STEERING COLUMN	1	1	L DRIVE					
	1701	48474-21200	ASSY-BULB INDICATOR	1	10	AUTOMATIC					

NOTE:

© 1972 NISSAN MOTOR CO., LTD.

REVISED: DECEMBER, 1972
PRINTED IN JAPAN

STEERING WHEEL & STEERING LOCK

S	KEY NO.	PART NO.	DESCRIPTION	Q'TY	UNIT PKG FOR DIST.	APPLIED MODEL	APPLIED DATE FROM	APPLIED DATE UP TO	ICA N	ICA F	SUPERSEDED
	1801	34142-21200	ASSY-INDICATOR HAND	1	1	AUTOMATIC					
◆	1901	48474-21201	ASSY-BULB INDICATOR	1	10	AUTOMATIC					
◆	2001	00310-60814	SCREW FIXING HAND INDICATOR	1	50	AUTOMATIC					
	2101	00310-61814	SCREW-MACHINE WITH WASHER	4	50	ALL			Y	N	00310-60814
◆	2201	00330-61410	SCREW-MACHINE	1	50	ALL					
	02	00330-61412	SCREW-MACHINE	1	50	ALL			Y	N	00330-61410
	2301	48479-E0100	PLUG-SHELL COVER '69YEAR MODEL	5	5	ALL RD		0969			
	02	48479-E0100	PLUG-SHELL COVER '70YEAR MODEL	1	5	VAN-DX STD DIESEL RD	1069				
	03	48479-E1200	PLUG-SHELL COVER '69YEAR MODEL	1	5	ALL LD		0969			
	04	48479-E1200	PLUG-SHELL COVER '70YEAR MODEL	1	5	ALL EXC SUPER CUSTOM WAGON LD	1069				
◆	2401	48700-A1100	ASSY-LOCK STEERING '69YEAR MODEL	1	1	OP.ALL EXC DIESEL RD		0969			
	02	48700-E4400	ASSY-LOCK STEERING '69 YEAR MODEL	1	1	OP ALL EXC DIESEL RD			Y	N	48700-A1100
◆	03	48700-A1100	ASSY-LOCK STEERING '70YEAR MODEL	1	1	ALL EXC VAN-DX STD DIESEL RD	1069				
	04	48700-E4400	ASSY-LOCK STEERING '70YEAR MODEL	1	1	ALL EXC VAN-DX STD DIESEL RD		0969	Y	N	48700-A1100
◆	05	48700-A1100	ASSY-LOCK STEERING '70YEAR MODEL	1	1	VAN-DX STD RD	1069				
	06	48700-E4400	ASSY-LOCK STEERING '70YEAR MODEL	1	1	VAN-DX STD RD			Y	N	48700-A1100
◆	07	48700-A2300	ASSY-LOCK STEERING '69YEAR MODEL	1	1	OP ALL LD		0969			

NOTE:

© 1972 NISSAN MOTOR CO., LTD.

PRINTED IN JAPAN

STEERING WHEEL & STEERING LOCK

S	KEY NO.	PART NO.	DESCRIPTION	Q'TY	UNIT PKG FOR DIST.	APPLIED MODEL	APPLIED DATE FROM	APPLIED DATE UP TO	ICA N	ICA F	SUPERSEDED
	2408	48700-29029	ASSY-LOCK STEERING '69 YEAR MODEL	1	10	OP ALL LD			Y	N	48700-A2300
◆	09	48700-A2300	ASSY-LOCK STEERING '70YEAR MODEL	1	1	ALL EXC VAN-DX STD DIESEL LD	1069				
	10	48700-29029	ASSY-LOCK STEERING '70 YEAR MODEL	1	10	ALL EXC VAN-DX STD DIESEL LD			Y	N	48700-A2300
◆	11	48700-A2300	ASSY-LOCK STEERING '70YEAR MODEL	1	1	VAN-DX STD DIESEL LD	1069				
	12	48700-29029	ASSY-LOCK STEERING '70 YEAR MODEL	1	10	VAN-DX STD DIESEL LD			Y	N	48700-A2300
	2501	68490-E0100	MASK-SWITCH HOLE '69YEAR MODEL	1	2	OP ALL EXC DIESEL		0969			
	02	68490-E0100	MASK-SWITCH HOLE '70YEAR MODEL	1	2	ALL EXC VAN-DX STD DIESEL RD	1069				
	03	68490-E0100	MASK-SWITCH HOLE '70YEAR MODEL	1	2	OP VAN-DX STD RD					
	2601	48460-E0100	ASSY-COVER STEERING LOCK '69YEAR MODEL	1	1	OP ALL EXC DIESEL					
	02	48460-E0100	ASSY-COVER STEERING LOCK '70YEAR MODEL	1	1	ALL EXC VAN VAN-DX STD DIESEL RD					
	03	48460-E0100	ASSY-COVER STEERING LOCK '70YEAR MODEL	1	1	OP VAN-DX STD RD					
	04	48460-E1200	ASSY-COVER STEERING LOCK '69YEAR MODEL	1	1	OP ALL LD					
	05	48460-E1200	ASSY-COVER STEERING LOCK '70YEAR MODEL	1	1	ALL EXC VAN-DX STD DIESEL LD					
	06	48460-E1200	ASSY-COVER STEERING LOCK '70YEAR MODEL	1	1	OP VAN-DX STD DIESEL					
◆	2701	08310-40810	SCREW	1	50	OP ALL					

NOTE:

© 1972 NISSAN MOTOR CO., LTD.

REVISED: DECEMBER, 1972
PRINTED IN JAPAN

S	KEY NO.	PART NO.	DESCRIPTION	Q'TY	UNIT PKG. FOR DIST.	APPLIED MODEL	APPLIED DATE FROM	APPLIED DATE UP TO	ICA N	ICA F	SUPERSEDED
	2702	08310-40812	SCREW	1	50	OP ALL		0969			
	2801	08915-13410	WASHER-LOCK	1	50	OP ALL					
	2901	08915-43410	WASHER-PLAIN	1	50	OP ALL					

NOTE:

© 1972 NISSAN MOTOR CO., LTD.

PRINTED IN JAPAN

NOTE

NISSAN MOTOR CO., LTD.

Printed in Japan

NOTE

Printed in Japan

NISSAN MOTOR CO., LTD.

PUB. No.: C-0020 VOL. 2

ILLUSTRATION No.: 205 through 211

A spare ILLUSTRATION No. in the future.

© 1972 NISSAN MOTOR CO., LTD.

Printed in Japan

BODY (SEDAN)

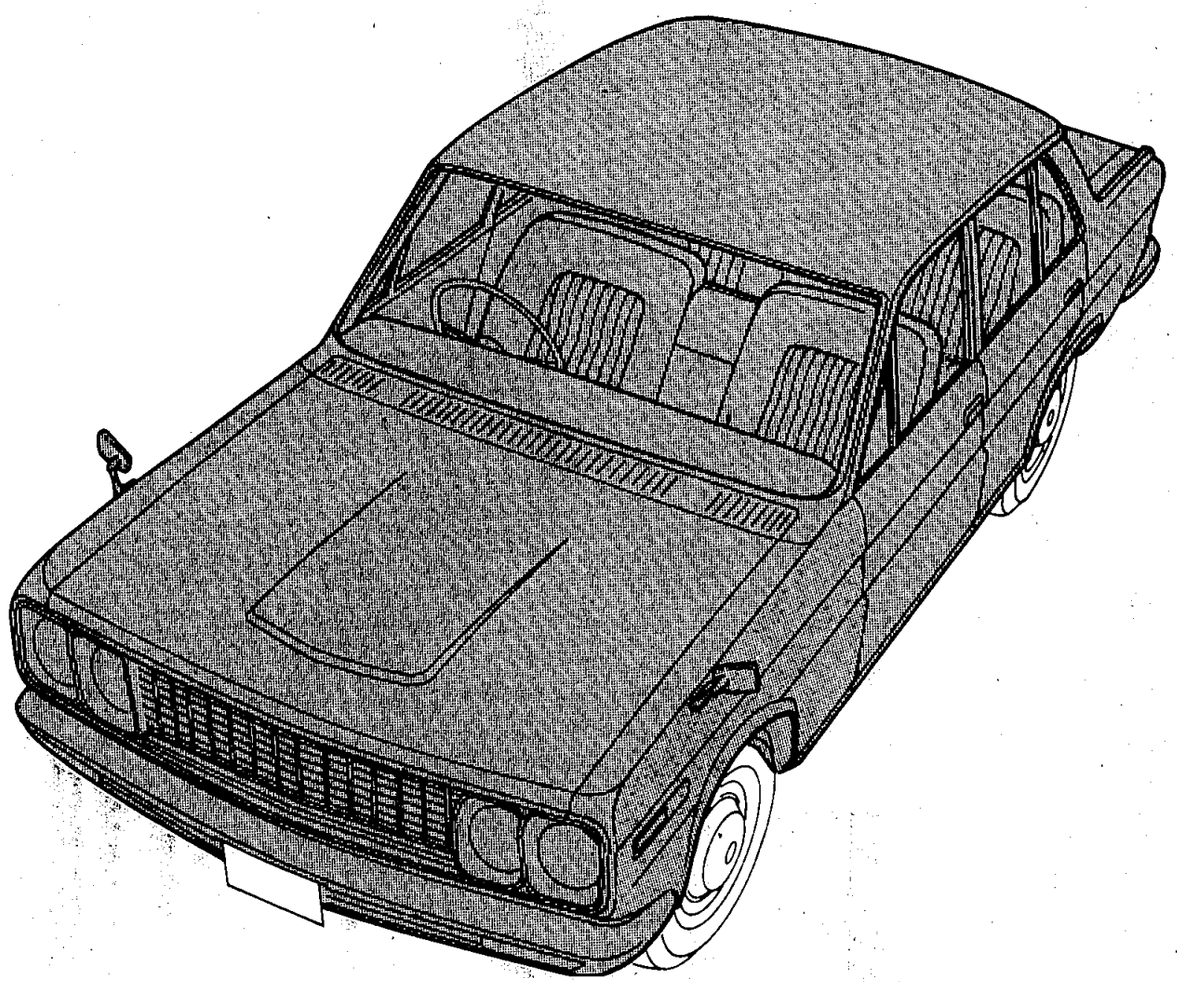

SO YOU CAN TELL ALL YOUR CUSTOMERS

that all NISSAN DATSUN genuine parts are factory designed or approved, and rigidly inspected with thousands of engineers, chemists, physists and inspectors. It makes no difference whether the part is for a new car or for parts service, nor whether we manufacture it or get it from a subcontractor.

NOTE

Printed in Japan

NISSAN MOTOR CO., LTD.

RADIATOR GRILLE & FRONT BUMPER (SEDAN)

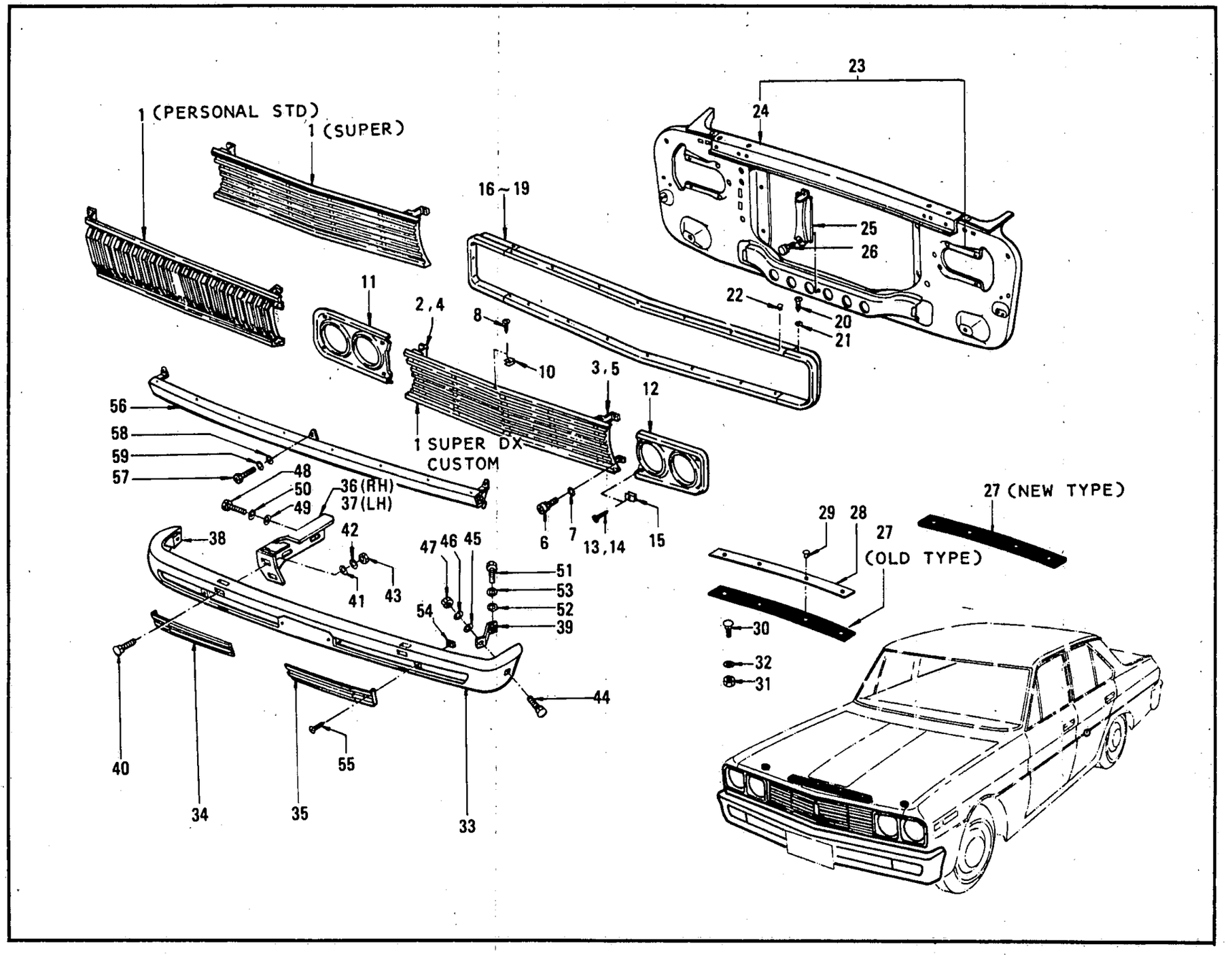

© 1972 NISSAN MOTOR CO., LTD.

REVISED: DECEMBER, 1972

PRINTED IN JAPAN

RADIATOR GRILLE & FRONT BUMPER (SEDAN)

S	KEY NO.	PART NO.	DESCRIPTION	QTY	UNIT PKG FOR DIST.	APPLIED MODEL	APPLIED DATE FROM	APPLIED DATE UP TO	ICA N	ICA F	SUPERSEDED
	101	62301-E0201	GRILLE-RADIATOR	1	1	SUPER DX		0969			
	02	62301-E0201	GRILLE-RADIATOR	1	1	CUSTOM	1069				
	03	62301-E0300	GRILLE-RADIATOR	1	1	PERSONAL STD	1069				
	04	62301-E3200	GRILLE-RADIATOR	1	1	SUPER	1069				
	201	62392-E0100	BRACKET-RADIATOR GRILLE SIDE RH	1	1	SUPER					
	02	62392-E0200	BRACKET-RADIATOR GRILLE SIDE RH	1	1	SUPER DX CUSTOM		0969			
	03	62392-E0200	BRACKET-RADIATOR GRILLE SIDE RH	1	1	CUSTUM	1069				
	301	62393-E0100	BRACKET-RADIATOR GRILLE SIDE LH	1	1	SUPER	1069				
	02	62393-E0200	BRACKET-RADIATOR GRILLE SIDE LH	1	1	SUPER DX		0969			
	03	62393-E0200	BRACKET-RADIATOR GRILLE SIDE LH	1	1	CUSTOM	1069				
	401	62392-E0300	BRACKET-RADIATOR GRILLE RH	1	1	SEDAN EXC SUPER DX CUSTOM					
	501	62393-E0300	BRACKET-RADIATOR GRILLE LH	1	1	SEDAN EXC SUPER DX CUSTOM					
	601	00314-41614	SCREW-MACHINE SIDE LOW FIX	2	50	SEDAN					
	701	00919-41410	PLAIN WASHER 1/4	4	50	SEDAN					
	801	77710-89911	SCREW-TAPPING CENTER FIX	1	10	SEDAN					
	901	77710-89909	TAPPING SCREW CENTER FIX	1	10	SEDAN					
	1001	08963-20510	SPRING NUT	2	50	SEDAN					
	1101	62410-E0100	RIM-HEAD LAMP RH	1	1	DX SUPER CUSTOM					
	02	62410-E0300	RIM-HEAD LAMP RH	1	1	SEDAN EXC SUPER D X CUSTOM					

NOTE:

© 1972 NISSAN MOTOR CO., LTD.

PRINTED IN JAPAN

RADIATOR GRILLE & FRONT BUMPER (SEDAN)

S	KEY NO.	PART NO.	DESCRIPTION	Q'TY	UNIT PKG FOR DIST.	APPLIED MODEL	APPLIED DATE FROM	APPLIED DATE UP TO	ICA N	ICA F	SUPERSEDED
	1201	62411-E0100	RIM-HEAD LAMP LH	1	1	DX SUPER CUSTOM					
	02	62411-E0300	RIM-HEAD LAMP LH	1		SEDAN EXC SUPER D X CUSTOM					
	1301	77710-89910	SCREW-TAPPING	6	10	DX SUPER CUSTOM					
	1401	63831-10600	SCREW-TAPPING	8	10	SEDAN EXC DX SUPE R CUSTOM					
	1501	08964-10410	NUT SPRING	6	50	DX SUPER CUSTOM					
	1601	62351-E0100	SURROUND-MOULDING UPPER	1	1	SEDAN					
	02	62351-E0199	SURROUND-MOULDING UPPER	1	1	SEDAN			C	C	62351-E0100
	1701	62352-E0100	SURROUND-MOULDING LOWER	1	1	SEDAN					
	02	62352-E0199	SURROUND-MOULDING LOWER	1	1	SEDAN			C	C	62352-E0100
	1801	62353-E0100	SURROUND-MOULDING SIDE RH	1	5	SEDAN					
	1901	62354-E0100	SURROUND-MOULDING SIDE LH	1	5	SEDAN					
	2001	77710-89911	TAPPING-SCREW	12	10	SEDAN					
	2101	00915-41010	WASHER-PLAIN	7	50	SEDAN					
	2201	77770-89913	RIVET	7	10	SEDAN					
	2301	62500-E3200	ASSY-PAD CORE SUPPORT	1	1	SEDAN			Y	Y	62500-E0100
	2401	62511-E0100	SUPPORT-PAD CORE UPPER	1	1	SEDAN					
	2501	62516-E0100	ASSY-STAY R/C SUPPORT	1	1	SEDAN					
	2601	00114-41662	BOLT-WITH LOCK WASHER	1	50	SEDAN					
◄	2701	62531-E0100	RUBBER-SEALING RADIATOR	1	5	SEDAN					
	02	62531-E0101	RUBBER-SEALING RADIATOR	1	5	SEDAN			C	N	62531-E0100
	2801	62532-E0100	RETAINER-SEALING RADIATOR	1	5	SEDAN					
	2901	96815-80700	RIVET-CANOE	4	10	SEDAN					

NOTE:

© 1972 NISSAN MOTOR CO., LTD.

REVISED: DECEMBER, 1972

PRINTED IN JAPAN

RADIATOR GRILLE & FRONT BUMPER (SEDAN)

S	KEY NO.	PART NO.	DESCRIPTION	Q'TY	UNIT PKG FOR DIST.	APPLIED MODEL	APPLIED DATE FROM	APPLIED DATE UP TO	ICA N	ICA F	SUPERSEDED
◄	3001	63840-73000	COMP-HOOD BUMPER	2	5	SEDAN					
	02	63840-46500	COMP-HOOD BUMPER	2	10	SEDAN			Y	N	63840-73000
	3101	00911-34410	NUT-LOCK	2	50	SEDAN					
	3201	00916-31410	WASHER-LOCK	2	50	SEDAN					
	3301	62681-E0100	BUMPER-FRONT	1	1	SEDAN					
	3401	62691-E0100	GRILLE-BUMPER FRONT RH	1	1	SEDAN		0969			
	02	62691-E3200	GRILLE-BUMPER FRONT RH	1	1	SEDAN	1069				
	3501	62692-E0100	GRILLE-BUMPER FRONT LH	1	1	SEDAN		0969			
	02	62692-E3200	GRILLE-BUMPER FRONT LH	1	1	SEDAN	1069				
	3601	62681-E0100	ASSY-STAY FRONT BUMPER RH	1	1	SEDAN					
	3701	62682-E0100	ASSY-STAY FRONT BUMPER LH	1	1	SEDAN					
	3801	62676-E0150	ASSY-BRACKET FRONT BUMPER SIDE RH	1	5	SEDAN		0969			
◄	02	62676-E0100	ASSY-BRACKET FRONT BUMPER SIDE RH	1	5	SEDAN	1069				
	03	62676-E0150	ASSY-BRACKET FRONT BUMPER SIDE RH	1	5	SEDAN			Y	N	62676-E0100
	3901	62677-E0150	ASSY-BRACKET FRONT BUMPER SIDE LH	1	5	SEDAN		0969			
◄	02	62677-E0100	ASSY-BRACKET FRONT BUMPER SIDE LH	1	5	SEDAN	1069				
	4001	62666-73000	ASSY-BOLT BUMPER	6	10	SEDAN					
	4101	00915-51510	WASHER-PLAIN	6	50	SEDAN					
	4201	00915-21510	WASHER-SPRING	6	50	SEDAN					
	4301	00911-24510	NUT	6	50	SEDAN					

NOTE:

© 1972 NISSAN MOTOR CO., LTD.

PRINTED IN JAPAN

RADIATOR GRILLE & FRONT BUMPER (SEDAN)

S	KEY NO.	PART NO.	DESCRIPTION	Q'TY	UNIT PKG FOR DIST.	APPLIED MODEL	APPLIED DATE FROM	APPLIED DATE UP TO	ICA N	ICA F	SUPERSEDED
	4401	62666-73000	ASSY-BOLT BUMPER	2	10	SEDAN					
	4501	00915-51510	WASHER-PLAIN	2	50	SEDAN					
	4601	00915-21510	WASHER-SPRING	2	50	SEDAN					
	4701	00911-24510	HEX NUT 5116-24	2	50	SEDAN					
	4801	00154-83010	BOLT-POINTED	4	10	SEDAN					
	4901	00915-51810	WASHER-PLAIN	4	50	SEDAN					
	5001	00915-21810	WASHER-SPRING	4	50	SEDAN					
	5101	00114-52562	BOLT	2		SEDAN					
	5201	00114-52562	SPECIAL-WASHER	2		SEDAN					
	5301	00915-21510	WASHER-SPRING	2	50	SEDAN					
	5401	77730-89912	NUT-SPRING	4	50	SEDAN					
	5501	77710-89911	SCREW-TAPPING	4	10	SEDAN					
	5601	62610-E0100	ASSY-PANEL FRONT	1	1	SEDAN					
	5701	00414-01610	SCREW-MACHINE	6	50	SEDAN					
	5801	00915-41010	WASHER-PLAIN	6	50	SEDAN					
	5901	00915-11010	WASHER-SPRING	6	50	SEDAN					

NOTE:

© 1972 NISSAN MOTOR CO., LTD.

REVISED: DECEMBER, 1972
PRINTED IN JAPAN

NOTE

Printed in Japan

NISSAN MOTOR CO., LTD.

FRONT FENDER, HEAD LAMP CASE, HOOD LEDGE & HOOD (SEDAN)

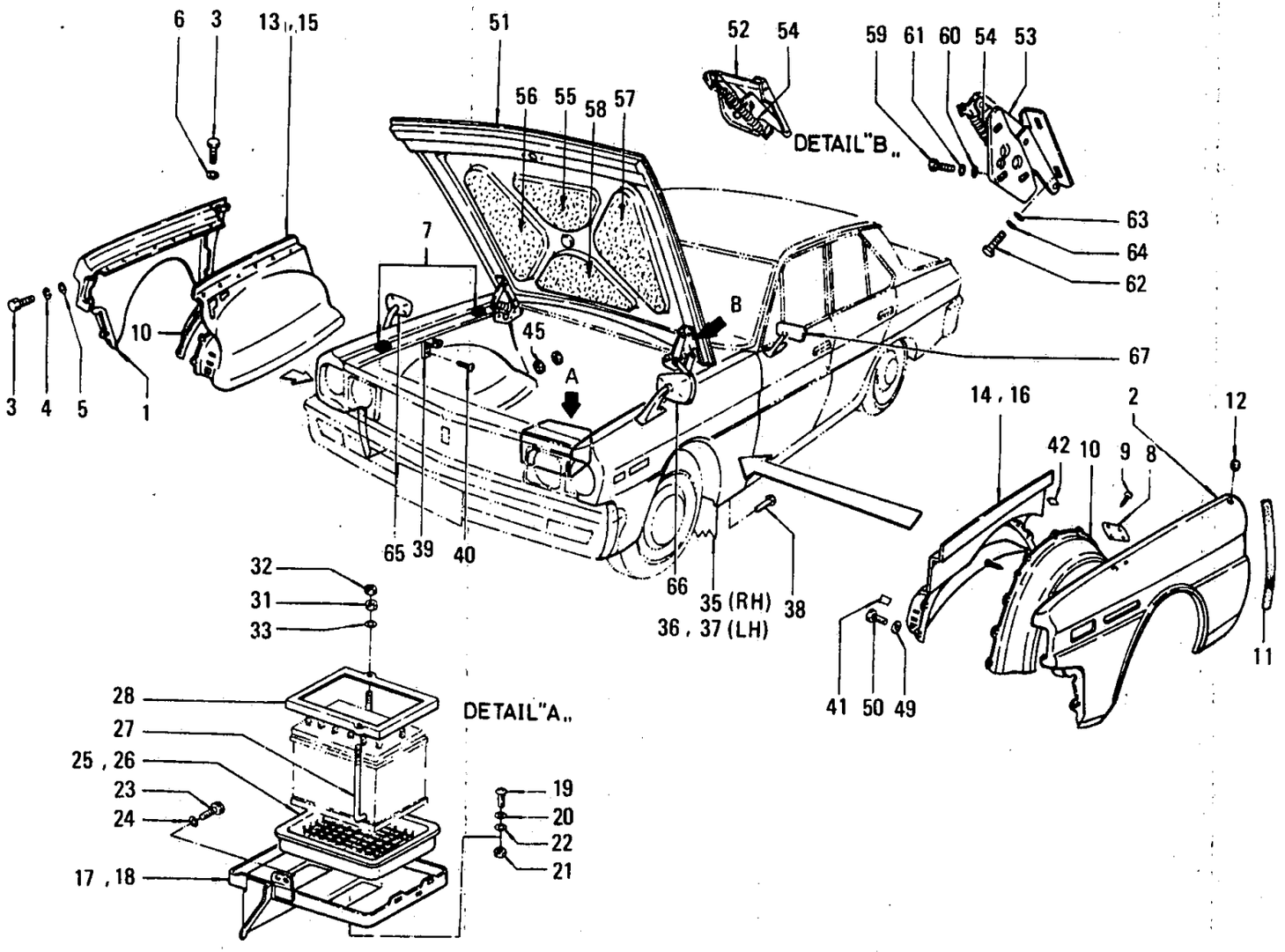

ILLUSTRATION **213**

© 1972 NISSAN MOTOR CO., LTD.

REVISED: DECEMBER, 1972

PRINTED IN JAPAN

FRONT FENDER, HEAD LAMP CASE, HOOD LEDGE & HOOD (SEDAN)

S	KEY NO.	PART NO.	DESCRIPTION	QTY	UNIT PKG FOR DIST.	APPLIED MODEL	APPLIED DATE FROM	APPLIED DATE UP TO	ICA N	ICA F	SUPERSEDED
	101	63100-E1331	ASSY-FRONT FENDER RH	1	2	SEDAN					
	201	63101-E1331	ASSY-FRONT FENDER LH	1	2	SEDAN			Y	Y	63100-E1331
	301	00114-41610	BOLT-FENDER FIXING	44	50	SEDAN					
	401	00915-11410	WASHER-SPRING	44	50	SEDAN					
	501	00915-41410	WASHER-PLAIN	38	50	SEDAN					
	601	00915-51410	WASHER-PLAIN	6	50	SEDAN					
	701	63845-E0101	BUMPER-HOOD SIDE	4	10	SEDAN					
	801	63858-E0100	COVER-ANTENNA HOLE	1	5	SEDAN					
	901	00514-01010	SCREW-TAPPING	4	50	SEDAN					
	1001	63860-E0100	SEAL-WHEEL HOUSE	2	5	SEDAN					
	1101	63146-73000	RUBBER-FRONT FENDER RR	4	5	SEDAN					
	1201	77700-89919	PLUG-ANTENNA HOLE 25	1	10	SEDAN					
●	1301	64100-E0100	ASSY-HOOD LEDGE RH	1	1	SEDAN					
	02	64100-E3200	ASSY-HOOD LEDGE RH	1	1	SEDAN	1069				
●	1401	64101-E0100	ASSY-HOOD LEDGE LH	1	1	SEDAN					
	02	64101-E3200	ASSY-HOOD LEDGE LH	1	1	SEDAN					
	1501	63150-E0100	ASSY-WHEEL HOUSE FRONT RH	1	1	SEDAN					
	1601	63151-E0100	ASSY-WHEEL HOUSE FRONT LH	1	1	SEDAN					
	1701	24420-E1101	ASSY-BATTERY SUPPORT	1	1	SEDAN EXC DIESEL		0969			
	02	24420-E1101	ASSY-BATTERY SUPPORT	1	1	STANDARD	1069				
	03	24420-E0901	ASSY-BATTERY SUPPORT	1	1	DIESEL					
	04	24420-E3201	ASSY-BATTERY SUPPORT	1	1	SEDAN EXC STD	1069				
	1801	24421-E0100	ASSY-BATTERY SUPPORT	1	5	SEDAN EXC DIESEL					

NOTE:

© 1972 NISSAN MOTOR CO., LTD.

PRINTED IN JAPAN

FRONT FENDER, HEAD LAMP CASE, HOOD LEDGE & HOOD (SEDAN)

S	KEY NO.	PART NO.	DESCRIPTION	Q'TY	UNIT PKG FOR DIST.	APPLIED MODEL	APPLIED DATE FROM	APPLIED DATE UP TO	ICA N	ICA F	SUPERSEDED
	1901	00314-41610	SCREW-MACHINE	1	50	SEDAN					
	2001	00915-11410	WASHER-SPRING	1	50	SEDAN					
	2101	00911-14410	NUT-HEX	1	50	SEDAN					
	2201	00915-51410	WASHER-PLAIN	1	50	SEDAN					
	02	00915-51410	WASHER-PLAIN	4	50	SEDAN					
	2301	00369-41615	SCREW-MACHINE WITH LOCK WASHER	4		SEDAN					
	2401	00915-51410	WASHER-PLAIN	4	50	SEDAN					
•	2501	24428-20500	TRAY-BATTERY	1	1	SEDAN EXC DIESEL					
	02	24428-89900	TRAY-BATTERY	1	1	SEDAN EXC DIESEL			Y	N	24428-20500
	2601	24428-E0101	TRAY-BATTERY	1	1	DIESEL					
	2701	24423-35001	ROD-BATTERY FIXING	2	5	SEDAN					
	2801	24420-14800	ASSY-FRAME BATTERY FIXING	1	1	SEDAN					
	2901	24425-73000	ASSY-BAR BATTERY FIXING	1	1	SEDAN					
	3001	24429-73501	COVER-BATTERY	1	1	OP					
	3101	00911-34410	NUT-LOCK	2	50	SEDAN					
	3201	00911-14410	NUT	2	50	SEDAN					
	3301	00915-51410	WASHER-PLAIN	2	50	SEDAN					
	3401	64836-73001	COVER-VOLTAGE REGULATOR	1	1	OP L DRIVE					
	3501	64836-E0101	SPLASH-RUBBER HOOD LEDGE RH	1	1	SEDAN EXC DIESEL RD OP LD					
	3601	64837-E0101	SPLASH-RUBBER HOOD LEDGE LH	1	1	SEDAN RD					
	3701	64837-E1200	SPLASH-RUBBER HOOD LEDGE LH	1	1	SEDAN LD					
	3801	96815-B0700	RIVET-CANOE	12	10	SEDAN					

NOTE:

© 1972 NISSAN MOTOR CO., LTD.

REVISED: DECEMBER, 1972
PRINTED IN JAPAN

FRONT FENDER, HEAD LAMP CASE, HOOD LEDGE & HOOD (SEDAN)

S	KEY NO.	PART NO.	DESCRIPTION	QTY	UNIT PKG FOR DIST.	APPLIED MODEL	APPLIED DATE FROM	APPLIED DATE UP TO	ICA N	ICA F	SUPERSEDED
●	3901	64838-E0101	ASSY-BRACKET FUEL STRAINER	1	5	SEDAN EXC DIESEL					
	02	16419-28200	ASSY-BRACKET FUEL STRAINER	1	5	SEDAN EXC DIESEL			Y	N	64838-E0101
●	4001	00511-01010	SCREW-TAPPING	2	50	SEDAN EXC DIESEL					
	02	00511-01012	SCREW-TAPPING	2		SEDAN EXC DIESEL			Y	N	00511-01010
	4101	64803-E0100	COVER-HOOD LEDGE HOLE FRONT	1	5	SEDAN EXC DIESEL					
	4201	64804-E0100	COVER-HOOD LEDGE HOLE RR,	1	5	SEDAN EXC DIESEL					
	4301	00514-01310	SCREW-TAPPING TYPE B	3	50	SEDAN					
	4401	64836-69000	COVER-VOLTAGE REGULATOR	1	1	SEDAN					
	02	64836-73001	COVER-VOLTAGE REGULATOR	1	1	OP L DRIVE					
	4501	77700-89916	PLUG-RUBBER 45	1	10	SEDAN					
●	4601	00314-40810	SCREW-MACHINE	7	50	SEDAN					
	02	00314-40812	SCREW-MACHINE	7	1	SEDAN			Y	N	00314-40810
	4701	64821-32200	PLUG 10 LOCATE HOLE	2	50	SEDAN					
	4801	64840-E0100	ASSY-STAY EXTEN H/L	2	1	SEDAN					
	4901	00915-51410	WASHER-PLAIN 1/4 TYPE 2	4	50	SEDAN					
	5001	00114-42565	BOLT-WITH LOCK WASHER 1/4-28	4	50	SEDAN					
	5101	65100-E0130	ASSY-HOOD	1	1	SEDAN					
	5201	65400-E0125	ASSY-HOOD HINGE RH	1	1	SEDAN			Y	Y	65400-E0100
	5301	65401-E0125	ASSY-HOOD HINGE LH	1	1	SEDAN			Y	Y	65401-E0100
	5401	65410-E0199	SPRING-HOOD HINGE	2	2	SEDAN			Y	Y	65410-E0100
	5501	65820-E0100	INSULATOR-HOOD A	1	1	SEDAN					
	5601	65821-E0100	INSULATOR-HOOD B	1	1	SEDAN					
	5701	65822-E0100	INSULATOR-HOOD C	1	1	SEDAN					

NOTE:

© 1972 NISSAN MOTOR CO., LTD.

PRINTED IN JAPAN

FRONT FENDER, HEAD LAMP CASE, HOOD LEDGE & HOOD (SEDAN)

S	KEY NO.	PART NO.	DESCRIPTION	QTY	UNIT PKG FOR DIST.	APPLIED MODEL	APPLIED DATE FROM	APPLIED DATE UP TO	ICA N	ICA F	SUPERSEDED
	5601	65823-E0100	INSULATOR-HOOD D	1	1	SEDAN					
	5901	00144-62010	BOLT-POINTED	6	50	SEDAN					
	6001	00915-41610	WASHER-PLAIN	6	50	SEDAN					
	6101	00915-11610	WASHER-SPRING	6	50	SEDAN					
	6201	00144-52010	BOLT-POINTED	4	50	SEDAN					
	6301	00915-41510	WASHER-PLAIN	4	50	SEDAN					
	6401	00915-11510	WASHER-SPRING	4	50	SEDAN					
	6501	96301-E0100	ASSY-BACK MIRROR RH	1	5	SEDAN					
	6601	96302-E0100	ASSY-BACK MIRROR LH	1	5	SEDAN					
	6701	96301-10800	ASSY-BACK MIRROR DOOR FIX	1	1	OP L DRIVE					

NOTE:

© 1972 NISSAN MOTOR CO., LTD.

REVISED: DECEMBER, 1972
PRINTED IN JAPAN

NOTE

Printed in Japan

NISSAN MOTOR CO., LTD.

HOOD LOCK CONTROL (SEDAN R DRIVE)

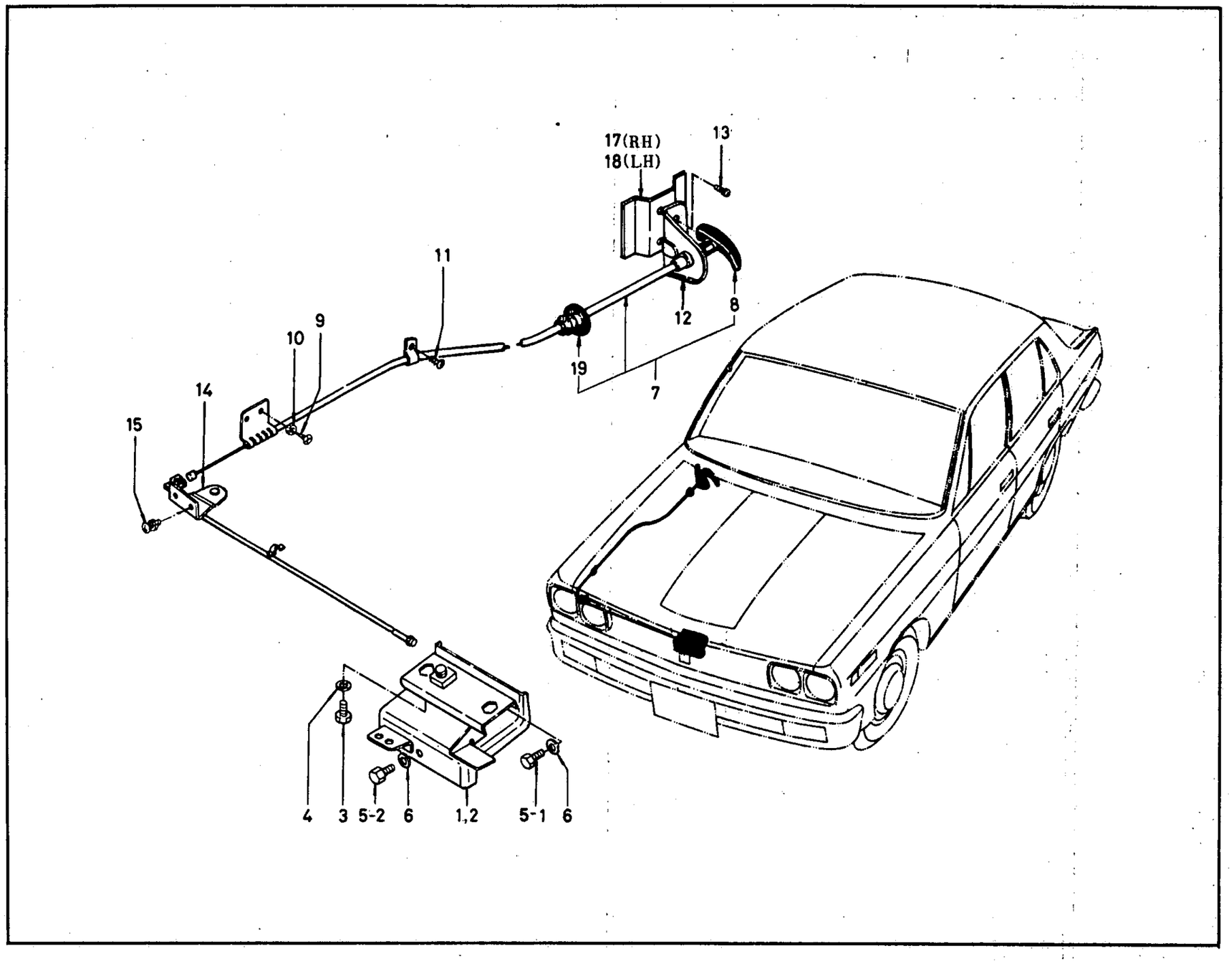

ILLUSTRATION **214-1**

© 1972 NISSAN MOTOR CO., LTD.

REVISED: DECEMBER, 1972

PRINTED IN JAPAN

HOOD LOCK CONTROL (SEDAN L DRIVE)

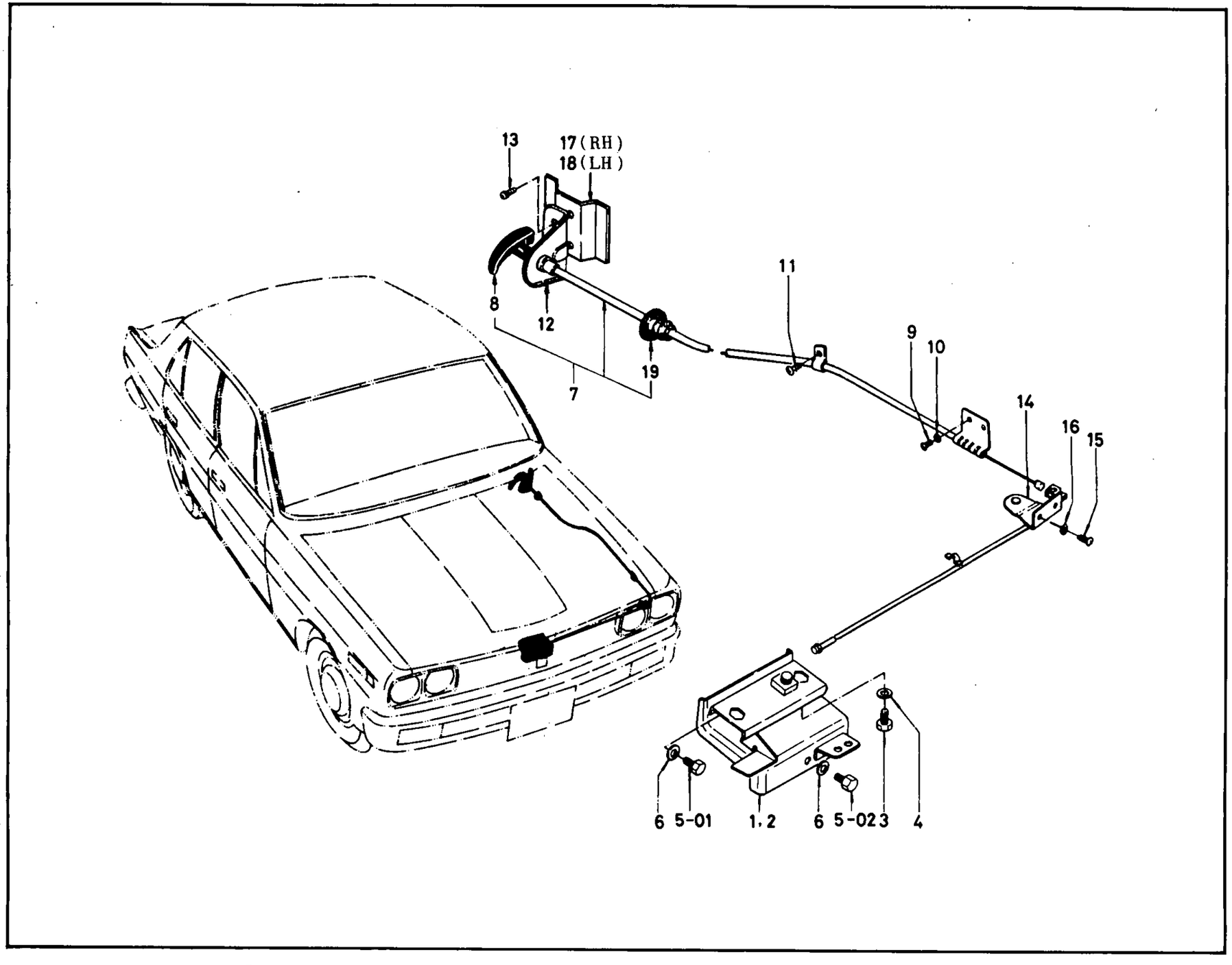

REVISED: DECEMBER, 1972

© 1972 NISSAN MOTOR CO., LTD.

PRINTED IN JAPAN

HOOD LOCK CONTROL (SEDAN)

S	KEY NO.	PART NO.	DESCRIPTION	QTY	UNIT PKG FOR DIST.	APPLIED MODEL	APPLIED DATE FROM	APPLIED DATE UP TO	ICA N	ICA F	SUPERSEDED
	101	65601-E0100	ASSY-HOOD LOCK MALE	1	1	SEDAN					
	201	65610-E0100	ASSY-HOOD LOCK FEMALE	1	1	R DRIVE					
	02	65610-E1100	ASSY-HOOD LOCK FEMALE	1	1	L DRIVE					
	301	00114-42062	BOLT-MALE FIX	2		SEDAN					
	02	00314-41614	BOLT-MALE FIX	2	50	SEDAN					
	401	00915-51410	WASHER-PLAIN MALE FIX	2	50	SEDAN					
	501	00114-41262	BOLT-FEMALE FIX	2		SEDAN					
	02	00114-41662	BOLT-FEMALE FIX	1	50	SEDAN					
	03	00314-41614	BOLT-FEMALE FIX	3	50	SEDAN					
	601	00915-51410	WASHER-PLAIN	3	50	SEDAN					
	701	65701-E0100	COMP-CABLE HOOD LOCK CONTROL	1	5	R DRIVE					
	02	65701-E1100	COMP-CABLE HOOD LOCK CONTROL	1	5	L DRIVE					
	801	65649-10600	ASSY-HANDLE HOOD LOCK	1	5	SEDAN					
	02	65649-E2000	ASSY-HANDLE HOOD LOCK	1	5	SEDAN			N	N	65649-10600
	901	00514-01010	SCREW-TAPPING	2	50	SEDAN					
	1001	00915-41010	WASHER-PLAIN	2	50	SEDAN					
	1101	00514-01010	SCREW-TAPPING	1	50	SEDAN					
	1201	65712-E0100	BRACKET-HOOD LOCK	1	5	SEDAN					
	1301	00314-41214	SCREW-WITH SPRING WASHER	2		SEDAN					
	1401	65705-E0100	ASSY-ROD HOOD LOCK CONTROL	1	1	R DRIVE					
	02	65705-E1100	ASSY-ROD HOOD LOCK CONTROL	1	1	L DRIVE					
	1501	00314-01014	SCREW WITH SPRING WASHER	2		SEDAN					
	1601	00915-41010	WASHER-PLAIN	2	50	SEDAN					

NOTE:

© 1972 NISSAN MOTOR CO., LTD.

REVISED: DECEMBER, 1972

PRINTED IN JAPAN

HOOD LOCK CONTROL (SEDAN)

S	KEY NO.	PART NO.	DESCRIPTION	QTY	UNIT PKG FOR DIST.	APPLIED MODEL	APPLIED DATE FROM	APPLIED DATE UP TO	ICA N	ICA F	SUPERSEDED
	1701	66415-E0100	SUPPORT HOOD LOCK CONTROL RH	1	5	SEDAN					
	1801	66416-E0100	SUPPORT HOOD LOCK CONTROL LH	1	5	SEDAN					
	1901	24256-36700	GROMMET-RUBBER	1	10	SEDAN					

NOTE:

© 1972 NISSAN MOTOR CO., LTD.

PRINTED IN JAPAN

NOTE

NOTE

Printed in Japan

NISSAN MOTOR CO., LTD.

COWL PANEL & FITTING (SEDAN)

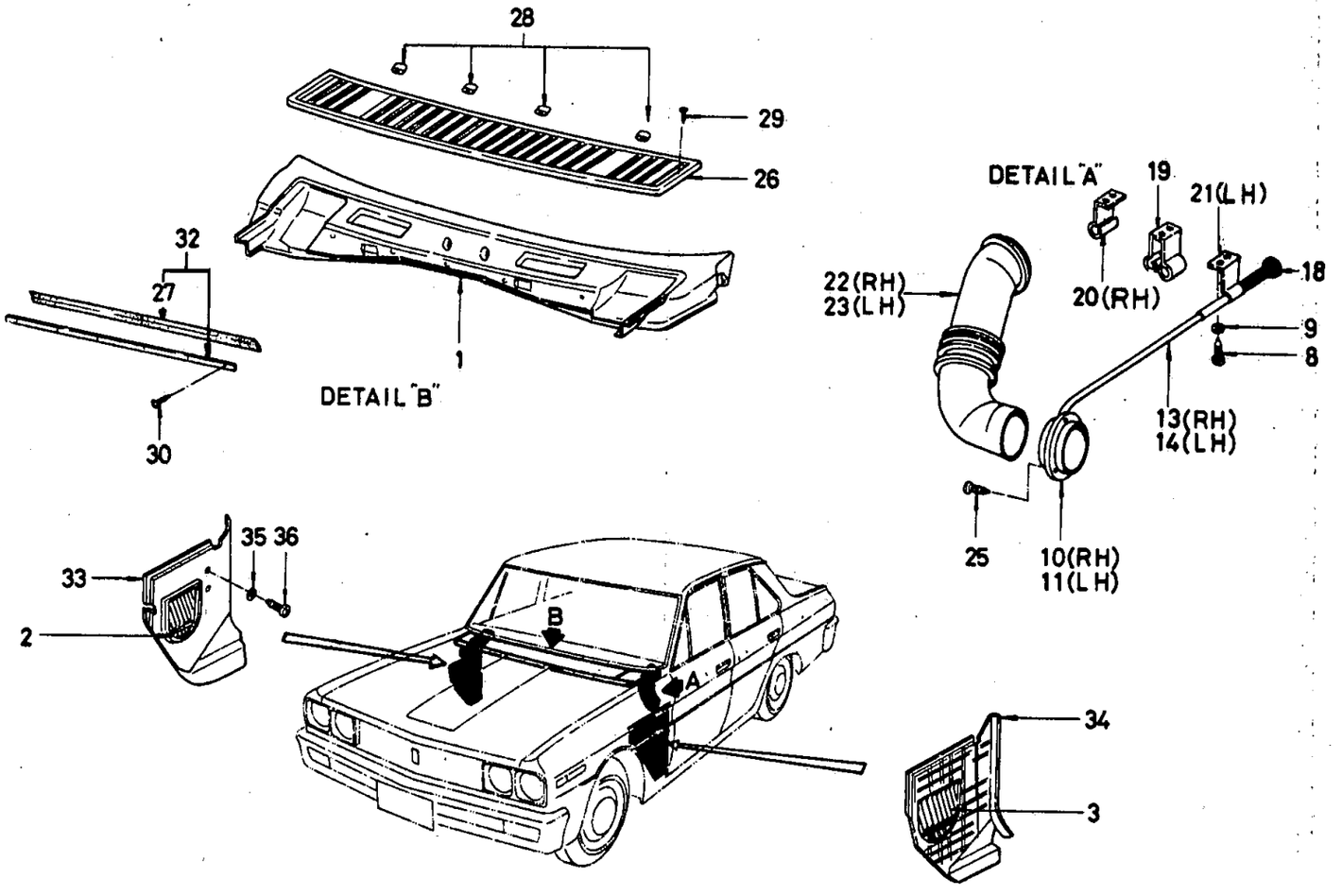

© 1972 NISSAN MOTOR CO., LTD.

REVISED: DECEMBER, 1972

PRINTED IN JAPAN

COWL PANEL & FITTING (SEDAN)

S	KEY NO.	PART NO.	DESCRIPTION	QTY	UNIT PKG FOR DIST.	APPLIED MODEL	APPLIED DATE FROM	APPLIED DATE UP TO	ICA N	ICA F	SUPERSEDED
	101	66300-E0130	ASSY-COWL TOP	1	1	R DRIVE					
	02	66300-E1130	ASSY-COWL TOP	1	1	L DRIVE					
•	201	66501-73000	ASSY-AIR VENT RH	1		SEDAN					
	02	66512-73050	ASSY-AIR VENT RH	1	1	SEDAN			Y	N	66501-73000
•	301	66502-73000	ASSY-AIR VENT LH	1		SEDAN					
	401	66512-73050	ASSY-CASE AIR VENT WITH PACKING	2	1	SEDAN					
	501	66513-73000	PACKING-AIR VENT	2	1	SEDAN					
•	601	00510-81310	SCREW-TAPPING #8AX13	2	50	SEDAN					
	02	00510-81312	SCREW-TAPPING #8AX13	2	50	SEDAN			Y	N	00510-81310
•	701	00511-01010	SCREW-TAPPING #10AX10	6	50	SEDAN					
	02	00511-01012	SCREW-TAPPING #10AX10	6	50	SEDAN			Y	N	00511-01010
	801	68685-38700	SCREW-MACHINE #10-32X12	2	50	SEDAN					
	901	66534-73000	WASHER-LOCK SPRING #10	2	50	SEDAN					
	1001	66539-E0101	ASSY-VALVE 2ND VENT RH	1	1	SEDAN					
	1101	66540-E0101	ASSY-VALVE 2ND VENT LH	1	1	SEDAN					
	1201	66514-73000	ASSY-VALVE AIR VENT	2	1	SEDAN					
	1301	66545-E0101	ASSY-CABLE 2ND VENT RH	1	5	SEDAN					
	1401	66546-E0101	ASSY-CABLE 2ND VENT LH	1	5	SEDAN					
	1501	66532-E0101	ASSY-CABLE AIR VENT	2	5	SEDAN					
	1601	08310-41214	SCREW-MACHINE WITH WASHER	1	50	SEDAN					
	1701	66562-E0100	ASSY-KNOB AIR VENT	2	5	SEDAN					
	1801	66563-E0100	ASSY-KNOB 2ND AIR VENT	2	5	SEDAN					

NOTE:

REVISED: DECEMBER, 1972
© 1972 NISSAN MOTOR CO., LTD.

PRINTED IN JAPAN

COWL PANEL & FITTING (SEDAN)

S	KEY NO.	PART NO.	DESCRIPTION	QTY	UNIT PKG FOR DIST.	APPLIED MODEL	APPLIED DATE FROM	APPLIED DATE UP TO	ICA N	ICA F	SUPERSEDED
	1901	66558-E0100	BRACKET-VENTILATOR KNOB	2	5	SEDAN					
	2001	66558-E0101	BRACKET-VENTILATOR KNOB RH	1	5	OP SEDAN					
	2101	66559-E0101	BRACKET-VENTILATOR KNOB LH	1	5	OP SEDAN					
	2201	66554-E0100	DUCT-2ND VENT RH	1	1	SEDAN					
	2301	66555-E0100	DUCT-2ND VENT LH	1	1	R DRIVE					
	02	66555-E1200	DUCT-2ND VENT LH	1	1	L DRIVE					
	2401	66590-E0100	COVER-2ND VENT HOLE	2	5	OP SEDN RD					
•	2501	00511-01010	SCREW-TAPPING #10X10	6	50	SEDAN					
	02	00511-01012	SCREW-TAPPING #10X10	6	50	OP SEDAN RD					
	2601	66801-E0151	GRILLE-COWL TOP	1	1	R DRIVE					
•	02	66801-E0101	GRILLE-COWL TOP	1	1	R DRIVE					
	03	66801-E1151	GRILLE-COWL TOP	1	1	L DRIVE					
•	04	66801-E1101	GRILLE-COWL TOP	1	1	L DRIVE					
	2701	66822-E0101	SEALING-RUBBER COWL TOP	2	5	SEDAN			Y	Y	66822-E0100
	2801	66312-10600	CAP-COWL GRILLE CLIP	4	10	SEDAN					
	2901	77710-89913	SCREW-TAPPING #6BX16	2	50	SEDAN					
	3001	00510-61310	SCREW-TAPPING #6AX13	8	50	SEDAN					
	3101	00915-40610	WASHER-PLAIN #6	2	50	SEDAN					
	3201	66810-E0100	ASSY-RUBBER COWL TOP	1	1	SEDAN					
	3301	66900-E0100	FINISH-DASH SIDE RH	1	1	SEDAN					
	02	66900-E0101	FINISH-DASH SIDE RH	1	1	SEDAN					
	03	66900-E0102	FINISH-DASH SIDE RH	1	1	SEDAN			Y	Y	66901-E0102
	04	66900-E0103	FINISH-DASH SIDE RH	1	1	SEDAN					

NOTE:

© 1972 NISSAN MOTOR CO., LTD.

REVISED: DECEMBER, 1972
PRINTED IN JAPAN

COWL PANEL & FITTING (SEDAN)

S	KEY NO.	PART NO.	DESCRIPTION	QTY	UNIT PKG FOR DIST.	APPLIED MODEL	APPLIED DATE FROM	APPLIED DATE UP TO	ICA N	ICA F	SUPERSEDED
	3305	66900-E0500	FINISH-DASH SIDE RH	1	1	SEDAN					
	3401	66901-E4900	FINISH-DASH SIDE LH	1	1	SEDAN			Y	Y	66901-E0100
	02	66901-E4901	FINISH-DASH SIDE LH	1	1	SEDAN			Y	Y	66901-E0101
	03	66901-E4902	FINISH-DASH SIDE LH	1	1	SEDAN					
	04	66901-E4903	FINISH-DASH SIDE LH	1	1	SEDAN			Y	Y	66901-E0103
	05	66901-E4904	FINISH-DASH SIDE LH	1	1	SEDAN			Y	Y	66901-E0500
	3501	00915-41442	WASHER-PLAIN	2	50	SEDAN					
	3601	00414-41242	SCREW-MACHINE	2	50	SEDAN					

NOTE:

© 1972 NISSAN MOTOR CO., LTD.

PRINTED IN JAPAN

NOTE

NOTE

Printed in Japan

NISSAN MOTOR CO., LTD.

DASH PANEL, DASH SIDE PANEL & INSTRUMENT (SEDAN R DRIVE)

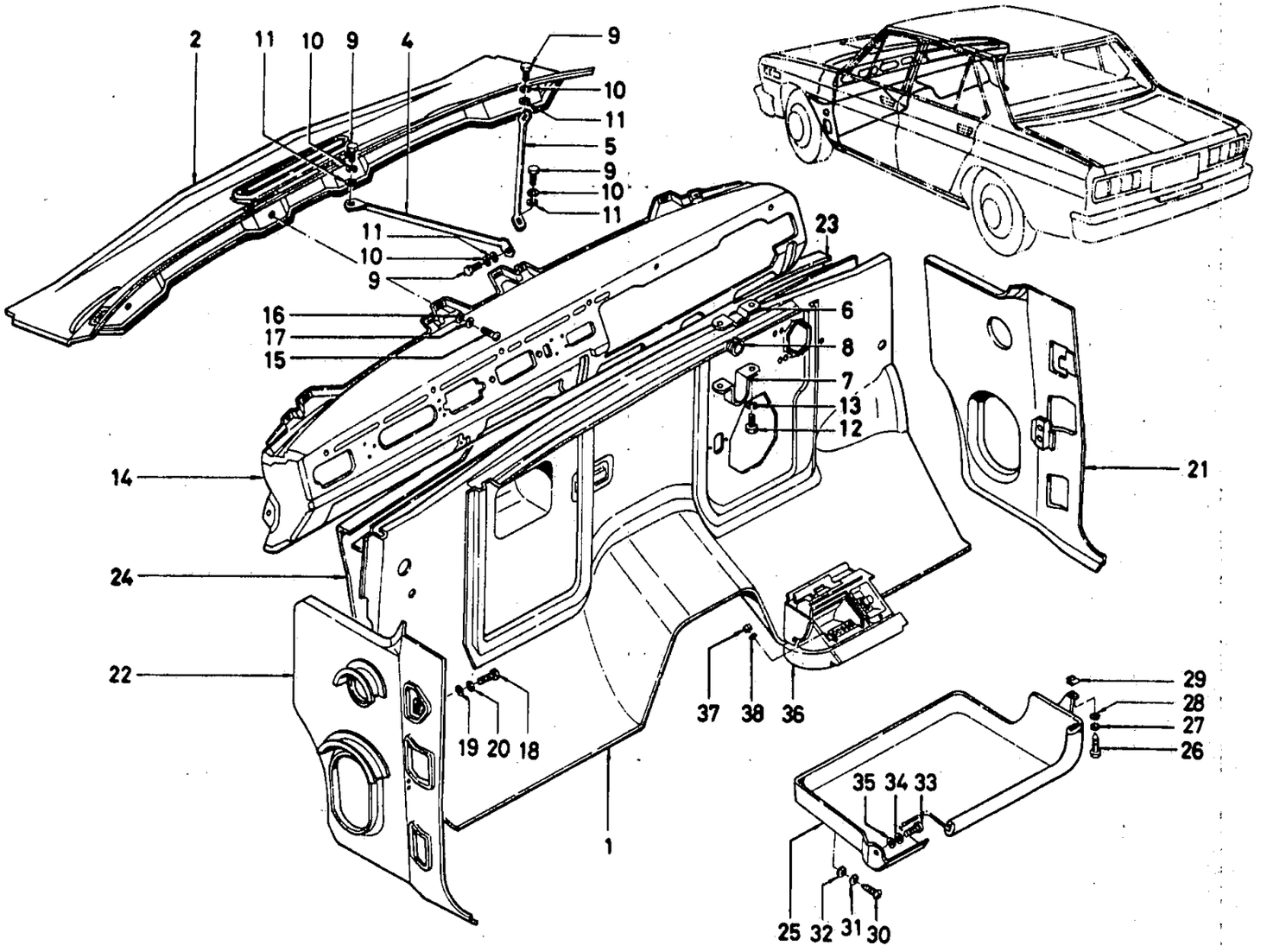

ILLUSTRATION **216**

© 1972 NISSAN MOTOR CO., LTD.

REVISED: DECEMBER, 1972

PRINTED IN JAPAN

DASH PANEL, DASH SIDE PANEL & INSTRUMENT (SEDAN R DRIVE)

S	KEY NO.	PART NO.	DESCRIPTION	QTY	UNIT PKG FOR DIST.	APPLIED MODEL	APPLIED DATE FROM	APPLIED DATE UP TO	ICA N	ICA F	SUPERSEDED
	101	67101-E0130	ASSY-PANEL DASH LOWER	1	1	SEDAN R DRIVE					
	02	67101-E3230	ASSY-PANEL DASH LOWER	1	1	SEDAN R DRIVE					
•	03	67101-E0930	ASSY-PANEL DASH LOWER	1		OP DISEL (R DRIVE)					
	201	67102-E0130	ASSY-PANEL DASH UPPER	1	1	SEDAN R DRIVE			Y	N	67102-E0100
	301	67116-E0150	ASSY-FRAME WIND SHIELD UPPER & LOWER	1	1	SEDAN R DRIVE					
	401	48324-E0101	STAY-STEERING MOUNTING INNER	1	1	SEDAN R DRIVE					
	501	48325-E0101	STAY-STEERING MOUNTING OUTER	1	1	SEDAN R DRIVE					
	601	48321-E0100	CLAMP-STEERING POST UPPER	1	1	SEDAN R DRIVE					
	701	48322-E0100	CLAMP-STEERING LOWER	1	1	SEDAN R DRIVE					
	801	48323-73001	RUBBER-STEERING MOUNTING	1	5	SEDAN R DRIVE					
	901	00144-52010	BOLT-POINTED 5/16X20	4	50	SEDAN R DRIVE					
	1001	00915-11510	WASHER-SPRING LOCK 5/16	4	50	SEDAN R DRIVE					
	1101	00915-41510	WASHER-PLAIN 5/16	4	50	SEDAN R DRIVE					
	1201	00144-52510	BOLT-POINTED 5/16X25	2		SEDAN R DRIVE					
	1301	00915-11510	WASHER-SPRING LOCK 5/16	2	50	SEDAN R DRIVE					
	1401	68100-E0100	ASSY-PANEL INSTRUMENT	1	1	SEDAN R DRIVE					
	1501	00414-41610	SCREW-MACHINE 1/4-28UNF	4	50	SEDAN R DRIVE					
	1601	00915-41410	WASHER-PLAIN 1/4	4	50	SEDAN R DRIVE					
	1701	00915-11410	WASHER-SPRING LOCK 1/4	4	50	SEDAN R DRIVE					
	1801	00144-52010	BOLT 5/16-24UFT	2	50	SEDAN R DRIVE					
	1901	00915-41510	WASHER-PLAIN 5/16	2	50	SEDAN R DRIVE					
	2001	00915-11510	WASHER-SPRING LOCK 5/16	2	50	SEDAN R DRIVE					

NOTE:

© 1972 NISSAN MOTOR CO., LTD.

PRINTED IN JAPAN

DASH PANEL, DASH SIDE PANEL & INSTRUMENT (SEDAN R DRIVE)

S	KEY NO.	PART NO.	DESCRIPTION	QTY	UNIT PKG FOR DIST.	APPLIED MODEL	APPLIED DATE FROM	APPLIED DATE UP TO	ICA N	ICA F	SUPERSEDED
	2101	- 66400-E0100	ASSY-PANEL DASH SIDE RH	1	1	SEDAN R DRIVE					
	2201	- 66401-E0100	ASSY-PANEL DASH SIDE LH	1	1	SEDAN R DRIVE					
	2301	- 66408-E0100	ASSY-PANEL AIR BOX RH	1	1	SEDAN R DRIVE					
	2401	- 66409-E0100	ASSY-PANEL AIR BOX LH	1	1	SEDAN R DRIVE					
	2501	- 96800-E0100	ASSY-PACKAGE TRAY	1	1	SEDAN R DRIVE					
	2601	- 00511-01342	SCREW-TAPPING #10	1		SEDAN R DRIVE					
	2701	- 00915-11040	WASHER-LOCK #10	1	50	SEDAN R DRIVE					
	2801	- 62328-32200	WASHER-SPECIAL	1	10	SEDAN R DRIVE					
	2901	- 08963-10540	NUT-SPRING #10	1		SEDAN R DRIVE					
	3001	- 00511-01942	SCREW-TAPPING #10	2		SEDAN R DRIVE					
	3101	- 00915-11040	WASHER-LOCK #10	2	50	SEDAN R DRIVE					
	3201	- 62328-32200	WASHER-SPECIAL	2	10	SEDAN R DRIVE					
	3301	- 00314-41642	SCREW-MACHINE	1	50	SEDAN R DRIVE					
	3401	- 00915-11410	WASHER-LOCK SPRING	1	50	SEDAN R DRIVE			Y	N	00915-11440
	3501	- 00915-51410	WASHER-PLAIN	1	50	SEDAN R DRIVE			Y	N	00915-51440
	3601	- 68800-E0100	COMP-ASH TRAY INSTRUMENT	1	1	SEDAN R DRIVE					
	3701	- 08911-10410	NUT-HEX	4	50	SEDAN R DRIVE					
	3801	- 08915-13410	SPRING-LOCK WASHER	4	50	SEDAN R DRIVE					

NOTE:

© 1972 NISSAN MOTOR CO., LTD.

ILLUSTRATION **216**

REVISED: DECEMBER, 1972

PRINTED IN JAPAN

NOTE

Printed in Japan

NISSAN MOTOR CO., LTD.

DASH PANEL, DASH SIDE PANEL & INSTRUMENT (SEDAN L DRIVE)

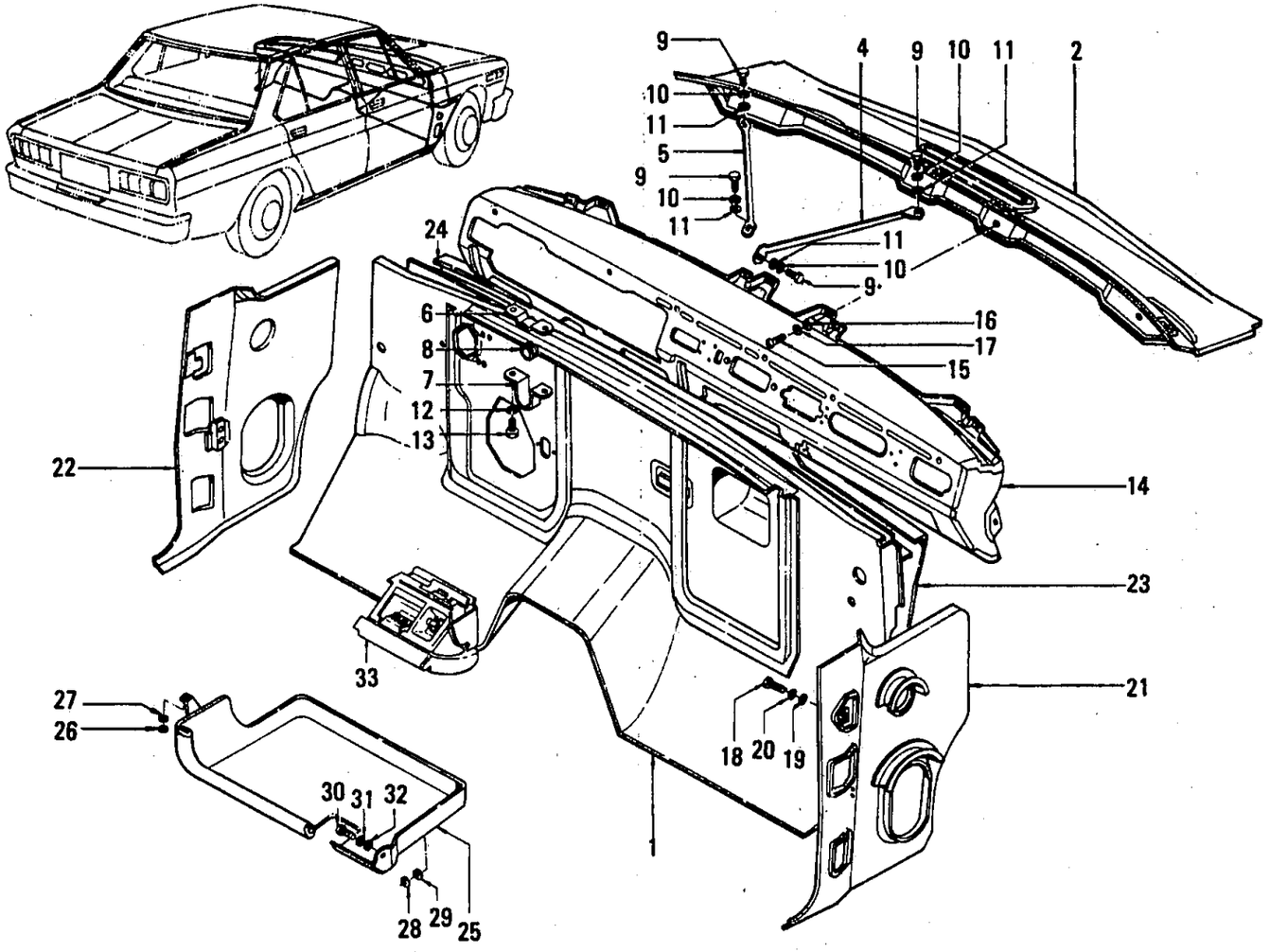

© 1972 NISSAN MOTOR CO., LTD.

REVISED: DECEMBER, 1972

PRINTED IN JAPAN

C

DASH PANEL, DASH SIDE PANEL & INSTRUMENT (SEDAN L DRIVE)

S	KEY NO.	PART NO.	DESCRIPTION	Q'TY	UNIT PKG FOR DIST.	APPLIED MODEL	APPLIED DATE FROM	APPLIED DATE UP TO	ICA N	ICA F	SUPERSEDED
*	101	67101-E1130	ASSY-PANEL DASH LOWER	1	1	SEDAN L DRIVE					
	102	67101-E3330	ASSY-PANEL DASH LOWER	1	1	SEDAN L DRIVE					
*	201	67102-E1130	ASSY-PANEL DASH UPPER	1	1	SEDAN L DRIVE			Y	Y	67102-E1100
	301	67116-E0150	ASSY-FRAME WIND SHELD	1	1	SEDAN L DRIVE					
	401	48324-E1100	ASSY-STAY STEERING MOUNTING INNER	1	1	SEDAN L DRIVE					
	501	48325-E1100	ASSY-STAY STEERING MOUNTING OUTER	1	1	SEDAN L DRIVE					
	601	48321-E0100	CLAMP-STEERING POST UPPER	1	1	SEDAN L DRIVE					
	701	48322-E0100	CLAMP-STEERING POST LOWER	1	1	SEDAN L DRIVE					
	801	48323-73001	RUBBER STEERING MOUNTING	1	5	SEDAN L DRIVE					
	901	00144-52010	BOLT-POINTED 5/16	4	50	SEDAN L DRIVE					
	1001	00915-11510	WASHER-SPRING LOCK 5/16	4	50	SEDAN L DRIVE					
	1101	00915-41510	WASHER-PLAIN 5/16	4	50	SEDAN L DRIVE					
	1201	00915-11510	WASHER-SPRING LOCK 5/16	2	50	SEDAN L DRIVE					
	1301	00144-53010	BOLT-POINTED 5/16X30	2	50	SEDAN L DRIVE					
	1401	68100-E1200	ASSY-PANEL LIST	1	1	SEDAN L DRIVE					
	1501	00414-41610	SCREW-MACHINE 1/4-28	4	50	SEDAN L DRIVE					
	1601	00915-41410	WASHER-PLAIN 1/4	4	50	SEDAN L DRIVE					
	1701	00915-11410	WASHER-SPRING LOCK 1/4	4	50	SEDAN L DRIVE					
	1801	00144-52010	BOLT 5/16-24	2	50	SEDAN L DRIVE					
	1901	00915-41510	WASHER-PLAIN 5/16	2	50	SEDAN L DRIVE					
	2001	00915-11510	WASHER-SPRING LOCK 5/16	2	50	SEDAN L DRIVE					
	2101	66400-E0100	ASSY-PANEL DASH SIDE RH	1	1	SEDAN L DRIVE					

NOTE:

REVISED: DECEMBER, 1972

© 1972 NISSAN MOTOR CO., LTD.

PRINTED IN JAPAN

DASH PANEL, DASH SIDE PANEL & INSTRUMENT (SEDAN L DRIVE)

S	KEY NO.	PART NO.	DESCRIPTION	Q'TY	UNIT PKG FOR DIST.	APPLIED MODEL	APPLIED DATE FROM	APPLIED DATE UP TO	ICA N	ICA F	SUPERSEDED
	2201	66401-E0100	ASSY-PANEL DASH SIDE LH	1	1	SEDAN L DRIVE					
	2301	66408-E0100	ASSY-PANEL AIR BOX RH	1	1	SEDAN L DRIVE					
	2401	66409-E0100	ASSY-PANEL AIR BOX LH	1	1	SEDAN L DRIVE					
	2501	96800-E1200	ASSY-PACKAGE TRAY	1	1	SEDAN L DRIVE					
	2601	00915-11040	WASHER-SPRING LOCK #10	1	50	SEDAN L DRIVE					
	2701	62328-32200	WASHER-SPECIAL	1	10	SEDAN L DRIVE					
	2801	00915-11040	WASHER-SPRING LOCK	2	50	SEDAN L DRIVE					
	2901	62328-32200	WASHER-SPECIAL	2	10	SEDAN L DRIVE					
	3001	00314-41642	SCREW-MACHIN	1	50	SEDAN L DRIVE					
	3101	00915-11410	WASHER-SPRING LOCK	1	50	SEDAN L DRIVE			Y	Y	00915-11440
	3201	00915-51410	WASHER-PLAIN	1	50	SEDAN L DRIVE			Y	Y	00915-51440
	3301	68800-E1200	COMP-ASH TRAY INSTRUMENT	1	1	SEDAN L DRIVE					

NOTE:

© 1972 NISSAN MOTOR CO., LTD.

REVISED: DECEMBER, 1972
PRINTED IN JAPAN

NOTE

Printed in Japan

NISSAN MOTOR CO., LTD.

DASH & INSTRUMENT TRIMMING (SEDAN R DRIVE)

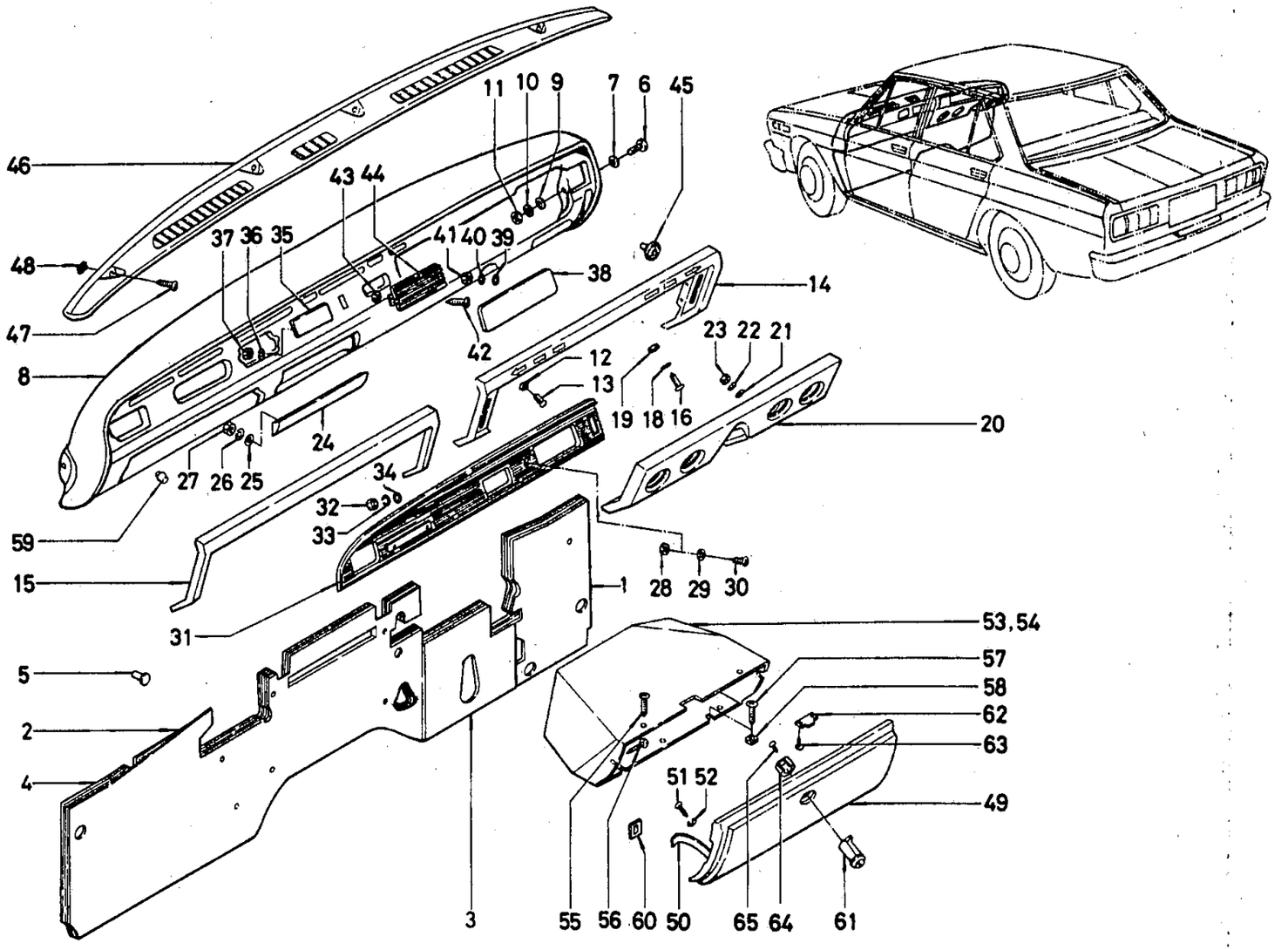

© 1972 NISSAN MOTOR CO., LTD.

REVISED: DECEMBER, 1972

PRINTED IN JAPAN

DASH & INSTRUMENT TRIMMING (SEDAN R DRIVE)

S	KEY NO.	PART NO.	DESCRIPTION	Q'TY	UNIT PKG FOR DIST.	APPLIED MODEL	APPLIED DATE FROM	APPLIED DATE UP TO	ICA N	ICA F	SUPERSEDED
	101	67900-E0100	ASSY-INSULATOR DASH RH	1	1	SEDAN R DRIVE					
	02	67900-E3200	ASSY-INSULATOR DASH RH	1	1	SEDAN R DRIVE					
	201	67901-E0100	ASSY-INSULATOR DASH LH	1	1	SEDAN R DRIVE					
	02	67901-E3400	ASSY-INSULATOR DASH LH	1	1	SEDAN R DRIVE					
	03	67901-E3200	ASSY-INSULATOR DASH LH	1	1	SEDAN R DRIVE DX					
	301	67902-E0100	ASSY-INSULATOR DASH CENTER	1	1	SEDAN R DRIVE					
	02	67902-E3200	ASSY-INSULATOR DASH CENTER	1	1	SEDAN R DRIVE					
	401	67901-E0300	ASSY-INSULATOR DASH LH	1	1	SEDAN R DRIVE EXC DELUXE					
	501	67930-73000	FASTENER-TRIM	5	10	SEDAN R DRIVE EXC DELUXE SUPER					
	601	00114-32010	BOLT	2	50	SEDAN R DRIVE EXC DELUXE SUPER					
	701	00915-51510	WASHER PLAIN	2	50	SEDAN R DRIVE EXC DELUXE SUPER					
	801	68210-E0100	ASSY-PAD INST UPPER	1	1	SEDAN R DRIVE					
	901	00915-41210	WASHER-PLAIN	6	50	SEDAN R DRIVE					
	1001	00915-11010	WASHER-SPRING LOCK	6	50	SEDAN R DRIVE					
	1101	00911-14010	NUT	6	50	SEDAN R DRIVE					
	1201	00918-31010	NUT-SPRING TYPE A	2	50	SEDAN R DRIVE					
	1301	00531-01642	SCREW-TAPPING	2	50	SEDAN R DRIVE					
	1401	68240-E0101	ASSY-PAD INST CENTER NO 1	1	2	SEDAN R DRIVE					
	1501	68250-E0101	ASSY-PAD INST CENTER NO 2	1	1	SEDAN R DRIVE					
	1601	00511-01610	SCREW-TAPPING LOWER FIX	2	50	SEDAN R DRIVE					
	1701	00911-01610	NUT-TAPPING LOWER FIX	1	50	SEDAN R DRIVE					

NOTE:

© 1972 NISSAN MOTOR CO., LTD.

PRINTED IN JAPAN

DASH & INSTRUMENT TRIMMING (SEDAN R DRIVE)

S	KEY NO.	PART NO.	DESCRIPTION	Q'TY	UNIT PKG FOR DIST.	APPLIED MODEL	APPLIED DATE FROM	APPLIED DATE UP TO	ICA N	ICA F	SUPERSEDED
	1801	00915-41010	WASHER-PLAIN	2	50	SEDAN R DRIVE					
	1901	68295-89900	NUT-FLAT	2	1	SEDAN R DRIVE					
	2001	68270-E0100	ASSY-PAD INST LOWER RH	1	1	SEDAN R DRIVE					
	2101	00915-41210	WASHER-PLAIN	6	50	SEDAN R DRIVE					
	2201	00915-11010	WASHER-SPRING	6	50	SEDAN R DRIVE					
	2301	00911-14010	NUT	6	50	SEDAN R DRIVE					
	2401	68280-E0100	ASSY-PAD INST LOWER LH	1	1	SEDAN R DRIVE					
	2501	00915-40810	WASHER-PLAIN	3	50	SEDAN R DRIVE					
	2601	00915-10810	WASHER-SPRING LOCK	3	50	SEDAN R DRIVE					
	2701	00911-10810	NUT	3	50	SEDAN R DRIVE					
	2801	68880-89902	NUT-EXPANSION	2	10	SEDAN R DRIVE					
	2901	00915-41010	WASHER-PLAIN	2	50	SEDAN R DRIVE					
	3001	00511-01642	SCREW-P/H TAPPING	2	50	SEDAN R DRIVE					
	3101	68410-E1700	ASSY-FINISHER	1	2	SUPER CUSTOM R DRIVE					
	02	68410-E0301	ASSY-FINISHER	1	2	PERSUNAL STANDARD DIESEL R DRIVE					
	03	68410-E0600	ASSY-FINISHER	1	2	SUPER CUSTOM R DRIVE					
	3201	00911-14010	NUT	5	50	SEDAN R DRIVE					
	3301	00915-11010	WASHER-SPRING LOCK	5	50	SEDAN R DRIVE					
	3401	00915-41010	WASHER-PLAIN	5	50	SEDAN R DRIVE					
	3501	68460-E0302	MASK-CLOCK HOLE	1	5	SEDAN R DRIVE					
	3601	00915-11010	WASHER-SPRING LOCK	2	50	SEDAN R DRIVE					

NOTE:

© 1972 NISSAN MOTOR CO., LTD.

REVISED: DECEMBER, 1972
PRINTED IN JAPAN

DASH & INSTRUMENT TRIMMING (SEDAN R DRIVE)

S	KEY NO.	PART NO.	DESCRIPTION	QTY	UNIT PKG FOR DIST.	APPLIED MODEL	APPLIED DATE FROM	APPLIED DATE UP TO	ICA N	ICA F	SUPERSEDED
	3701	00911-14010	NUT	2	50	SEDAN R DRIVE					
	3801	68470-E0301	ASSY-MASK RADIO APERTURE	1	2	SEDAN R DRIVE					
	3901	00915-51410	WASHER-PLAIN 1/4	2	50	SEDAN R DRIVE					
	4001	00915-11010	WASHER-SPRING	2	50	SEDAN R DRIVE					
	4101	00911-14010	NUT	2	50	SEDAN R DRIVE					
	4201	00521-01642	SCREW TAPPING	2	50	PERSONAL STD DIESEL R DRIVE					
	4301	68880-89902	NUT-EXPANSION	2	10	PERSONAL STD DIESEL R DRIVE					
	4401	68490-E0100	MASK-SWITCH HOLE	1	2	SEDAN EXC DIESEL					
	4501	68877-73000	PUSH-ON FIX 3/8	1	10	SEDAN EXC DIESEL					
	4601	68310-E0100	GARNISH-INSTRUMENT	1	1	SEDAN R DRIVE					
	4701	00510-61642	SCREW-TAPPING TYPE 1	4	50	SEDAN R DRIVE					
	4801	08964-10710	NUT-SPRING TYPE B	4	50	SEDAN R DRIVE					
	4901	68510-E0100	ASSY-LID GLOVE BOX	1	1	SEDAN R DRIVE					
	5001	68515-E0100	STOPPER-LID GLOVE BOX	1	5	SEDAN R DRIVE					
	5101	00314-00642	SCREW-MACHINE	2	50	SEDAN R DRIVE					
	5201	00915-11042	WASHER-SPRING LOCK	2	50	SEDAN R DRIVE					
	5301	68530-E0100	BOX-GLOVE	1	1	SEDAN R DRIVE					
	5401	68530-E0101	BOX-GLOVE	1	1	SEDAN R DRIVE					
	5501	00514-01310	SCREW-TAPPING	6	50	SEDAN R DRIVE					
	5601	00514-01310	SCREW-TAPPING	1	50	SEDAN R DRIVE					
	5701	00514-01310	SCREW TAPPING	2	50	SEDAN R DRIVE					
	5801	08964-10510	NUT-SPRING	2	50	SEDAN R DRIVE					

NOTE:

© 1972 NISSAN MOTOR CO., LTD.

PRINTED IN JAPAN

DASH & INSTRUMENT TRIMMING (SEDAN R DRIVE)

S	KEY NO.	PART NO.	DESCRIPTION	Q'TY	UNIT PKG FOR DIST.	APPLIED MODEL	APPLIED DATE FROM	APPLIED DATE UP TO	ICA N	ICA F	SUPERSEDED
	5901	68560-E0100	BUMPER-LID	2	10	SEDAN R DRIVE					
	6001	68570-E0100	GROMMET-LID STOPPER	1	10	SEDAN R DRIVE					
	6101	68630-E0100	LOCK-GLOVE BOX LID	1	1	SEDAN R DRIVE					
	6201	68640-E0100	STRIKER-GLOVE BOX LID LOCK	1	10	SEDAN R DRIVE					
*	6301	00511-01010	SCREW-TAPPING TYPE	2	50	SEDAN R DRIVE					
	02	00511-01012	SCREW-TAPPING TYPE	5	50	SEDAN R DRIVE			Y	N	00511-01010
	6401	68635-E0100	COVER-GLOVE BOX LOCK	1	5	SEDAN R DRIVE					
	6501	08320-30642	SCREW-MACHINE M3	2	50	SEDAN R DRIVE					

NOTE:

© 1972 NISSAN MOTOR CO., LTD.

REVISED: DECEMBER, 1972
PRINTED IN JAPAN

NOTE

Printed in Japan

NISSAN MOTOR CO., LTD.

DASH & INSTRUMENT TRIMMING (SEDAN L DRIVE)

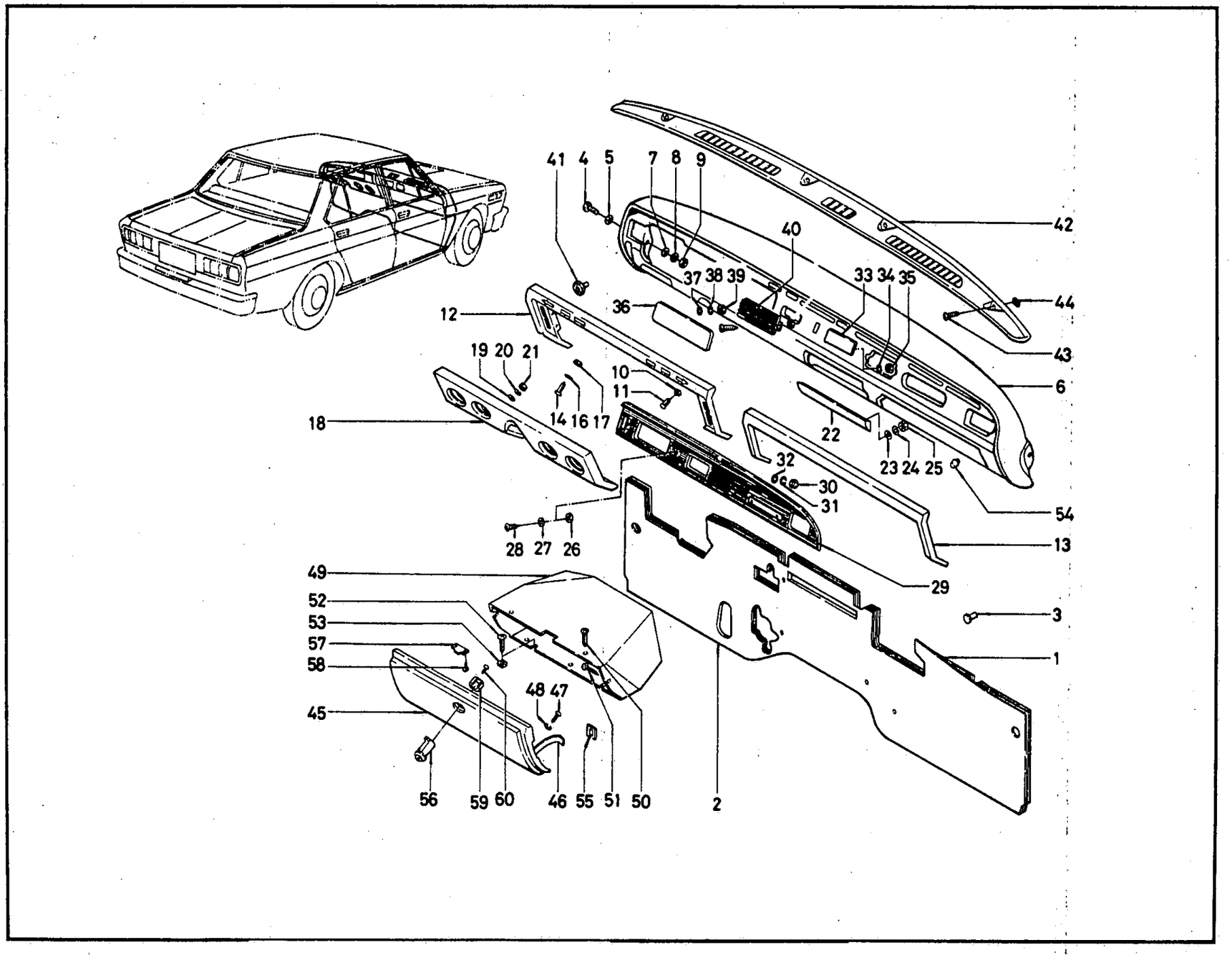

© 1972 NISSAN MOTOR CO., LTD.

REVISED: DECEMBER, 1972

PRINTED IN JAPAN

DASH & INSTRUMENT TRIMMING (SEDAN L DRIVE)

S	KEY NO.	PART NO.	DESCRIPTION	QTY	UNIT PKG FOR DIST.	APPLIED MODEL	APPLIED DATE FROM	APPLIED DATE UP TO	ICA N	ICA F	SUPERSEDED
	101	67900-E1200	ASSY-INSULATOR DASH RH	1	1	SEDAN L DRIVE					
	02	67900-E1201	ASSY-INSULATOR DASH RH	1	1	OP L DRIVE					
	201	67901-E1200	ASSY-INSULATOR DASH LH	1	1	SEDAN L DRIVE					
	301	67930-73000	FASTENER-TRIM	5	10	SEDAN L DRIVE					
	401	00114-52010	BOLT	2	50	SEDAN L DRIVE					
	501	00915-51510	WASHER-PLAIN	2	50	SEDAN L DRIVE					
	601	68210-E0100	ASSY-PAD INST UPPER	1	1	SEDAN L DRIVE					
	701	00915-41210	WASHER-PLAIN	6	50	SEDAN L DRIVE					
	801	00915-11010	WASHER-SPRING LOCK	6	50	SEDAN L DRIVE					
	901	00911-14010	NUT	6	50	SEDAN L DRIVE					
	1001	00918-31010	NUT-SPRING TYPE A	2	50	SEDAN L DRIVE					
	1101	00531-01642	SCREW-TAPPING	2	50	SEDAN L DRIVE					
	1201	68240-E1201	ASSY-PAD INST CENTER NO 1	1	2	SEDAN L DRIVE					
	1301	68250-E1201	ASSY-PAD INST CENTER NO 2	1	1	SEDAN L DRIVE					
	1401	00511-01610	SCREW-TAPPING LOWER FIX	2	50	SEDAN L DRIVE					
	1501	00911-01610	NUT-TAPPING LOWER FIX	2		SEDAN L DRIVE					
	1601	00915-41010	WASHER-PLAIN	2	50	SEDAN L DRIVE					
	1701	68295-89900	NUT-FLAT	2	1	SEDAN L DRIVE					
	1801	68270-E1200	ASSY-PAD INST LOWER LH	1	1	SEDAN L DRIVE					
	1901	00915-41210	WASHER-PLAIN	1	50	SEDAN L DRIVE					
	2001	00915-11010	WASHER-SPRING LOCK	6	50	SEDAN L DRIVE					
	2101	00911-14010	NUT	6	50	SEDAN L DRIVE					
	2201	68280-E1200	ASSY-PAD INST LOWER RH	1	1	SEDAN L DRIVE					

NOTE:

© 1972 NISSAN MOTOR CO., LTD.

PRINTED IN JAPAN

DASH & INSTRUMENT TRIMMING (SEDAN L DRIVE)

S	KEY NO.	PART NO.	DESCRIPTION	QTY	UNIT PKG FOR DIST.	APPLIED MODEL	APPLIED DATE FROM	APPLIED DATE UP TO	ICA N	ICA F	SUPERSEDED
	2301	- 00915-40810	WASHER-PLAIN	3	50	SEDAN L DRIVE					
	2401	- 00915-10810	WASHER-SPRING LOCK	3	50	SEDAN L DRIVE					
	2501	- 00911-10810	NUT	3	50	SEDAN L DRIVE					
	2601	- 68880-89902	NUT-EXPANSION	2	10	SEDAN L DRIVE					
	2701	- 00915-41010	WASHER-PLAIN	2	50	SEDAN L DRIVE					
	2801	- 00511-01642	SCREW-TAPPING	2	50	SEDAN L DRIVE					
	2901	- 68410-E1800	ASSY-FINISHER	2	2	SEDAN CUSTOM L DRIVE					
	02	- 68410-E1301	ASSY-FINISHER	1	2	SEDAN L DRIVE EXC DX SUPER CUSTOM					
	03	- 68410-E1801	ASSY-FINISHER	1	2	SUPER CUSTOM L DRIVE					
	04	- 68410-E1302	ASSY-FINISHER	1	2	SEDAN L DRIVE EXC DX SUPER CUSTOM					
	3001	- 00911-14010	NUT	5	50	SEDAN L DRIVE					
	3101	- 00915-11010	WASHER-SPRING LOCK	1	50	SEDAN L DRIVE					
	3201	- 00915-41010	WASHER-PLAIN	5	50	SEDAN L DRIVE					
	3301	- 68460-E0302	MASK-CLOCK HOLE	1	5	SEDAN L DRIVE					
	3401	- 00915-11010	WASHER-SPRING LOCK	2	50	SEDAN L DRIVE					
	3501	- 00911-14010	NUT	2	50	SEDAN L DRIVE					
	3601	- 68470-E0301	ASSY-MASK RADIO APERTURE	1	2	SEDAN L DRIVE					
	3701	- 00915-51410	WASHER-PLAIN 1/4	2	50	SEDAN L DRIVE					
	3801	- 00915-11010	WASHER-SPRING	2	50	SEDAN L DRIVE					
	3901	- 00911-14010	NUT	2	50	SEDAN L DRIVE					
	4001	- 68490-E0100	MASK-SWITCH HOLE	1	2	SEDAN L DRIVE EXC DIESEL					

NOTE:

© 1972 NISSAN MOTOR CO., LTD.

REVISED: DECEMBER, 1972
PRINTED IN JAPAN

DASH & INSTRUMENT TRIMMING (SEDAN L DRIVE)

S	KEY NO.	PART NO.	DESCRIPTION	QTY	UNIT PKG FOR DIST.	APPLIED MODEL	APPLIED DATE FROM	APPLIED DATE UP TO	ICA N	ICA F	SUPERSEDED
	4101	68877-73000	PUSH-ON FIX 3/8	1	10	SEDAN L DRIVE EXC DISEL					
	4201	68310-E0100	GARNISH-INSTRUMENT	1	1	SEDAN L DRIVE					
	4301	00510-61642	SCREW-TYPE 1	4		SEDAN L DRIVE					
	4401	08964-10710	NUT-SPRING TYPE B	4	50	SEDAN L DRIVE					
	4501	68510-E1200	ASSY-LID GLOVE BOX	1	1	SEDAN L DRIVE					
	4601	68515-E1200	STOPPER-LID GLOVE BOX	1	5	SEDAN L DRIVE					
	4701	00314-00642	SCREW-MACHINE	2	50	SEDAN L DRIVE					
	4801	00915-11042	WASHER-SPRING LOCK	2	50	SEDAN L DRIVE					
	4901	68530-E1200	BOX-GLOVE	1	1	SEDAN L DRIVE					
	02	68530-E1201	BOX-GLOVE	1		SEDAN L DRIVE					
	5001	00514-01310	SCREW-TAPPING	6	50	SEDAN L DRIVE					
	5101	00514-01310	SCREW-TAPPING	1	50	SEDAN L DRIVE					
	5201	00514-01310	SCREW-TAPPING	2	50	SEDAN L DRIVE					
	5301	08964-10510	NUT-SPRING	2	50	SEDAN L DRIVE					
	5401	68560-E0100	BUMPER-LTD	2	10	SEDAN L DRIVE					
	5501	68570-E0100	GROMMET-LTD STOPPER	1	10	SEDAN L DRIVE					
	5601	68630-E0100	LOCK-GLOVE BOX LID	1	1	SEDAN L DRIVE					
	5701	68640-E0100	STRIKER-GLOVE BOX LID LOCK	1	10	SEDAN L DRIVE					
	5801	00511-01012	SCREW-TAPPING	2	50	SEDAN L DRIVE					
	5901	00511-01012	COVER-GLOVE BOX	1	50	SEDAN L DRIVE					
	6001	08320-30642	SCREW-MACHINE M3	2	50	SEDAN L DRIVE					

NOTE:

© 1972 NISSAN MOTOR CO., LTD.

PRINTED IN JAPAN

NOTE

NOTE

Printed in Japan

NISSAN MOTOR CO., LTD.

WINDSHIELD GLASS, WEATHERSTRIP & MOULDING (SEDAN)

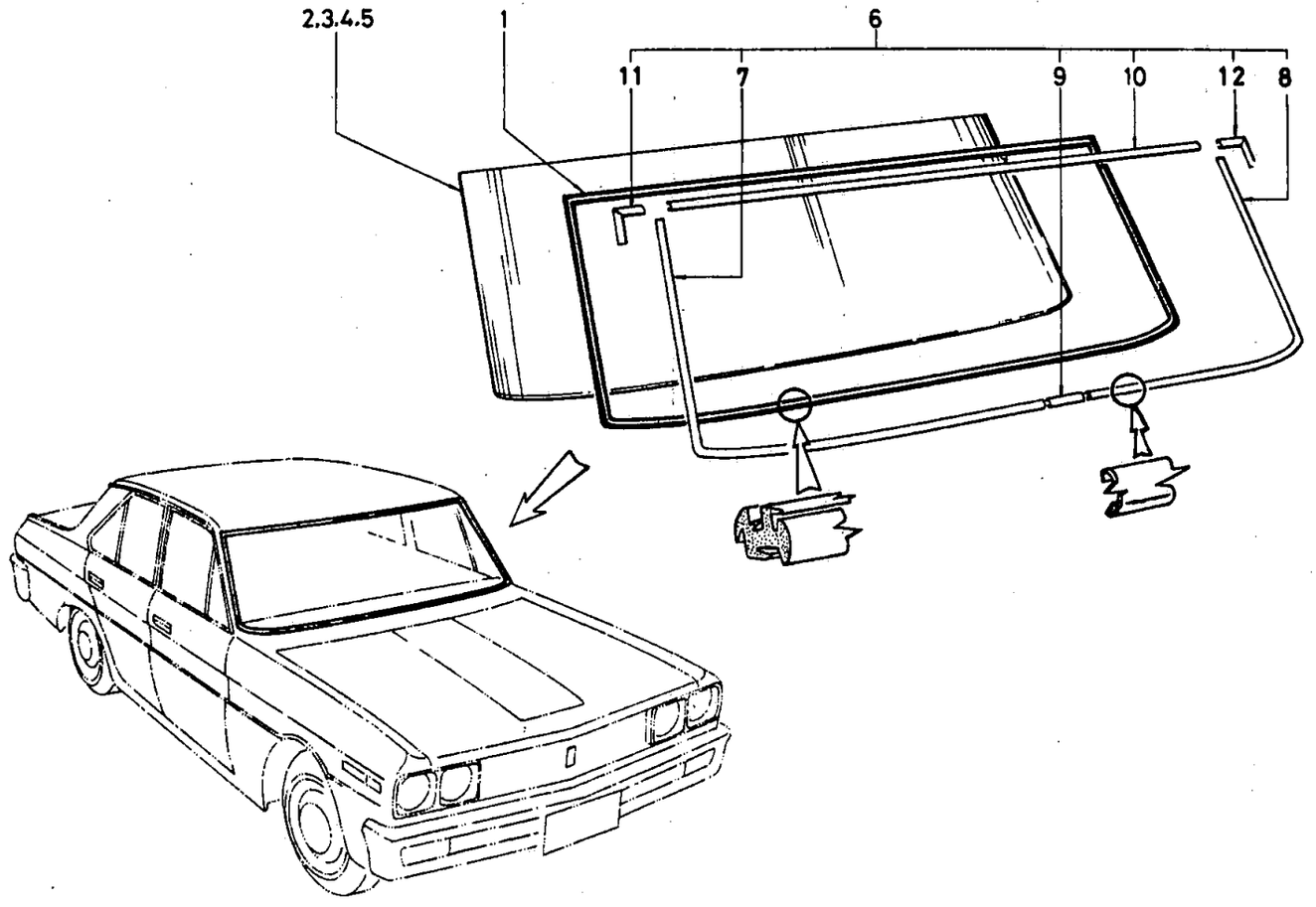

ILLUSTRATION **218**

© 1972 NISSAN MOTOR CO., LTD.

REVISED: DECEMBER, 1972

PRINTED IN JAPAN

WINDSHIELD GLASS, WEATHERSTRIP & MOULDING (SEDAN)

S	KEY NO.	PART NO.	DESCRIPTION	Q'TY	UNIT PKG FOR DIST.	APPLIED MODEL	APPLIED DATE FROM	APPLIED DATE UP TO	ICA N	ICA F	SUPERSEDED
	101	72610-E0100	WEATHERSTRIP-WINDSHIELD	1	1	SEDAN					
*	201	72613-E0100	GLASS-WINDSHIELD TINTED & TEMPERED 5.0T	1	1	SUPER DELUXE CUSTOM					
	02	72613-E0101	GLASS-WINDSHIELD TINTED & TEMPERED 5.0T	1	1	SUPER DELUXE CUSTOM			Y	N	72613-E0100
*	301	72613-E0700	GLASS-WINDSIELD TEMPERED 5.0T	1	1	SEDAN					
	02	72613-E0701	GLASS-WINDSIELD TEMPERED 5.0T	1	1	SEDAN			Y	N	72613-E0700
	401	72613-E1100	GLASS-WINDSHIELD TINTED & LAMINATED 5.0T	1	1	SUPER PERSONAL DELUXE CUSTOM					
	501	72613-E1300	GLASS-WINDSHIELD LAMINATED 5.0T	1	1	SEDAN					
	601	72810-E0100	SET-MOULDING WINDSHIELD	1	1	SEDAN					
	701	72811-E0100	MOULDING-WINDSHIELD RH	1	1	SEDAN					
	801	72812-E0100	MOULDING-WINDSHIELD LH	1	1	SEDAN					
	901	72813-73000	CLIP-MOULDING WINDSHIELD	1	5	SEDAN					
	1001	72814-E0100	MOULDING-WINDSHIELD UPPER	1	1	SEDAN					
	1101	72816-E0100	MOULDING-WINDSHIELD CORNER RH	1	5	SEDAN					
	1201	72817-E0100	MOULDING-WINDSHIELD CORNER LH	1	5	SEDAN					

NOTE:

© 1972 NISSAN MOTOR CO., LTD.

PRINTED IN JAPAN

NOTE

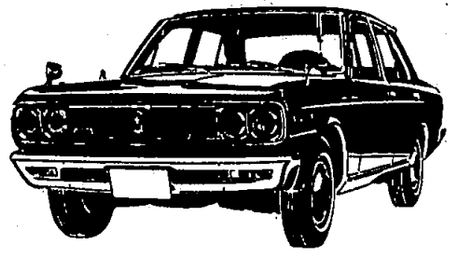

NISSAN MOTOR CO., LTD.

Printed in Japan

NOTE

Printed in Japan

NISSAN MOTOR CO., LTD.

ROOF PANEL & TRIMMING (SEDAN)

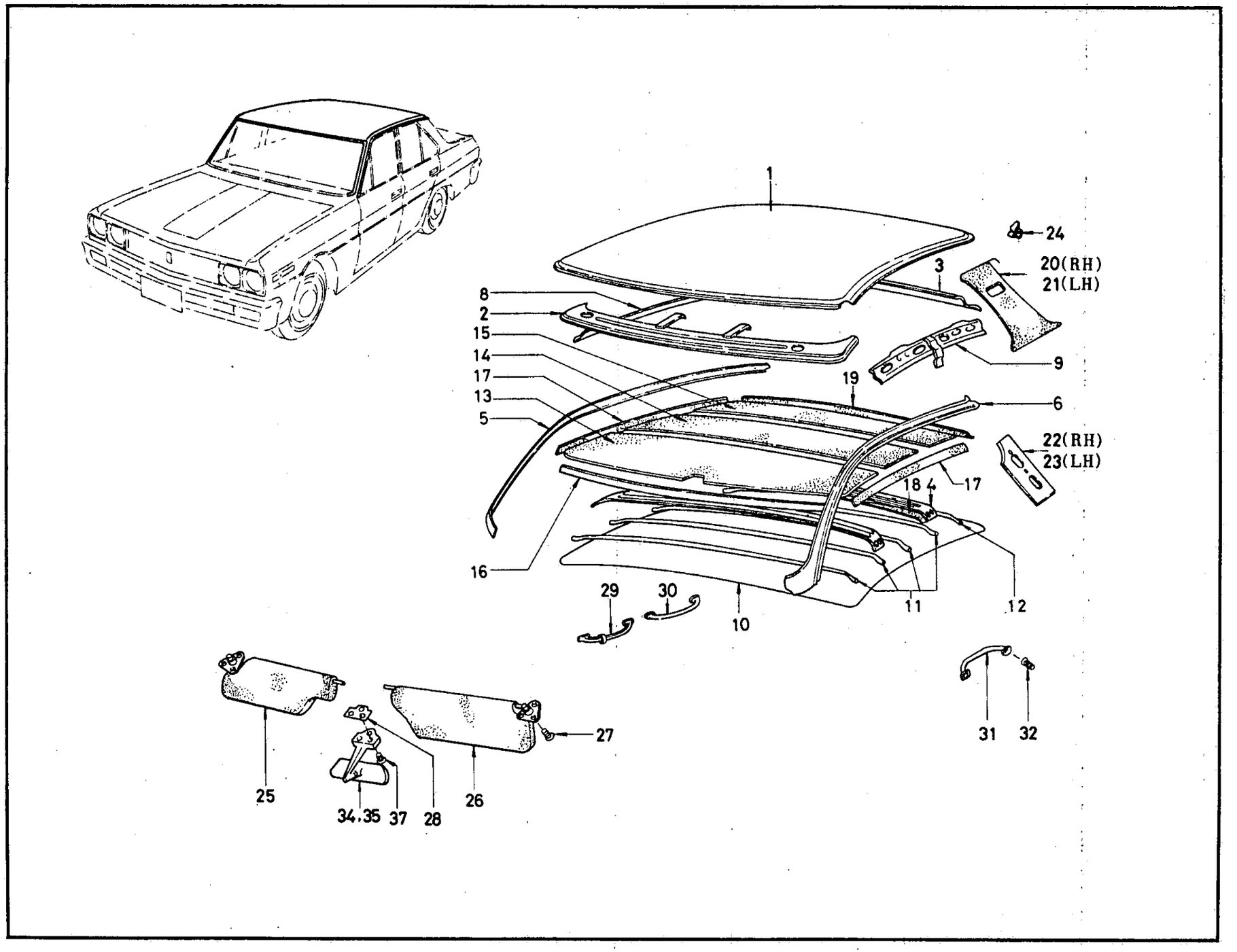

© 1972 NISSAN MOTOR CO., LTD.

REVISED: DECEMBER, 1972

PRINTED IN JAPAN

ROOF PANEL & TRIMMING (SEDAN)

S	KEY NO.	PART NO.	DESCRIPTION	Q'TY	UNIT PKG FOR DIST.	APPLIED MODEL	APPLIED DATE FROM	APPLIED DATE UP TO	ICA N	ICA F	SUPERSEDED
	1D1	73100-E0130	ASSY-PANEL ROOF	1	1	SEDAN					
	2D1	73210-E0100	ASSY-RAIL FRONT ROOF	1	1	SEDAN					
	3D1	73230-E0100	ASSY-RAIL REAR ROOF	1	1	SEDAN					
	4D1	73222-E0100	ASSY-BRACKET ROOM LAMP	1	1	SEDAN					
	5D1	73240-E0150	ASSY-SIDE ROOF RAIL RH	1	1	SEDAN					
	6D1	73241-E0150	ASSY-SIDE ROOF RAIL LH	1	1	SEDAN					
	7D1	73244-E0100	REINF-RAIL CENTER	2	1	SEDAN					
	8D1	73250-E0100	ASSY-SIDE ROOF RAIL INNER RH	1	1	SEDAN					
	9D1	73251-E0100	ASSY-SIDE ROOF RAIL INNER LH	1	1	SEDAN					
	10D1	73910-E0100	ASSY-CLOTH HEAD LINING	1	1	SEDAN					
	11D1	73921-E0100	WIRE-LISTING HEAD LINING #1	4	5	SEDAN					
	12D1	73922-E0100	WIRE-LISTING HEAD LINING #2	1	5	SEDAN					
*	13D1	73930-E0100	INSULATOR-ROOF FRONT	1	1	SEDAN					
	D2	73930-E0110	INSULATOR-ROOF FRONT	1	1	SEDAN			N	N	73930-E0100
	14D1	73931-E0100	INSULATOR-ROOF CENTER	1	1	SEDAN					
	D2	73931-E0110	INSULATOR-ROOF CENTER	1		SEDAN			N	N	73931-E0100
	15D1	73932-E0100	INSULATOR-ROOF REAR	1	1	SEDAN					
	D2	73932-E0110	INSULATOR-ROOF REAR	1	1	SEDAN			N	N	73932-E0100
	16D1	73936-E0100	PAD-ROOF FRONT	1	5	SEDAN					
	17D1	73937-E0100	PAD-ROOF SIDE	2	5	SEDAN					
	18D1	73938-73000	PAD-ROOM LAMP BRACKET	1	1	SEDAN					
	19D1	73939-E0101	PAD-ROOF REAR	1	5	SEDAN			Y	Y	73939-E0100
	20D1	73914-E0100	ASSY-GARNISH REAR CORNER RH	1	1	DELUXE SUPER CUSTOM					

NOTE:

C

PRINTED IN JAPAN

© 1972 NISSAN MOTOR CO., LTD.

ROOF PANEL & TRIMMING (SEDAN)

S	KEY NO.	PART NO.	DESCRIPTION	Q'TY	UNIT PKG FOR DIST.	APPLIED MODEL	APPLIED DATE FROM	APPLIED DATE UP TO	ICA N	ICA F	SUPERSEDED
	2002	73914-E0300	ASSY-GARNISH REAR CORNER RH	1	1	SEDAN EXC DX SUPE R CUSTOM					
	2101	73915-E0100	ASSY-GARNISH REAR CORNER LH	1	1	DX SUPER CUSTOM					
	02	73915-E0300	ASSY-GARNISH REAR CORNER LH	1	1	SEDAN EXC DX SUPER					
	2201	73948-E0100	CLOTH-REAR CORNER INNER RH	1	1	SEDAN					
	2301	73949-E0100	CLOTH-REAR CORNER INNER LH	1	1	SEDAN					
	2401	80919-32200	CLIP-DOOR FINISH	10	50	SEDAN					
	2501	96400-E0102	ASSY-SUN VISOR RH	1	1	SEDAN					
	2601	96401-E0102	ASSY-SUN VISOR LH	1	1	SEDAN					
	2701	00434-01620	SCREW #10-32X16	6	50	SEDAN					
	2801	96409-E0100	SPACER-BACK MIRROR REAR	1	1	SEDAN					
	2901	73940-E0101	ASSY-STRAP ASSIST FRONT ASSISTSEAT SIDE	1	1	SEDAN			Y	Y	73940-E0100
	3001	73941-E0100	ASSY-STRAP ASSIST REAR WITH COAT HANGER	1	1	STANDARD			Y	Y	73940-E0100
	3101	73941-E0101	ASSY-STRAP ASSIST REAR WITH COAT HANGER	2	1	SEDAN EXC STD					
	3201	00414-41610	SCREW-MACHINE	6	50	SEDAN					
	3301	96301-10800	ASSY-BACK MIRROR INSIDE	1	1	SEDAN					
*	3401	96321-E0200	ASSY-BACK MIRROR INSIDE	1	2	SUPER DX CUSTOM					
	02	96321-E3000	ASSY-BACK MIRROR INSIDE	1	2	SUPER DX CUSTOM			Y	N	96321-E0200
	03	96321-E0300	ASSY-BACK MIRROR INSIDE	1	1	STANDARD PERSONAL PERSONAL-DX					
*	3501	96322-E0101	ASSY-BACK MIRROR INSIDE	1		SUPER DELUXE					
*	02	96322-E3200	ASSY-BACK MIRROR INSIDE	1	1	SUPER DELUXE			Y	Y	96322-E0101

NOTE:

© 1972 NISSAN MOTOR CO., LTD.

REVISED: DECEMBER, 1972
PRINTED IN JAPAN

ROOF PANEL & TRIMMING (SEDAN)

S	KEY NO.	PART NO.	DESCRIPTION	Q'TY	UNIT PKG FOR DIST.	APPLIED MODEL	APPLIED DATE FROM	APPLIED DATE UP TO	ICA N	ICA F	SUPERSEDED
	3503	96322-E3202	ASSY-BACK MIRROR INSIDE	1	1	SUPER-DELUXE			Y	N	96322-E3200
	D4	96322-E0300	ASSY-BACK MIRROR INSIDE	1	1	STANDARD PERSONAL PERSONAL-DX					
	3601	96325-E0200	STAY-BACK MIRROR	1	1	SEDAN					
	3701	00434-01620	SCREW-MACHINE	3	50	SEDAN					

NOTE:

© 1972 NISSAN MOTOR CO., LTD.

PRINTED IN JAPAN

NOTE

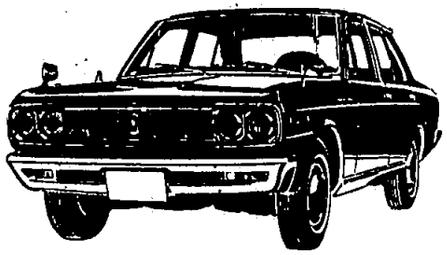

NISSAN MOTOR CO., LTD.

Printed in Japan

NOTE

Printed in Japan

NISSAN MOTOR CO., LTD.

FLOOR PANEL & FITTING (SEDAN)

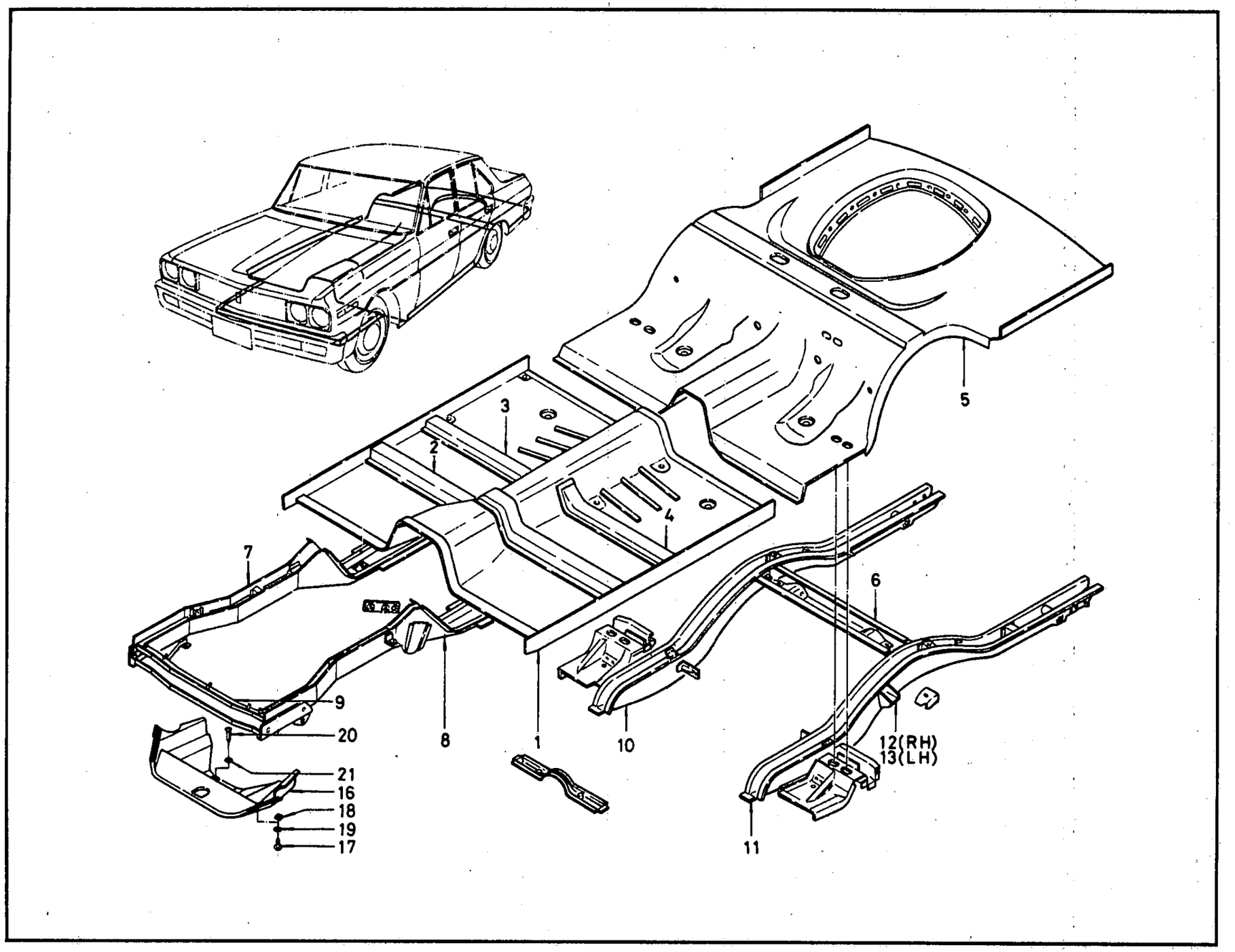

ILLUSTRATION **220**

© 1972 NISSAN MOTOR CO., LTD.

REVISED: DECEMBER, 1972

PRINTED IN JAPAN

FLOOR PANEL & FITTING (SEDAN)

S	KEY NO.	PART NO.	DESCRIPTION	Q'TY	UNIT PKG FOR DIST.	APPLIED MODEL	APPLIED DATE FROM	APPLIED DATE UP TO	ICA N	ICA F	SUPERSEDED
	101	74311-73030	PANEL-FRONT FLOOR	1	1	SEDAN					
	201	74330-73050	ASSY-2ND CROSS MEMBER	1	1	SEDAN					
	301	74340-73000	ASSY-FRONT SEAT MOUNTING MEMBER RH	1	1	SEDAN					
	401	74341-73000	ASSY-FRONT SEAT MOUNTING MEMBER LH	1	1	SEDAN					
	02	74341-73000	ASSY-FRONT SEAT MOUNTING MEMBER LH	1	1	SEDAN EXC STD					
	501	74510-E0130	ASSY-SUB FLOOR REAR	1	1	SEDAN					
	601	74530-E0100	ASSY-MEMBER REAR SHOCK ABSORBER	1	1	SEDAN					
	701	74801-E0130	ASSY-MEMBER SIDE FRONT RH	1	1	SEDAN			Y	Y	74801-E0131
	801	74802-E1130	ASSY-MEMBER SIDE FRONT	1	1	SEDAN					
	901	74840-E0100	ASSY-CROSS MEMBER FRONT	1	1	SEDAN					
	1001	74851-E0630	ASSY-MEMBER SIDE REAR RH	1	1	SEDAN					
	1101	74852-E0630	ASSY-MEMBER SIDE REAR LH	1	1	SEDAN					
	1201	74883-73000	ASSY-BRACKET REAR SPRING BUMPER RH	1	1	SEDAN					
	1301	74884-73000	ASSY-BRACKET REAR SPRING BUMPER LH	1	1	SEDAN					
	1401	00369-52014	SCREW-MACHINE WITH SPRING WASHER	3	50	SEDAN					
	1501	00915-41510	WASHER-PLAIN	3	50	SEDAN					
	1601	74891-E0100	BOARD-SPLASH SHIELD	1	1	SEDAN					
	1701	00511-01310	SCREW-TAPPING FIX BOARD SPLASH	4	50	SEDAN					
	1801	08963-20510	NUT-SPRING TYPE A FIX BOARD SPLASH	4	50	SEDAN					

NOTE:

© 1972 NISSAN MOTOR CO., LTD.

PRINTED IN JAPAN

FLOOR PANEL & FITTING (SEDAN)

S	KEY NO.	PART NO.	DESCRIPTION	Q'TY	UNIT PKG FOR DIST.	APPLIED MODEL	APPLIED DATE FROM	APPLIED DATE UP TO	ICA N	ICA F	SUPERSEDED
	1901	00915-41010	WASHER-PLAIN FIX BOARD SPLASH	4	50	SEDAN					
•	2001	00510-81310	SCREW-TAPPING #8	1	50	SEDAN AUTOMATIC					
	02	00510-81312	SCREW-TAPPING #8	1	50	SEDAN AUTOMATIC			Y	N	00510-81310
	2101	00915-40810	WASHER-PLAIN #8	1	50	SEDAN AUTOMATIC					

NOTE:

ILLUSTRATION **220**

© 1972 NISSAN MOTOR CO., LTD.

REVISED: DECEMBER, 1972

PRINTED IN JAPAN

C

NOTE

Printed in Japan

NISSAN MOTOR CO., LTD.

FLOOR CARPET (SEDAN R DRIVE)

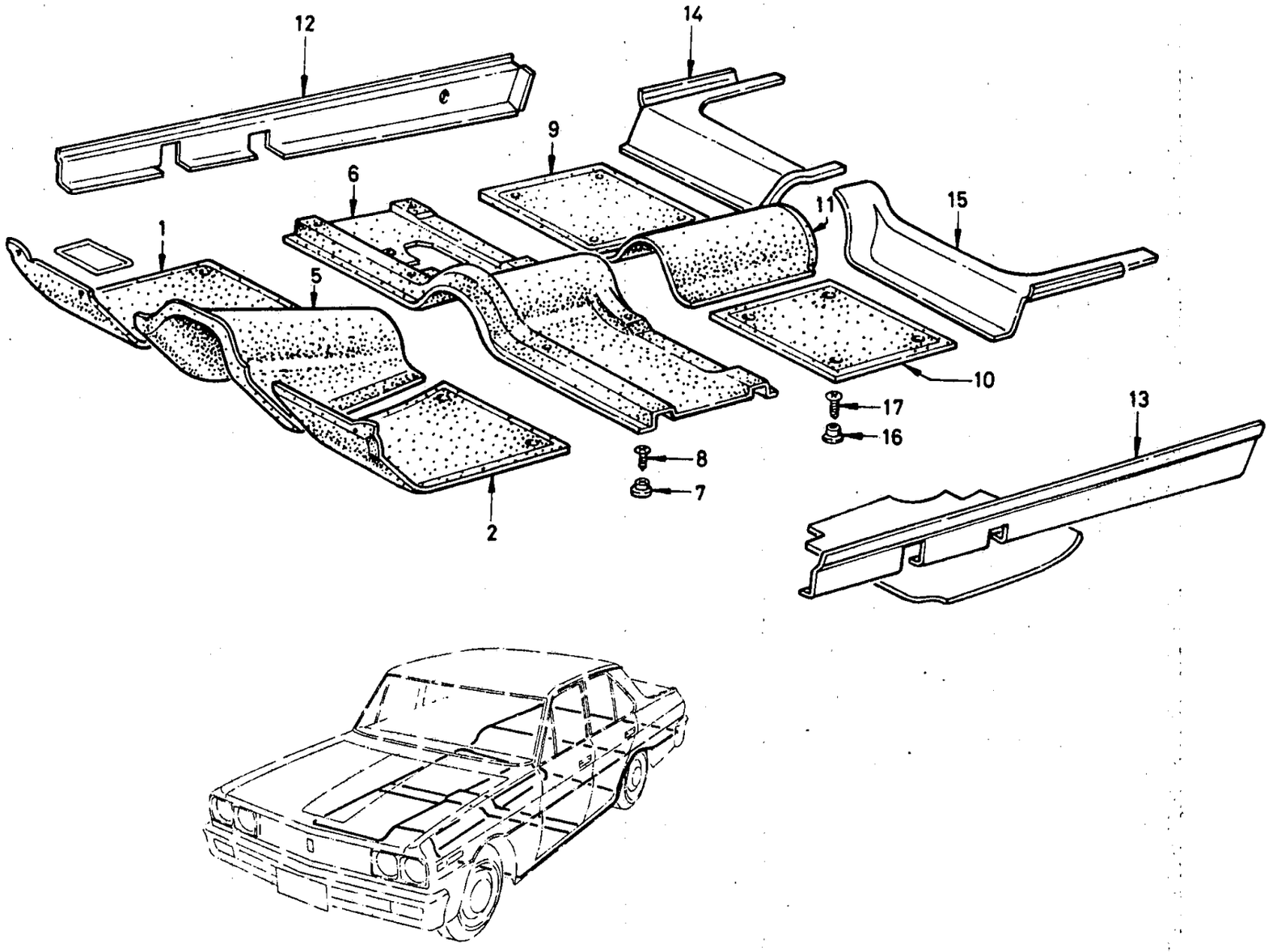

ILLUSTRATION **221-1**

© 1972 NISSAN MOTOR CO., LTD.

REVISED: DECEMBER, 1972

PRINTED IN JAPAN

FLOOR CARPET (SEDAN L DRIVE)

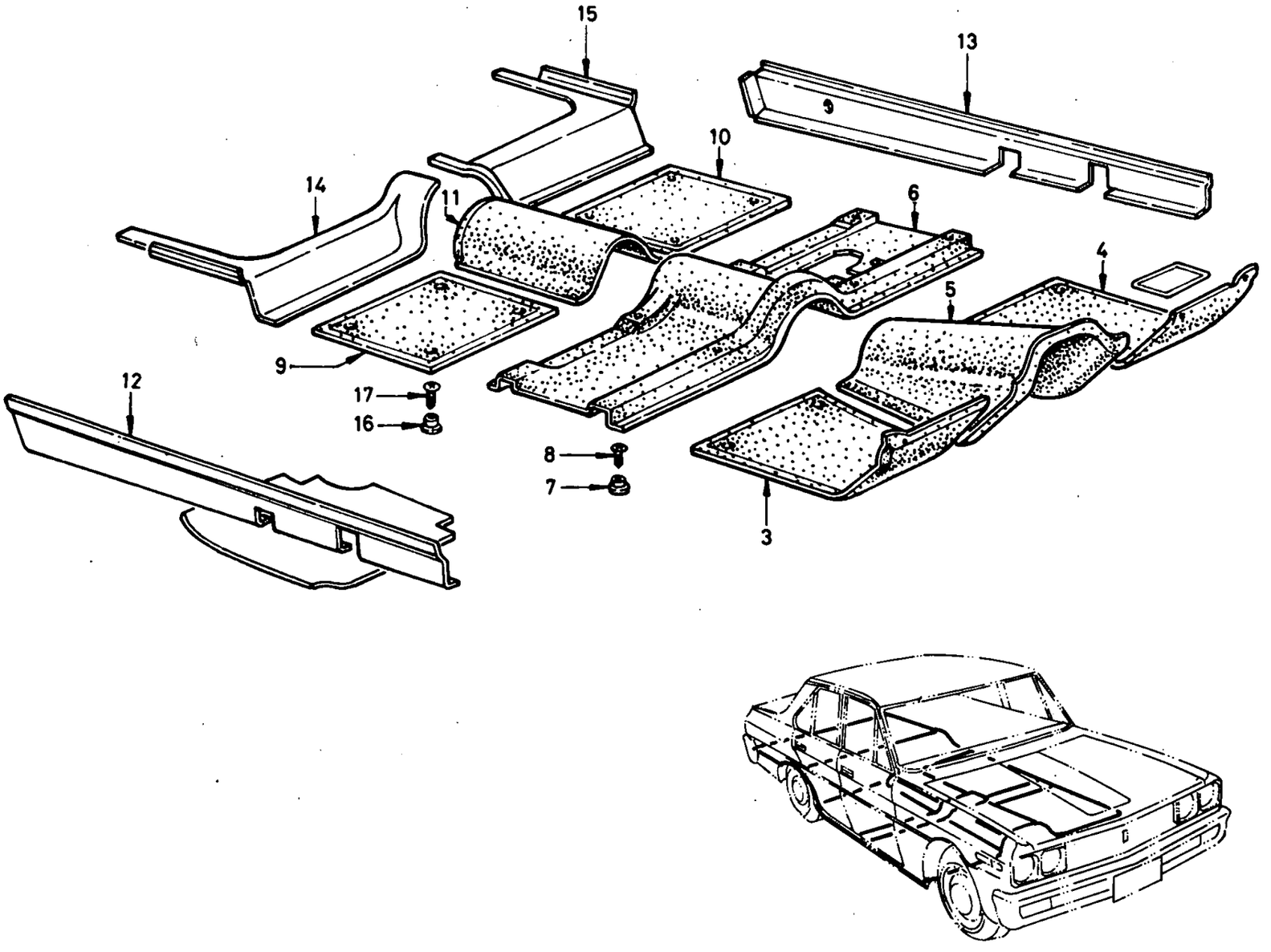

© 1972 NISSAN MOTOR CO., LTD.

PRINTED IN JAPAN

FLOOR CARPET (SEDAN)

S	KEY NO.	PART NO.	DESCRIPTION	QTY	UNIT PKG FOR DIST.	APPLIED MODEL	APPLIED DATE FROM	APPLIED DATE UP TO	ICA N	ICA F	SUPERSEDED
	101	74902-E0100	CARPET-FLOOR FRONT RED #1447 RH	1	1	SUPER DELUXE RD					
	02	74902-E0101	CARPET-FLOOR FRONT BROWN #1449 RH	1	1	SUPER DELUXE RD					
	03	74902-E0102	CARPET-FLOOR FRONT GRAY #1429 RH	1	1	DELUXE R DRIVE					
	04	74902-E0103	CARPET-FLOOR FRONT BLACK #1426 RH	1	1	SUPER DELUXE RD					
	05	74902-E0200	CARPET-FLOOR FRONT RED #1448 RH	1	1	DELUXE CUSTOM PERSONAL P-DX RD					
	06	74902-E0201	CARPET-FLOOR FRONT BROWN #1450 RH	1	1	SEDAN R DRIVE EXC SUPER					
	07	74902-E0202	CARPET-FLOOR FRONT GRAY #1435 RH	1	1	DX COSTOM P-DX PERSONAL R DRIVE					
	08	74902-E0203	CARPET-FLOOR FRONT BLACK #896 RH	1	1	SEDAN R DRIVE EXC SUPER					
	201	74903-E0100	CARPET-FLOOR FRONT RED #1447 LH	1	1	SUPER DELUXE RD					
	02	74903-E0101	CARPET-FLOOR FRONT BROWN #1449 LH	1	1	SUPER DELUXE RD					
	03	74903-E0102	CARPET-FLOOR FRONT GRAY #1429 LH	1	1	DELUXE R DRIVE					
	04	74903-E0103	CARPET-FLOOR FRONT BLACK #1426 LH	1	1	SUPER DELUXE RD					
	05	74903-E0200	CARPET-FLOOR FRONT RED #1448 LH	1	1	DX CUSTOM P-DX PERSONAL R DRIVE					
	06	74903-E0201	CARPET-FLOOR FRONT BROWN #1450 LH	1	1	SEDAN R DRIVE EXC SUPER					
	07	74903-E0202	CARPET-FLOOR FRONT GRAY #1435 LH	1	1	DX CUSTOM P-DX PERSONAL R DRIVE					

NOTE:

© 1972 NISSAN MOTOR CO., LTD.

REVISED: DECEMBER, 1972

PRINTED IN JAPAN

NISSAN

FLOOR CARPET (SEDAN)

S	KEY NO.	PART NO.	DESCRIPTION	QTY	UNIT PKG FOR DIST.	APPLIED MODEL	APPLIED DATE FROM	APPLIED DATE UP TO	ICA N	ICA F	SUPERSEDED
	208	74903-E0203	CARPET-FLOOR FRONT BLACK #896 LH	1	1	SEDAN R DRIVE EXC SUPER					
	301	74902-E1200	CARPET-FLOOR FRONT RED #1447 RH	1	1	SUPER DELUXE LD					
	02	74902-E1201	CARPET-FLOOR FRONT #1449 RH	1	1	SUPER DELUXE LD					
	03	74902-E1206	CARPET-FLOOR FRONT GRAY RH #1435	1	1	DELUXE L DRIVE					
	04	74902-E1203	CARPET-FLOOR FRONT BLACK #1426 RH	1	1	SUPER DELUXE LD					
	05	74902-E1204	CARPET-FLOOR FRONT RED #1448 RH	1	1	PERSONAL P-DELUXE L DRIVE					
	06	74902-E1205	CARPET-FLOOR FRONT BROWN #1450 RH	1	1	SEDAN L DRIVE EXC SUPER					
	07	74902-E1207	CARPET-FLOOR FRONT BLACK #896 RH	1		SEDAN L DRIVE EXC SUPER					
	401	74903-E1200	CARPET-FLOOR FRONT RED #1447 LH	1		SUPER DELUXE LD					
	02	74903-E1201	CARPET-FLOOR FRONT BRON #1449 LH	1	1	SUPER DELUXE LD					
	03	74903-E1206	CARPET-FLOOR FRONT GRAY LH #1435	1	1	DELUXE L DRIVE					
	04	74903-E1203	CARPET-FLOOR FRONT BLACK #1426 LH	1	1	SUPER DELUXE LD					
	05	74903-E1204	CARPET-FLOOR FRONT RED #1448 LH	1	1	PERSONAL CUSTON P-DX L DRIVE					
	06	74903-E1205	CARPET-FLOOR FRONT BROWN #1450 LH	1	1	SEDAN LDRIVE EXC SUPER					
	07	74903-E1206	CARPET-FLOOR FRONT GRAY #1435 LH	1	1	PERSONAL CUSTOM DX P-DX L DRIVE					
	08	74903-E1207	CARPET-FLOOR FRONT BLACK #896 LH	1		SEDAN L DRIVE EXC SUPER DELUXE					

NOTE:

© 1972 NISSAN MOTOR CO., LTD.

PRINTED IN JAPAN

FLOOR CARPET (SEDAN)

S	KEY NO.	PART NO.	DESCRIPTION	Q'TY	UNIT PKG FOR DIST.	APPLIED MODEL	APPLIED DATE FROM	APPLIED DATE UP TO	ICA N	ICA F	SUPERSEDED
	501	74904-E0200	CARPET-FLOOR FRONT CENTER RED #1448	1	1	DELUXE L DRIVE					
	02	74904-E0201	CARPET-FLOOR FRONT CENTER BROWN #1450	1	1	DELUXE L DRIVE					
	03	74904-E0203	CARPET-FLOOR FRONT CENTER BLACK #896	1	1	DELUXE L DRIVE					
	04	74904-E0104	CARPET-FLOOR FRONT CENTER RED #1447	1	1	SUPER					
	05	74904-E0105	CARPET-FLOOR FRONT CENTER BROWN #1449	1	1	SUPER DELUXE					
	06	74904-69002	CARPET-FLOOR FRONT CENTER BLACK #1426	1	1	SUPER					
	07	74904-69102	CARPET-FLOOR FRONT CENTER GRAY #1429	1		DELUXE R DRIVE					
	08	74904-E0202	CARPET-FLOOR FRONT CENTER GRAY #1435	1	1	DX(LD)					
	09	74904-E0200	CARPET-FLOOR FRONT CENTER RED #1448	1	1	PERSONAL CUSTOM DELUXE P-DELUXE					
	10	74904-E0201	CARPET-FLOOR FRONT CENTER BROWN #1450	1	1	SEDAN EXC SUPER					
	11	74904-E0202	CARPET-FLOOR FRONT CENTER GRAY #1435	1	1	DELUXE CUSTOM PERSONAL P-DELUXE					
	12	74904-E0203	CARPET-FLOOR FRONT CENTER BLACK #896	1	1	SEDAN EXC SUPER					
	601	74905-E0100	CARPET-FLOOR CENTER RED #1448	1	1	SEDAN EXC STANDARD DIESEL					
	02	74905-E0101	CARPET-FLOOR CENTER BROWN #1450	1	1	SEDAN					
	03	74905-E0102	CARPET-FLOOR CENTER GRAY #1435	1	1	DELUXE CUSTOM PERSONAL P-DELUXE					

NOTE:

© 1972 NISSAN MOTOR CO., LTD.

REVISED: DECEMBER, 1972

PRINTED IN JAPAN

FLOOR CARPET (SEDAN)

S	KEY NO.	PART NO.	DESCRIPTION	QTY	UNIT PKG FOR DIST.	APPLIED MODEL	APPLIED DATE FROM	APPLIED DATE UP TO	ICA N	ICA F	SUPERSEDED
	604	74905-E0103	CARPET-FLOOR CENTER BLACK #896	1	1	SEDAN EXC SUPER					
	701	74915-32200	FASTENER-DURABLE DOT FOR FLOOR CARPET	6	10	SEDAN					
	801	00520-62610	SCREW-TAPING	6	10	SEDAN					
	901	74906-E0101	CARPET-FLOOR REAR BROWN #1449 RH	1	1	SUPER DELUXE			Y	Y	74906-E0100
	02	74906-E0200	CARPET-FLOOR REAR RED #1448 RH	1	1	PERSONAL CUSTOM DELUXE P-DELUXE			Y	Y	74906-E0103
	03	74906-E0201	CARPET-FLOOR REAR BROWN #1450 RH	1	1	SEDAN EXC SUPER					
	04	74906-E0202	CARPET-FLOOR REAY GRAY #1435 RH	1	1	DELUXE CUSTOM PERSONAL P-DELUXE					
	05	74906-E0203	CARPET-FLOOR REAR BLACK #896 RH	1	1	SEDAN EXC SUPER					
	1001	74907-E0100	CARPET-FLOOR REAR RED #1447 LH	1	1	SUPER DELUXE					
	02	74907-E0101	CARPET-FLOOR REAR BROWN #1449 LH	1	1	SUPER DELUXE					
	03	74907-E0102	CARPET-FLOOR REAR GRAY #1429 LH	1	1	DELUXE CUSTOM PERSONAL P-DELUXE					
	04	74907-E0103	CARPET-FLOOR REAR BLACK #1426 LH	1	1	SUPER DELUXE					
	05	74907-E0200	CARPET-FLOOR REAR RED #1448 LH	1	1	PERSONAL CUSTOM DELUXE P-DX					
	06	74907-E0201	CARPET-FLOOR REAR BROWN #1450 LH	1	1	SEDAN EXC SUPER					
	07	74907-E0202	CARPET-FLOOR REAR GRAY #1450 LH	1	1	DELUXE CUSTOM PERSONAL P-DX					
	08	74907-E0203	CARPET-FLOOR REAR BLACK #896	1	1	SEDAN EXC SUPER					

NOTE:

© 1972 NISSAN MOTOR CO., LTD.

PRINTED IN JAPAN

FLOOR CARPET (SEDAN)

S	KEY NO.	PART NO.	DESCRIPTION	QTY	UNIT PKG FOR DIST.	APPLIED MODEL	APPLIED DATE FROM	APPLIED DATE UP TO	ICA N	ICA F	SUPERSEDED
	1101	74908-E0105	CARPET-FLOOR REAR BROWN #1449	1	1	SUPER					
	02	74908-E0200	CARPET-FLOOR REAR RED #1448	1	1	PERSONAL CUSTOM DELUXE P-DX					
	03	74908-E0201	CARPET-FLOOR REAR BROWN #1450	1	1	SEDAN EXC SUPER					
	04	74908-E0202	CARPET-FLOOR REAR GRAY #1435	1	1	DELUXE CUSTOM PERSONAL P-DX					
	05	74908-E0203	CARPET-FLOOR REAR BLACK #896	1	1	SEDAN EXC SUPER					
	1201	74910-E0112	CARPET-FLOOR SIDE SILL GRAY #1435 RH	1	1	DELUXE CUSTOM PERSONAL P-DX			Y	Y	74910-E0111
	1301	74911-E0112	CARPET-FLOOR SIDE SILL GRAY #1435 LH	1	1	DELUXE CUSTOM PERSONAL P-DX			Y	Y	74911-E0111
	1401	74912-E0110	CARPET-REAR SEAT LOWER RED #1448 RH	1	1	SEDAN EXC STD DIESEL			Y	Y	74911-E0113
	02	74912-E0111	CARPET-REAR SEAT LOWER BROWN #1450 RH	1	1	SEDAN					
	03	74912-E0112	CARPET-REAR SEAT LOWER GRAY #1435 RH	1	1	DELUXE CUSTOM PERSONAL P-DX					
	04	74912-E0113	CARPET-REAR SEAT LOWER BLACK #896 RH	1	1	SEDAN EXC SUPER					
	1501	74913-E0110	CARPET-REAR SEAT LOWER RED #1450 LH	1	1	SEDAN					
	02	74913-E0111	CARPET-REAR SEAT LOWER BROWN #1450 LH	1	1	PERSONAL CUSTOM DELUXE P-DX					
	03	74913-E0112	CARPET-REAR SEAT LOWER GRAY #1435 LH	1	1	DELUXE PERSONAL					
	04	74913-E0113	CARPET-REAR SEAT LOWER BLACK #89L	1	1	SEDAN EXC SUPER					
	1601	74915-32200	FASTENER-DURABLE DOT	8	10	SEDAN					

NOTE:

© 1972 NISSAN MOTOR CO., LTD.

REVISED: DECEMBER, 1972

PRINTED IN JAPAN

C

NISSAN

FLOOR CARPET (SEDAN)

S	KEY NO.	PART NO.	DESCRIPTION	Q'TY	UNIT PKG FOR DIST.	APPLIED MODEL	APPLIED DATE FROM	APPLIED DATE UP TO	ICA N	ICA F	SUPERSEDED
	1701	00520-62610	SCREW-TAING	8	10	SEDAN					

NOTE:

© 1972 NISSAN MOTOR CO., LTD.

PRINTED IN JAPAN

NOTE

NISSAN MOTOR CO., LTD.

Printed in Japan

NOTE

Printed in Japan

NISSAN MOTOR CO., LTD.

FLOOR TRIM, MAT, INSULATOR & REAR WHEEL HOUSE TRIM (SEDAN R DRIVE)

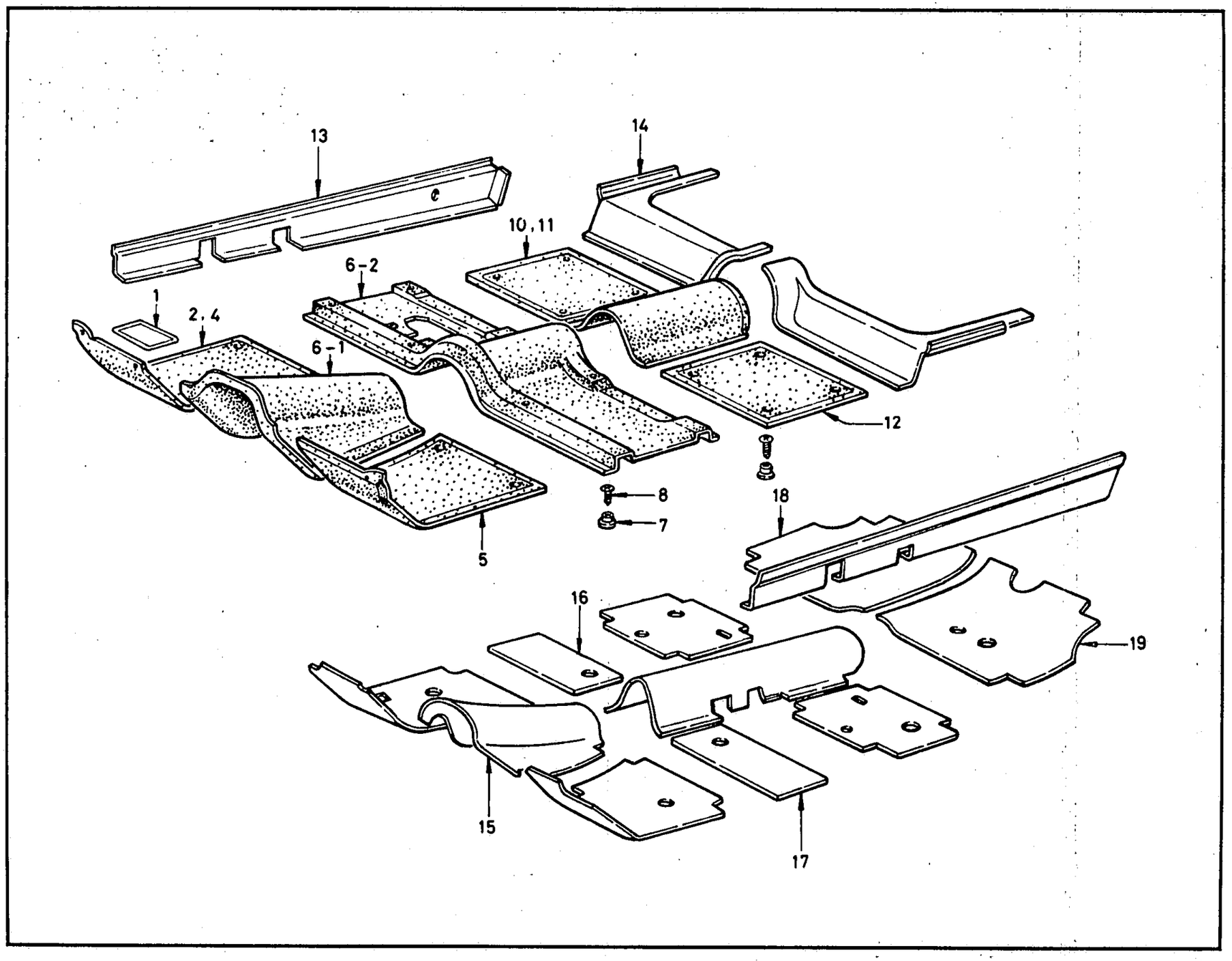

ILLUSTRATION **222-1**

© 1972 NISSAN MOTOR CO., LTD.

REVISED: DECEMBER, 1972

PRINTED IN JAPAN

FLOOR TRIM, MAT INSULATOR & REAR WHEEL HOUSE TRIM (SEDAN L DRIVE)

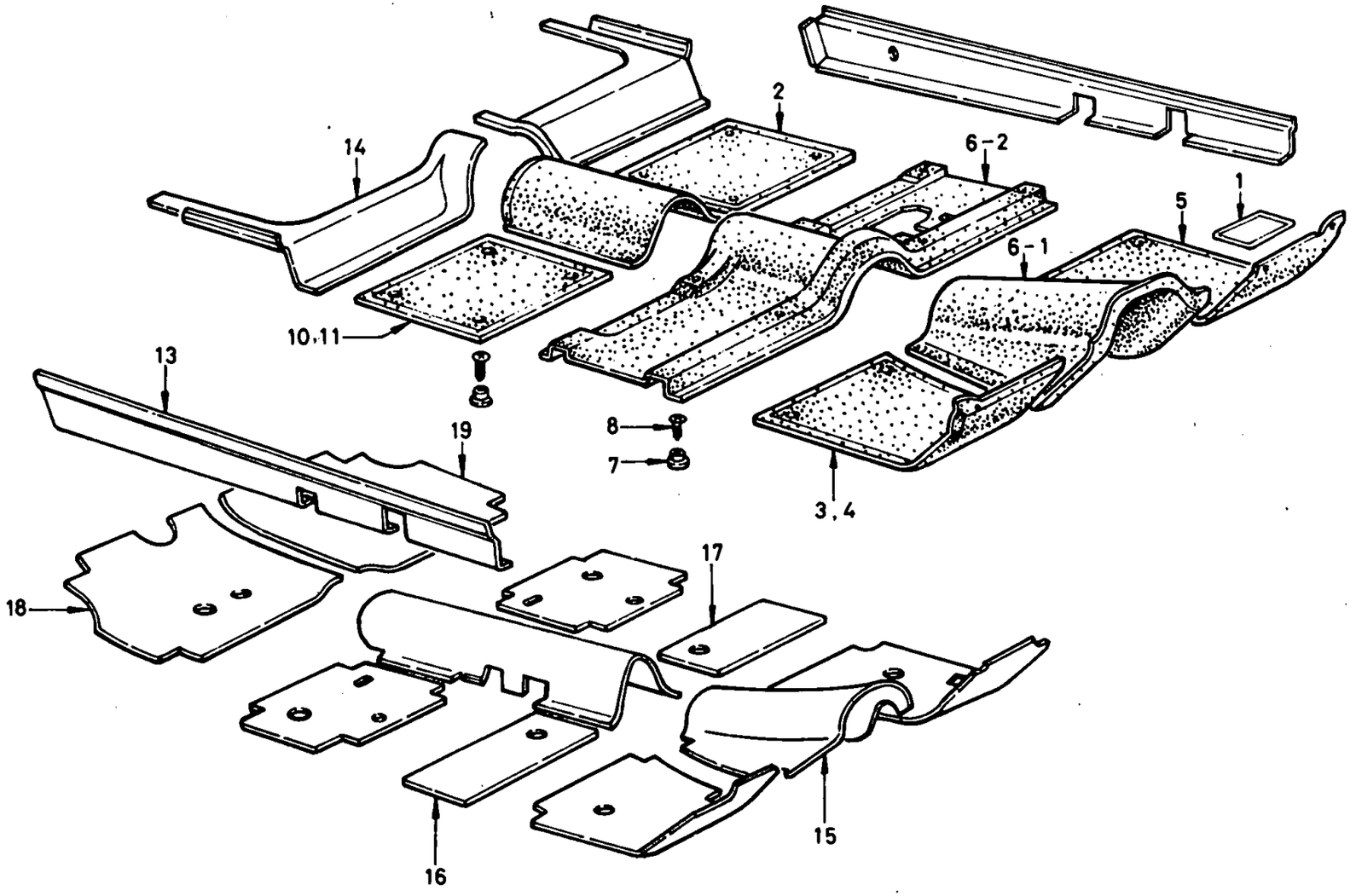

© 1972 NISSAN MOTOR CO., LTD.

PRINTED IN JAPAN

FLOOR TRIM, MAT INSULATOR & REAR WHEEL HOUSE TRIM (SEDAN)

S	KEY NO.	PART NO.	DESCRIPTION	QTY	UNIT PKG FOR DIST.	APPLIED MODEL	APPLIED DATE FROM	APPLIED DATE UP TO	ICA N	ICA F	SUPERSEDED
	101	74919-36701	MAT-FOOT PEDAL	1	1	SEDAN					
	201	74902-E0303	MAT-FLOOR FRONT RED #543	1	1	SEDAN RD					
	301	74902-E1303	MAT-FLOOR FRONT BLACK	1	1	SEDAN LD					
	401	74902-E0313	MAT-FLOOR FRONT BLACK #543 RH	1	1	SEDAN RD					
	02	74902-E1313	MAT-FLOOR FRONT BLACK #543 RH	1	1	SEDAN LD					
	501	74903-E0313	MAT-FLOOR FRONT BLACK #543 LH	1	1	SEDAN RD					
	02	74903-E1313	MAT-FLOOR FRONT BLACK #543 LH	1		SEDAN					
	601	74904-E0313	MAT-FLOOR CENTER BLACK #543	1	1	SEDAN LD					
	02	74905-E0303	MAT-FLOOR CENTER BLACK #543	1	1	SEDAN					
	701	74933-30000	FASTENER-DURABLE DOT FOR FLOOR MAT	2	10	SEDAN					
	801	00521-01642	SCREW-TAPPING	2		SEDAN					
	901	00520-62610	SCREW-TAPPING	4	10	SEDAN			Y	Y	74915-32200
	1001	74906-E0303	MAT-FLOOR REAR BLACK #543	1	1	SEDAN					
	1101	74906-E0313	MAT-FLOOR REAR BLACK	1	1	SEDAN					
	1201	74907-E0313	MAT-FLOOR REAR BLACK #543 LH	1	1	SEDAN					
	1301	74910-E0310	MAT-FLOOR SIDE SILL BLACK # 543 RH	1	1	SEDAN					
	1401	74912-E0310	MAT-FLOOR SIDE LOWER BLACK # 543 RH	1	1	SEDAN			Y	Y	74911-E0310
	1501	74932-78000	INSULATOR-FLOOR FRONT CENTER	1	1	SEDAN					
	1601	74933-73001	INSULATOR-FLOOR CENTER RH	1	1	SEDAN					

NOTE:

© 1972 NISSAN MOTOR CO., LTD.

REVISED: DECEMBER, 1972

PRINTED IN JAPAN

FLOOR TRIM, MAT INSULATOR & REAR WHEEL HOUSE TRIM (SEDAN)

S	KEY NO.	PART NO.	DESCRIPTION	Q'TY	UNIT PKG FOR DIST.	APPLIED MODEL	APPLIED DATE FROM	APPLIED DATE UP TO	ICA N	ICA F	SUPERSEDED
	1701	74931-73001	INSULATOR-FLOOR CENTER LH	1	1	SEDAN					
	1801	74938-73001	INSULATOR-REAR SEAT LOWER RH	1	1	SEDAN					
	1901	74939-73001	INSULATOR-REAR SEAT LOWER LH	1	1	SEDAN					
	2001	74986-36700	PLUG-RUBBER 25	6	10	SEDAN					
	2101	74365-73000	PLUG-ANCHORAGE HOLE	6	10	SEDAN					
	2201	74991-73000	PANEL-COVER HOLE 55	4	5	SEDAN					
	2301	74992-73000	PANEL-COVER HOLE 31	4	5	SEDAN					
	2401	00918-41000	SPRING-NUT TYPE B #1	8	50	SEDAN					
	2501	00511-01310	SCREW-TAPPING	8	50	SEDAN					
	2601	74986-36700	PLUG-RUBBER 25	2	10	SEDAN					
	2701	74942-09500	PLUG-RUBBER 21	1	10	SEDAN					
	2801	74993-73000	PLUG-TANK FLOOR SIDE	2	10	SEDAN					
	2901	67831-32200	PLUG-WATER PIPE ROOM HEATER	2	10	SEDAN					
	3001	66174-01500	PLUG-RUBBER 7	1	10	OP STD DIESEL RD					
	3101	74365-E0100	PLUG-ANCHORAGE HOLE INNER	2	10	SEDAN					
	3201	G4919-89901	SET-HEEL MAT FRONT & REAR	1	1	OP SEDAN					
	3301	G4919-89911	MAT-HEEL FRONT RH	1		OP SEDAN					
	3401	G4919-89921	MAT-HEEL FRONT RH	1		OP SEDAN					
	3501	G4919-89931	MAT-HEEL REAR	2		OP SEDAN					

NOTE:

© 1972 NISSAN MOTOR CO., LTD.

PRINTED IN JAPAN

NOTE

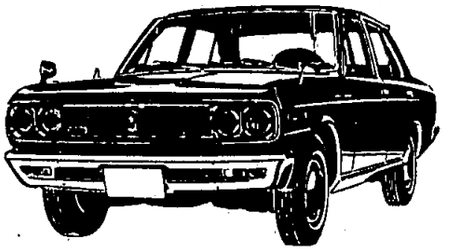

NISSAN MOTOR CO., LTD.

Printed in Japan

NOTE

Printed in Japan

NISSAN MOTOR CO., LTD.

BODY SIDE PANEL & SILL BODY (SEDAN)

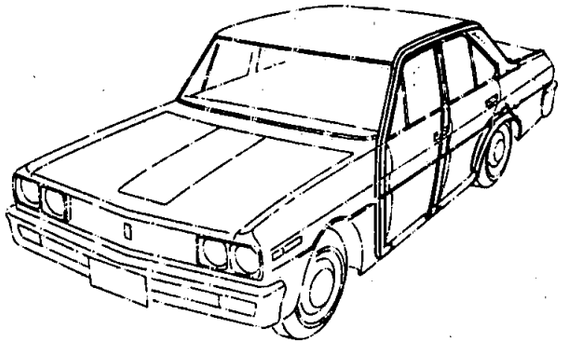

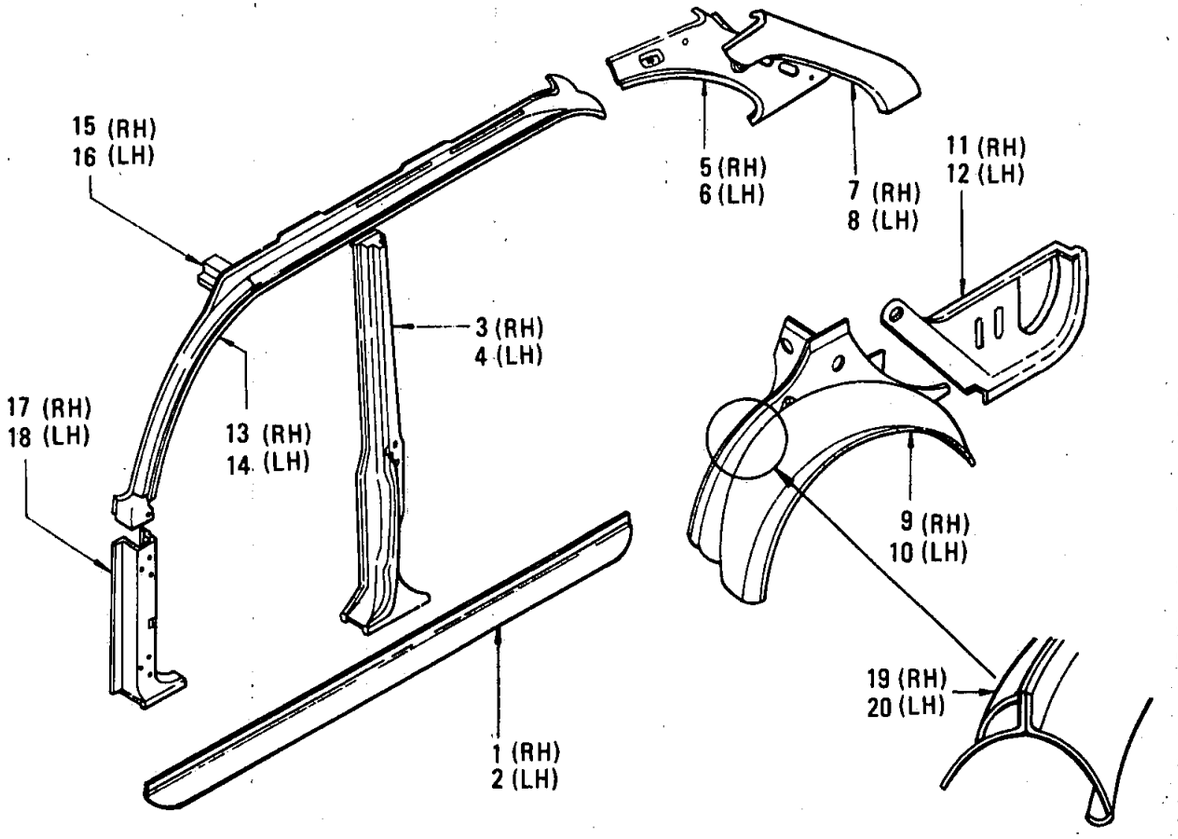

ILLUSTRATION **223**

© 1972 NISSAN MOTOR CO., LTD.

REVISED: DECEMBER, 1972

PRINTED IN JAPAN

BODY SIDE PANEL & SILL BODY (SEDAN)

S	KEY NO.	PART NO.	DESCRIPTION	QTY	UNIT PKG FOR DIST.	APPLIED MODEL	APPLIED DATE FROM	APPLIED DATE UP TO	ICA N	ICA F	SUPERSEDED
	101	- 76400-73030	ASSY-SILL OUTER RH	1	1	SEDAN			Y	Y	76400-E0100
	201	- 76401-73030	ASSY-SILL OUTER LH	1	1	SEDAN			Y	Y	76401-E0100
	301	- 76500-E0100	ASSY-PILLAR CENTER RH	1	1	SEDAN					
	401	- 76501-E0100	ASSY-PILLAR LH	1	1	SEDAN					
	501	- 76610-E0100	ASSY-PANEL REAR PILLAR INNER RH	1	1	SEDAN					
	601	- 76611-E0100	ASSY-PANEL REAR PILLAR INNER LH	1	1	SEDAN					
	701	- 76620-E0150	ASSY-PANEL REAR PILLAR UPPER RH	1	1	SEDAN					
	801	- 76621-E0150	ASSY-PANEL REAR PILLAR UPPER LH	1	1	SEDAN					
	901	- 76700-E0130	ASSY-REAR WHEEL HOUSE RH	1	1	SEDAN					
	1001	- 76701-E0130	ASSY-REAR WHEEL HOUSE LH	1	1	SEDAN					
	1101	- 76731-E0130	PANEL-TRUNK FLOOR SIDE RH	1	1	SEDAN					
	1201	- 76732-E0130	PANEL-TRUNK FLOOR SIDE LH	1	1	SEDAN					
	1301	- 72115-E0100	COVER-WINDOW SHIELD PILLAR RH	1	1	SEDAN					
	1401	- 72116-E0100	COVER-WINDOW SHIELD PILLAR LH	1	1	SEDAN					
	1501	- 72105-E0100	ASSY-WINDOW SHIELD PILLAR INNER RH	1	1	SEDAN					
	1601	- 72106-E0100	ASSY-WINDOW SHIELD PILLAR INNER LH	1	1	SEDAN					
	1701	- 66100-E0150	ASSY-PILLAR FRONT RH	1	1	SEDAN					
	1801	- 66101-E0150	ASSY-PILLAR FRONT LH	1	1	SEDAN					
	1901	- 76720-E0100	ASSY-REINF RR WHEEL HOUSE FR RH	1		SEDAN					

NOTE:

© 1972 NISSAN MOTOR CO., LTD.

PRINTED IN JAPAN

BODY SIDE PANEL & SILL BODY (SEDAN)

S	KEY NO.	PART NO.	DESCRIPTION	QTY	UNIT PKG FOR DIST.	APPLIED MODEL	APPLIED DATE FROM	APPLIED DATE UP TO	ICA N	ICA F	SUPERSEDED
	2001	76721-E0100	ASSY-REINF RR WHEEL HOUSE FR RH	1		SEDAN					

NOTE:

© 1972 NISSAN MOTOR CO., LTD.

REVISED: DECEMBER, 1972
PRINTED IN JAPAN

NOTE

Printed in Japan

NISSAN MOTOR CO., LTD.

BODY SIDE TRIMMING & SIDE WINDOW (SEDAN)

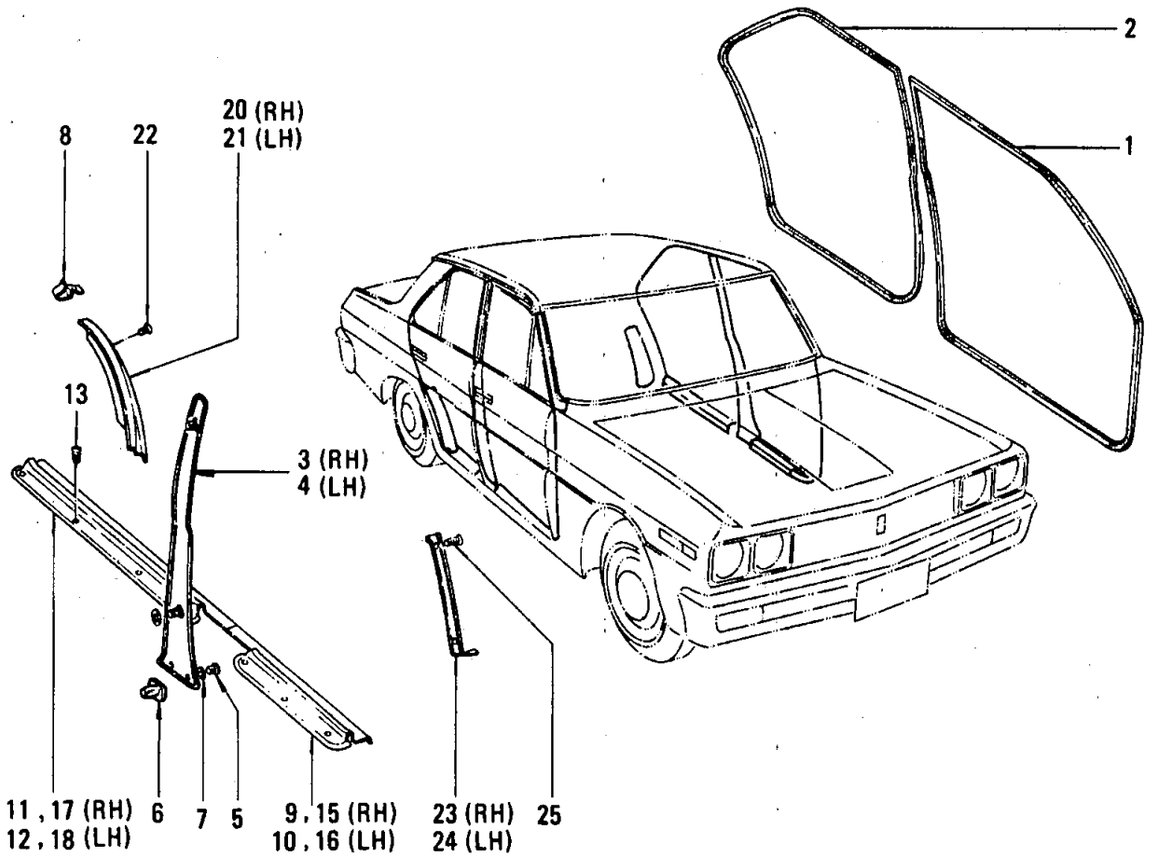

© 1972 NISSAN MOTOR CO., LTD.

REVISED: DECEMBER, 1972

PRINTED IN JAPAN

BODY SIDE TRIMMING & SIDE WINDOW (SEDAN)

S	KEY NO.	PART NO.	DESCRIPTION	Q'TY	UNIT PKG FOR DIST.	APPLIED MODEL	APPLIED DATE FROM	APPLIED DATE UP TO	ICA N	ICA F	SUPERSEDED
	101	76921-E0105	ASSY-WELT BODY SIDE FRONT #548 BLACK	2	1	SEDAN					
	02	76921-E0106	ASSY-WELT BODY SIDE FRONT #549 BROWN	2	1	SEDAN					
*	03	76921-E0107	ASSY-WELT BODY SIDE FRONT #550 GRAY	2	1	SEDAN					
	04	76921-E0108	ASSY-WELT BODY SIDE FRONT #551 BLUE	2	1	SEDAN					
	201	76922-E0105	ASSY-WELT BODY SIDE REAR #548 BLACK	2	1	SEDAN					
	02	76922-E0106	ASSY-WELT BODY SIDE REAR #549 BROWN	2	1	SEDAN					
*	03	76922-E0107	ASSY-WELT BODY SIDE REAR #550 GRAY	2	1	SEDAN					
*	04	76922-E0108	ASSY-WELT BODY SIDE REAR #551 BLUE	2	1	SEDAN					
	301	76913-E0101	ASSY-GARNISH CENTER PILLAR RH #1373 RED	1	1	SEDAN					
	02	76913-E0102	ASSY-GARNISH CENTER PILLAR RH #1374 BLACK	1	1	SEDAN					
	03	76913-E0103	ASSY-GARNISH CENTER PILLAR RH #1381 BROWN	1	1	SEDAN					
	04	76913-E0104	ASSY-GARNISH CENTER PILLAR RH #1375 GRAY	1	1	SEDAN					
	05	76913-E0105	ASSY-GARNISH CENTER PILLAR RH #1703 BLUE	1	1	SEDAN					
	401	76914-E0101	ASSY-GARNISH CENTER PILLAR LH #1373 RED	1	1	SEDAN					
	02	76914-E0102	ASSY-GARNISH CENTER PILLAR LH #1374 BLACK	1	1	SEDAN					

NOTE:

© 1972 NISSAN MOTOR CO., LTD.

PRINTED IN JAPAN

BODY SIDE TRIMMING & SIDE WINDOW (SEDAN)

S	KEY NO.	PART NO.	DESCRIPTION	Q'TY	UNIT PKG FOR DIST.	APPLIED MODEL	APPLIED DATE FROM	APPLIED DATE UP TO	ICA N	ICA F	SUPERSEDED
	403	76914-E0103	ASSY-GARNISH CENTER PILLAR LH #1381 BROWN	1	1	SEDAN					
	04	76914-E0104	ASSY-GARNISH CENTER PILLAR LH #1375 GRAY	1	1	SEDAN					
	05	76914-E0105	ASSY-GARNISH CENTER PILLAR LH #1703 BLUE	1	1	SEDAN					
	501	00530-61620	SCREW-TAPPING #6X16	6	50	SEDAN					
	601	96706-89900	GROMMET-SCREW #6	4	10	SEDAN					
	701	80999-89900	WASHE-FINISH #6	6	50	SEDAN					
	801	73918-10601	FASTENER-GARNISH MOULDING FIXING	2	50	SEDAN					
	901	76951-E0100	PLATE-KICKING FRONT RH	1	1	SEDAN					
	1001	76952-E0100	PLATE-KICKING FRONT LH	1	1	SEDAN					
	1101	76953-E0100	PLATE-KICKING REAR RH	1	1	SEDAN					
	1201	76954-E0100	PLATE-KICKING REAR LH	1	1	SEDAN					
	1301	76959-73001	SCREW-TAPPING T/H STAINLESS #8	24	10	SEDAN					
	1401	00543-81620	SCREW-TAPPING T/H #8BX16	2	50	SEDAN					
	1501	76951-E1100	PLATE-KICKING FRONT RH	1	1	SEDAN					
	1601	76952-E1100	PLATE-KICKING FRONT LH	1	1	SEDAN					
	1701	76953-E1100	PLATE-KICKING REAR RH	1	1	SEDAN					
	1801	76954-E1100	PLATE-KICKING REAR LH	1	1	SEDAN					
	1901	76958-E0100	SPACER-RUBBER KICKING PLATE	10	10	SEDAN					
	2001	76917-E0101	GARNISH-REAR WHEEL HOUSE RH	1	1	SEDAN					
	2101	76918-E0101	GARNISH-REAR WHEEL HOUSE LH	1	1	SEDAN					

NOTE:

© 1972 NISSAN MOTOR CO., LTD.

REVISED: DECEMBER, 1972
PRINTED IN JAPAN

BODY SIDE TRIMMING & SIDE WINDOW (SEDAN)

S	KEY NO.	PART NO.	DESCRIPTION	Q'TY	UNIT PKG FOR DIST.	APPLIED MODEL	APPLIED DATE FROM	APPLIED DATE UP TO	ICA N	ICA F	SUPERSEDED
	2201	00530-81342	SCREW-TAPPING O/H #6X13	4	50	SEDAN					
	2301	76911-E0100	GARNISH-PILLAR W/S RH #179 BLACK	1	1	SEDAN					
	2401	76912-E0100	GARNISH-PILLAR W/S LH #179 BLACK	1	1	SEDAN					
	2501	00530-61642	SCREW-TAPPING O/H	4	50	SEDAN					

NOTE:

© 1972 NISSAN MOTOR CO., LTD.

PRINTED IN JAPAN

NOTE

NISSAN MOTOR CO., LTD.

Printed in Japan

NOTE

Printed in Japan

NISSAN MOTOR CO., LTD.

BODY SIDE FITTING (SEDAN)

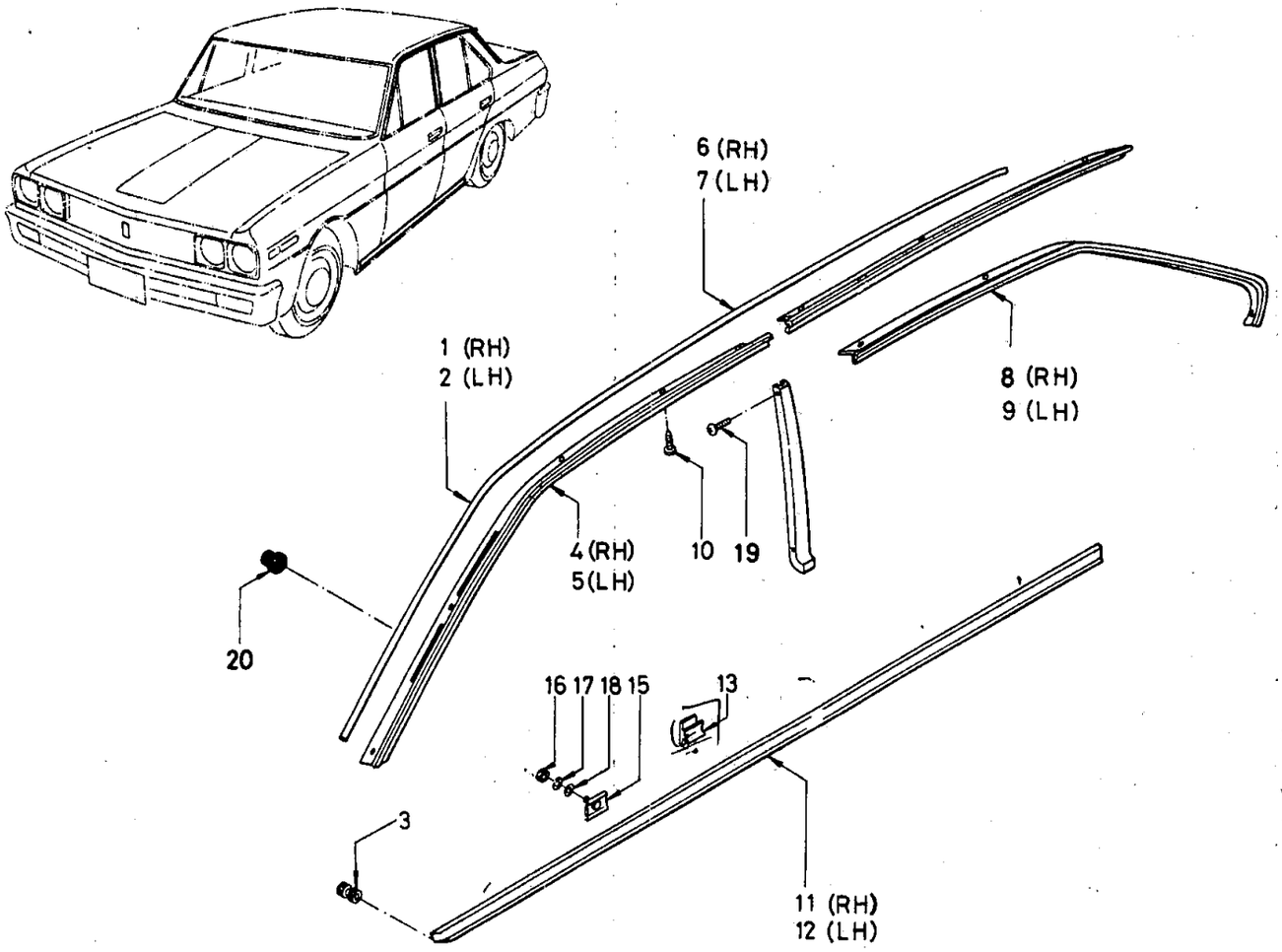

ILLUSTRATION **225**

© 1972 NISSAN MOTOR CO., LTD.

REVISED: DECEMBER, 1972

PRINTED IN JAPAN

BODY SIDE FITTING (SEDAN)

S	KEY NO.	PART NO.	DESCRIPTION	Q'TY	UNIT PKG FOR DIST.	APPLIED MODEL	APPLIED DATE FROM	APPLIED DATE UP TO	ICA N	ICA F	SUPERSEDED
	101	73800-E0100	MOULDING-ROOF DRIP RH	1	1	SEDAN					
	201	73801-E0100	MOULDING-ROOF DRIP LH	1	1	SEDAN					
*	301	76815-73000	GROMMET-RUBBER	2	10	SUPER CUSTOM					
	02	76815-P0100	GROMMET-RUBBER	2	1	SEDAN			Y	N	76815-73000
	401	76800-E0100	MOULDING-ROOF RAIL FRONT RH	1	1	SUPER CUSTOM					
	501	76801-E0100	MOULDING-ROOF RAIL FRONT LH	1	1	SUPER CUSTOM					
	601	76802-E0100	MOULDING-ROOF RAIL REAR RH	1	1	SUPER CUSTOM					
	701	76803-E0100	MOULDING-ROOF RAIL REAR LH	1	1	SUPER CUSTOM					
	801	76802-E0700	MOULDING-ROOF RAIL REAR RH	1	1	P-DX STD					
	901	76803-E0700	MOULDING-ROOF RAIL REAR LH	1	1	P-DX STD					
	1001	72832-32200	SCREW-TAPPING T/H #4BX7	22	50	SEDAN					
	1101	76482-73002	MOULDING-BODY SILL RH	1	1	SEDAN					
	1201	76483-73002	MOULDING-BODY SILL LH	1	1	SEDAN					
	1301	76488-73001	CLIP-MOULDING BODY SILL	8	10	SEDAN					
	1401	76489-73000	CLIP-SILL MOULDING	4	10	SEDAN					
	1501	76486-10603	RETAINER-BODY SILL	4	10	SEDAN					
	1601	00911-14410	NUT-HEX 1/4 28UNF	4	50	SEDAN					
	1701	00915-11410	WASHER-LOCK SPRING 1/4 #2	4	50	SEDAN					
	1801	00915-51410	WASHER-PLAIN 1/4	4	50	SEDAN					
	1901	72832-32200	SCREW-TAPPING T/H #4BX7	8	50	SUPPER CUSTOM					
	2001	76818-73100	PLUG-DOOR SWITCH HOLE	2	10	P-DX STD					

NOTE:

PRINTED IN JAPAN

REVISED: DECEMBER, 1972

© 1972 NISSAN MOTOR CO., LTD.

NOTE

NISSAN MOTOR CO., LTD.

Printed in Japan

NOTE

Printed in Japan

NISSAN MOTOR CO., LTD.

REAR FENDER, REAR PANEL & REAR PANEL FINISHER (SEDAN)

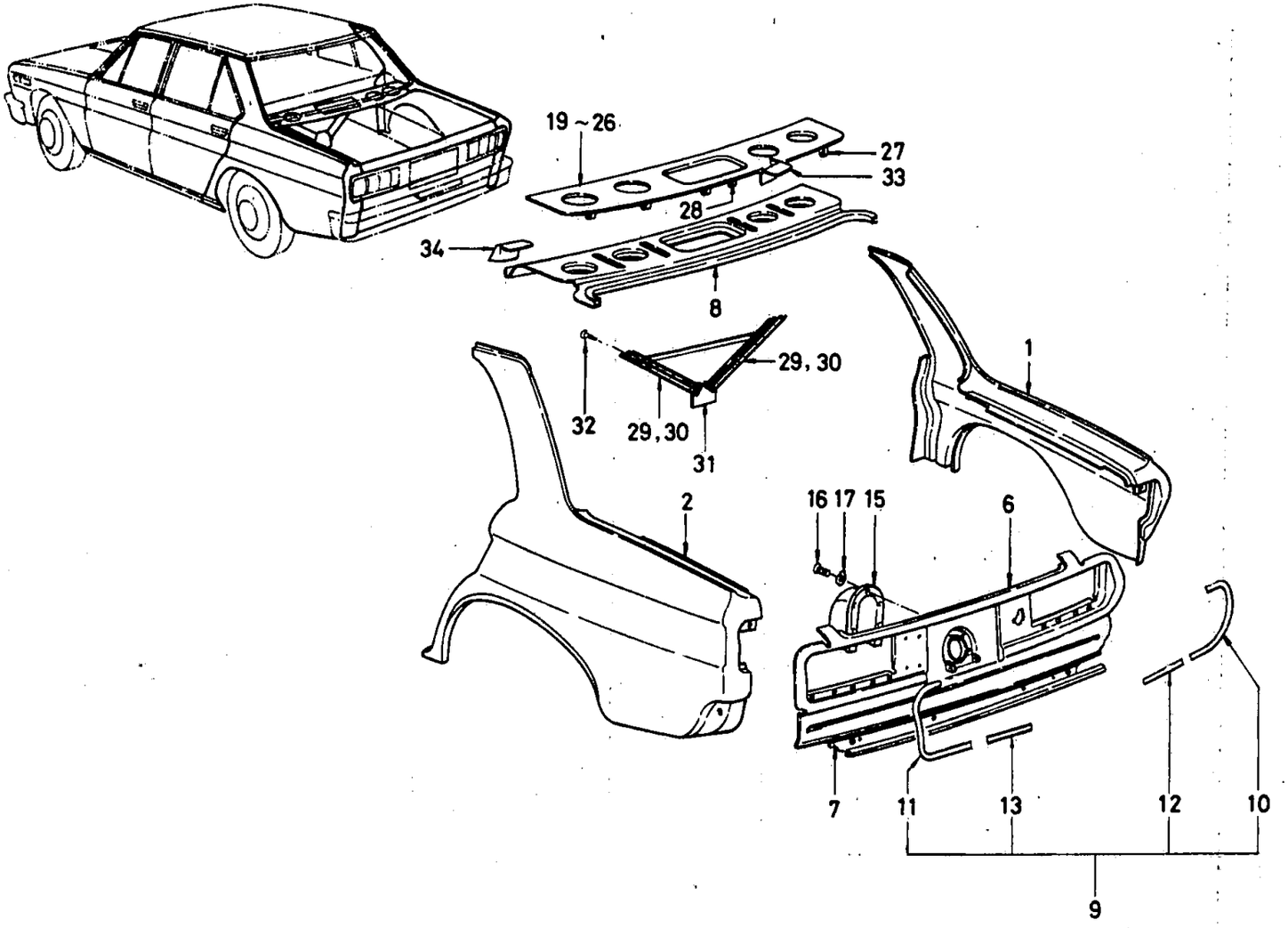

© 1972 NISSAN MOTOR CO., LTD.

REVISED: DECEMBER, 1972

PRINTED IN JAPAN

REAR FENDER, REAR PANEL & REAR PANEL FINISHER (SEDAN)

S	KEY NO.	PART NO.	DESCRIPTION	Q'TY	UNIT PKG FOR DIST.	APPLIED MODEL	APPLIED DATE FROM	APPLIED DATE UP TO	ICA N	ICA F	SUPERSEDED
	101	78100-E0130	ASSY-REAR FENDER RH	1	1	SEDAN					
	201	78101-E0130	ASSY-REAR FENDER LH	1	1	SEDAN					
	301	78125-E0100	ASSY-PANEL REAR PILLAR RH	1	1	SEDAN					
	401	78126-E0100	ASSY-PANEL REAR PILLAR LH	1	1	SEDAN					
	501	64821-32200	PLUG-LOCATE HOLE	2	50	SEDAN					
	601	79100-E0330	ASSY-PANEL REAR UPPER	1	1	SEDAN					
	701	79121-E0130	PANEL-REAR LOWER	1	1	SEDAN					
*	801	79400-E0130	ASSY-PANEL WAIST	1	1	SEDAN					
	901	79840-E0100	SET-MOULDING REAR PANEL	1	1	SEDAN					
	1001	79841-E0100	MOULDING-REAR PANEL SIDE RH	1	1	SEDAN					
	1101	79842-E0100	MOULDING-REAR PANEL SIDE LH	1	1	SEDAN					
	1201	79843-E0100	MOULDING-REAR PANEL LOWER RH	1	1	SEDAN					
	1301	79844-E0100	MOULDING-REAR PANEL LOWER LH	1	1	SEDAN					
	1401	79845-E0100	BOLT-MOULDING FIX	12	10	SEDAN					
	1501	79116-E0100	COVER-GAS FILLER NECK	1	1	SEDAN					
*	1601	00511-01010	SCREW-TAPPING TYPE A FIX COVER	5	50	SEDAN					
	02	00511-01012	SCREW-TAPPING TYPE A FIX COVER	5	50	SEDAN			Y	N	00511-01010
	1701	00915-41010	WASHER-PLAIN FIX COVER	5	50	SEDAN					
	1801	79821-E0101	SPLASH-SHIELD REAR PANEL	1	1	SEDAN					
	1901	79910-E0300	ASSY-FINISH REAR PILLAR SHELF RED #1704	1	1	SEDAN					
	2001	79910-E0301	ASSY-FINISH REAR PILLAR SHELF BLACK #1705	1	1	SEDAN					

NOTE:

© 1972 NISSAN MOTOR CO., LTD.

PRINTED IN JAPAN

REAR FENDER, REAR PANEL & REAR PANEL FINISHER (SEDAN)

S	KEY NO.	PART NO.	DESCRIPTION	Q'TY	UNIT PKG FOR DIST.	APPLIED MODEL	APPLIED DATE FROM	APPLIED DATE UP TO	ICA N	ICA F	SUPERSEDED
	2101	79910-E0302	ASSY-FINISH REAR PILLAR SHELF BROWN #1706	1	1	SEDAN					
	2201	79910-E0303	ASSY-FINISH REAR PILLAR SHELF GRAY #1707	1	1	SEDAN					
	2301	79910-E3100	ASSY-FINISH REAR PERCEL SHELF RED #1704	1	1	SEDAN					
	2401	79910-E3101	ASSY-FINISH REAR PERCEL SHELF BLACK #1705	1	1	SEDAN					
	2501	79910-E3102	ASSY-FINISH REAR PERCEL SHELF BROWN #1706	1	1	SEDAN					
	2601	79910-E3103	ASSY-FINISH REAR PEACEL SHELF GRAY #1707	1	1	SEDAN					
	2701	80919-89902	CLIP-REAR PILLAR SHELF FIX	4	50	SEDAN					
	2801	80919-89903	CLIP-REAR PILLAR SHELF	2	10	SEDAN					
	2901	79920-E0110	INSULATOR-SEAT BACK	1	5	SEDAN			Y	Y	79920-E0100
	3001	79924-E0110	INSULATOR-SEAT BACK	2	5	SEDAN			Y	Y	79924-E0100
	3101	79930-E0100	ASSY-INSULATOR SEAT BACK	1	1	SEDAN					
	3201	00510-61010	SCREW-TAPPING TYPE A	6	50	SEDAN					
●	3301	79935-E0101	LETHER-SEAT BACK SIDE RH	1	1	SEDAN			Y	Y	79935-E0100
●	3401	79936-E0101	LETHER-SEAT BACK SIDE LH	1	1	SEDAN			Y	N	79936-E0100

NOTE:

© 1972 NISSAN MOTOR CO., LTD.

REVISED: DECEMBER, 1972

PRINTED IN JAPAN

NOTE

Printed in Japan

NISSAN MOTOR CO., LTD.

REAR WINDOW GLASS (SEDAN)

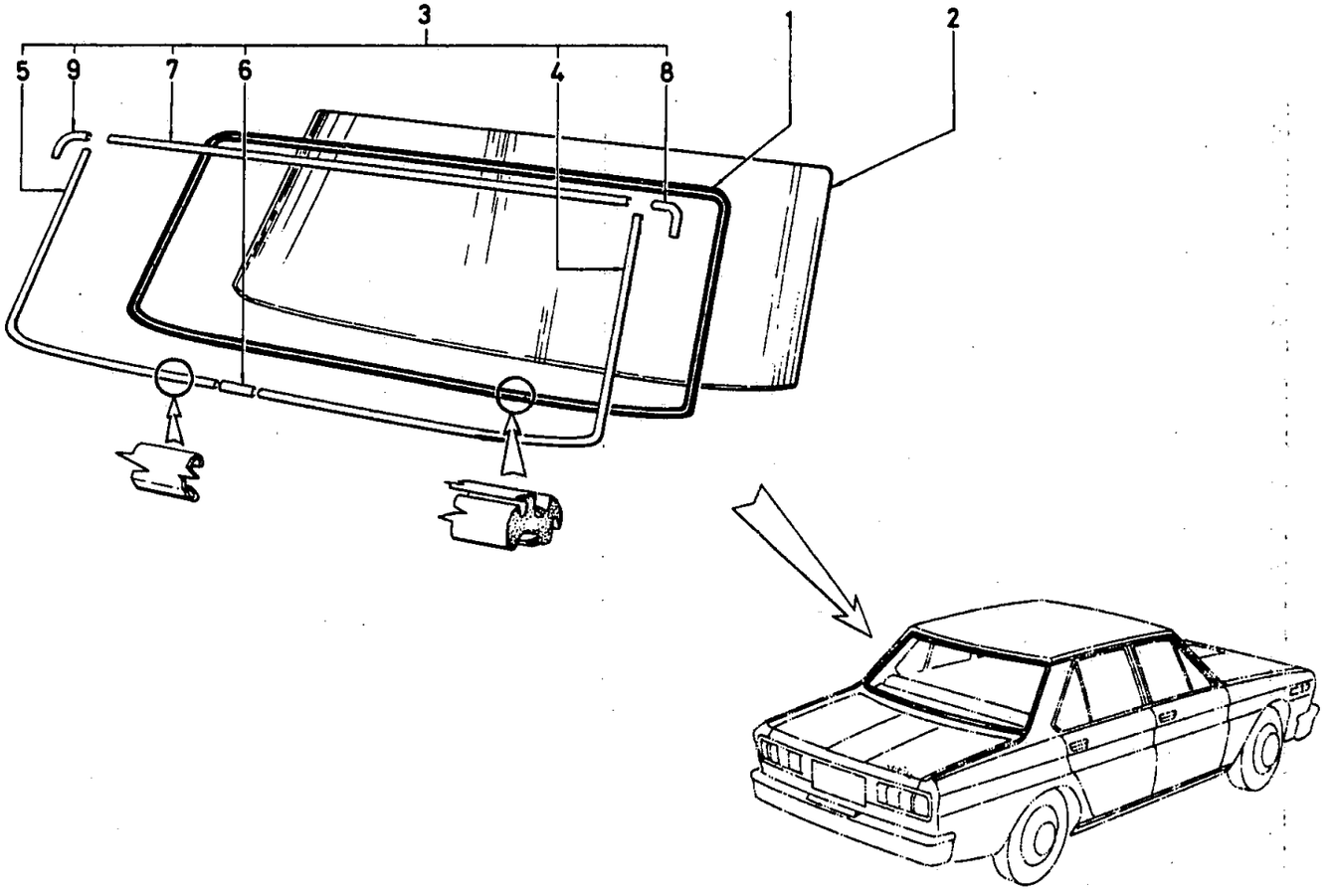

ILLUSTRATION **227**

© 1972 NISSAN MOTOR CO., LTD.

REVISED: DECEMBER, 1972

PRINTED IN JAPAN

REAR WINDOW GLASS (SEDAN)

S	KEY NO.	PART NO.	DESCRIPTION	QTY	UNIT PKG FOR DIST.	APPLIED MODEL	APPLIED DATE FROM	APPLIED DATE UP TO	ICA N	ICA F	SUPERSEDED
	101	- 79710-E0100	WEATHERSTRIP-REAR WINDOW	1	1	SEDAN					
	201	- 79713-E0100	GLASS-REAR WINDOW TINTED & TEMPERED 5.0T	1	1	SUPER CUSTOM P-DX					
	02	- 79713-E0700	GLASS-REAR WINDOW TEMPERED 5.0T	1	1	SUPER CUSTOM STD					
	301	- 79810-E0100	SET-MOULDING REAR WINDOW	1	1	SEDAN					
	401	- 79811-E0100	MOULDING-REAR WINDOW RH	1		SEDAN					
	501	- 79812-E0100	MOULDING-REAR WINDOW LH	1		SEDAN					
	601	- 72813-73000	CLIP-MOULDING REAR WINDOW	1	5	SEDAN					
	701	- 79814-E0100	MOULDING-REAR UPPER	1		SEDAN					
	801	- 79816-E0100	MOULDING-REAR CORNER RH	1	5	SEDAN					
	901	- 79817-E0100	MOULDING-REAR CORNER LH	1	5	SEDAN					

NOTE:

© 1972 NISSAN MOTOR CO., LTD.

PRINTED IN JAPAN

NOTE

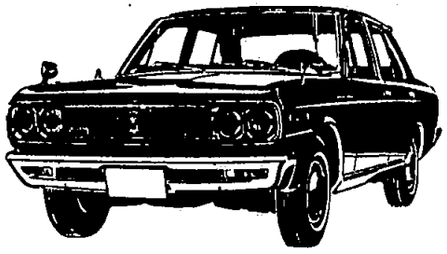

NISSAN MOTOR CO., LTD.

Printed in Japan

NOTE

Printed in Japan

NISSAN MOTOR CO., LTD.

FRONT DOOR PANEL (SEDAN)

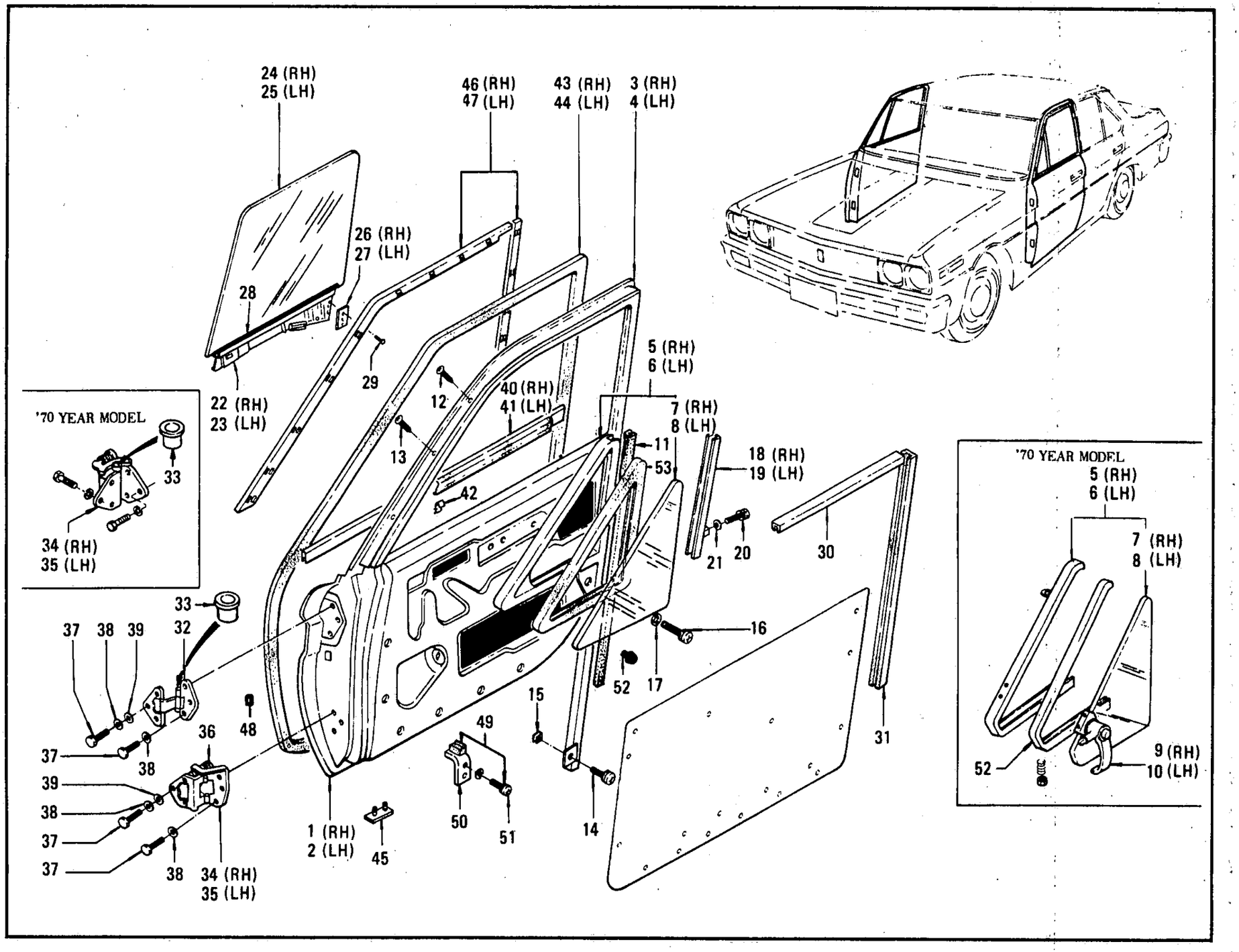

ILLUSTRATION **228**

© 1972 NISSAN MOTOR CO., LTD.

REVISED: DECEMBER, 1972

PRINTED IN JAPAN

FRONT DOOR PANEL (SEDAN)

S	KEY NO.	PART NO.	DESCRIPTION	Q'TY	UNIT PKG FOR DIST.	APPLIED MODEL	APPLIED DATE FROM	APPLIED DATE UP TO	ICA N	ICA F	SUPERSEDED
	101	80100-E0130	ASSY-PANEL FRONT DOOR RH	1	1	SEDAN					
	201	80101-E0130	ASSY-PANEL FRONT LH	1	1	SEDAN					
	301	80210-E0100	ASSY-SASH FRONT DOOR RH	1	1	SEDAN					
	401	80211-E0100	ASSY-SASH FRONT DOOR LH	1	1	SEDAN					
	501	80202-E0300	ASSY-VENT FRONT DOOR RH	1	1	SEDAN		0969			
	02	80202-E3200	ASSY-VENT FRONT DOOR RH	1	1	SEDAN EXC STD	1069				
	03	80202-E3001	ASSY-VENT FRONT DOOR	1	1	STD	1069				
	04	H0202-E3201	WEATHERSTRIP FRONT DOOR VENT LH	1	1	SEDAN EXC STD	1069				
	601	80203-E0300	ASSY-VENT FRONT DOOR LH	1	1	SEDAN		0969			
	02	80203-E3200	ASSY-VENT FRONT DOOR LH	1	1	SEDAN EXC STD	1069				
	03	80203-E3001	ASSY-VENT FRONT DOOR LH	1	1	STD	1069				
	04	H0203-E3201	WEATHERSTRIP FRONT DOOR VENT LH	1	1	SEDAN EXC STD	1069				
	701	80255-E0100	GLASS-VENT FRONT DOOR RH TINTED & TEMPERED 5.0T	1	1	SUPER DELUXE		0969			
	02	80255-E0300	GLASS-VENT FRONT DOOR RH TEMPERED 5.0T	1	1	PERSONAL STD		0969			
	03	80255-E3200	GLASS-VENT FRONT DOOR RH TEMPERED 5.0T	1	1	SEDAN EXC STD	1069				
	04	80255-E3001	GLASS-VENT FRONT DOOR RH TEMPERED 5.0T	1	1	STD	1069				
	801	80256-E0100	GLASS-VENT FRONT DOOR LH TINTED & TEMPERED	1	1	SUPER					
	02	80256-E0300	GLASS-VENT FRONT DOOR LH TEMPERED 5.0T	1	1	PERSONAL STD		0969			
	03	80256-E3200	GLASS-VENT FRONT DOOR LH TEMPERED 5.0T	1	1	SEDAN EXC STD DIESEL	1069				

NOTE:

REVISED: DECEMBER, 1972

© 1972 NISSAN MOTOR CO., LTD.

PRINTED IN JAPAN

FRONT DOOR PANEL (SEDAN)

S	KEY NO.	PART NO.	DESCRIPTION	Q'TY	UNIT PKG FOR DIST.	APPLIED MODEL	APPLIED DATE FROM	APPLIED DATE UP TO	ICA N	ICA F	SUPERSEDED
	804	80256-E3001	GLASS-VENT FRONT DOOR LH TEMPERED 5.0T	1	1	STD DIESEL	1069				
	901	80260-E3200	ASSY-CATCH HANDLE VENT RH	1	1	SEDAN					
	1001	80261-E3200	ASSY-CATCH HANDLE VENT LH	1	1	SEDAN					
	1101	80335-E0100	RUBBER-GLASS RUN A	2	5	SEDAN					
	1201	00320-80810	SCREW-MACHINE FIXING VENT TO SASH	2	50	SEDAN					
	1301	80294-73000	SCREW FIXING VENT TO SASH	4	10	SEDAN					
*	1401	00314-41210	SCREW-MACHINE W/WASHER FIX VENT TO PANEL UPPER	2	50	SEDAN					
	02	00314-41212	SCREW-MACHINE W/WASHER FIX VENT TO PANEL UPPER	2	50	SEDAN	1069		Y	N	00314-41210
	1501	80298-73000	NUT-SPRING RETAINING FIXING VENT TO PANEL LOWER	2	10	SEDAN					
	1601	00314-44510	SCREW-MACHINE W/WASHER FIX VENT TO PANEL LOWER	2	50	SEDAN					
	1701	00915-51410	WASHER-PLAIN FIXING VENT TO PANEL LOWER	2	50	SEDAN					
	1801	80214-E0100	ASSY-SASH FRONT DOOR LOWER RH	1	1	SEDAN					
	1901	80215-E0100	ASSY-SASH FRONT DOOR LOWER LH	1	1	SEDAN					
	2001	00314-41610	SCREW-MACHINE W/WASHER FIX SASH LOWER TO PANEL	4	50	SEDAN					
	2101	00915-41410	WASHER-PLAIN FIXING SASH LOWER TO PANEL	4	50	SEDAN					
	2201	80302-E0100	ASSY-CHANNEL GLASS FRONT DOOR BOTTOM RH	1	1	SEDAN					
	2301	80303-E0100	ASSY-CHANNEL GLASS FRONT DOOR BOTTOM LH	1	1	SEDAN					

NOTE:

© 1972 NISSAN MOTOR CO., LTD.

REVISED: DECEMBER, 1972
PRINTED IN JAPAN

FRONT DOOR PANEL (SEDAN)

S	KEY NO.	PART NO.	DESCRIPTION	Q'TY	UNIT PKG FOR DIST.	APPLIED MODEL	APPLIED DATE FROM	APPLIED DATE UP TO	ICA N	ICA F	SUPERSEDED
	2401	80311-E0100	GLASS-WINDOW FR DOOR RH TINTED & TEMPERED 5.0T	1	1	SEDAN EXC STD DISEL PERSONAL					
	02	80311-E0300	GLASS-WINDOW FR DOOR RH TEMPERED 5.0T	1	1	PERSONAL STD DIESEL					
	2501	80312-E0100	GLASS-WINDOW FR DOOR LH TINTED & TEMPERED 5.0T	1	1	SEDAN EXC STD DIESEL PERSONAL					
	02	80312-E0300	GLASS-WINDOW FR DOOR LH TEMPERED 5.0T	1	1	PERSONAL STD DIESEL					
	2601	80304-E0100	GUIDE-FRONT DOOR WINDOW BOTTOM RH	1	5	SEDAN					
	2701	80305-E0100	GUIDE-FRONT DOOR WINDOW BOTTOM LH	1	5	SEDAN					
	2801	80306-E0100	RUBBER-GLAZING FRONT DOOR WINDOW	2	5	SEDAN					
	2901	00660-40810	RIVET	6	50	SEDAN					
	3001	80336-E0100	RUBBER-GLASS SUN B	1	5	SEDAN					
	3101	80337-E0100	RUBBER-GLASS RUN C	1	5	SEDAN					
	3201	80400-73000	ASSY-HINGE FRONT DOOR UPPER	2	1	SEDAN					
	3301	H0400-73002	BUSH-DOOR HINGE	2	10	SEDAN					
*	3401	80420-E0100	ASSY-HINGE FRONT DOOR LOWER RH	1		SEDAN		0969			
	02	80420-E3200	ASSY-HINGE FRONT DOOR LOWER RH	1	1	SEDAN	1069				
*	3501	80421-E0100	ASSY-HINGE FRONT DOOR LOWER LH	1		SEDAN		0969			
	02	80421-E3200	ASSY-HINGE FRONT DOOR LOWER LH	1	1	SEDAN	1069				
	3601	80422-73001	SPRING-HINGE DOOR LOWER	2	5	SEDAN		0969			

NOTE:

© 1972 NISSAN MOTOR CO., LTD.

PRINTED IN JAPAN

FRONT DOOR PANEL (SEDAN)

S	KEY NO.	PART NO.	DESCRIPTION	Q'TY	UNIT PKG FOR DIST.	APPLIED MODEL	APPLIED DATE FROM	APPLIED DATE UP TO	ICA N	ICA F	SUPERSEDED
	3602	80432-28501	SPRING-HINGE DOOR LOWER	2	10	SEDAN	1069				
	3701	00144-52010	BOLT-HEXAGON 5/16-24UNF	24	50	SEDAN					
	3801	00915-11510	WASHER-SPRING LOCK 5/16 #2	24	50	SEDAN					
	3901	00915-51510	WASHER-PLAIN 5/16 #2	12	50	SEDAN					
	4001	80820-E0100	ASSY-MOULDING FRONT DOOR OUT SIDE RH	1	1	SEDAN					
	4101	80821-E0100	ASSY-MOULDING FRONT DOOR OUT SIDE LH	1	1	SEDAN					
	4201	80825-E0100	CLIP-MOULDING DOOR	10	10	SEDAN					
	4301	80830-E0100	ASSY-W/STRIP FRONT DOOR RH	1	1	SEDAN					
	4401	80831-E0100	ASSY-W/STRIP FRONT DOOR LH	1	1	SEDAN					
*	4501	80840-21000	COVER-DRAIN HOLE	2	5	SEDAN					
	02	80842-73000	COVER-DRAIN HOLE	2	10	SEDAN					
	4601	80280-E0100	SET-COVER SASH FRONT DOOR RH	1	1	SUPER CUSTOM DX					
	4701	80281-E0100	SET-COVER SASH FRONT DOOR LH	1	1	SUPER CUSTOM DX					
	4801	76816-73000	GROMMET-RUBBER	2	10	SEDAN					
	4901	80860-E0100	ASSY-GLASS STOPPER	2	1	SEDAN					
*	5001	80317-00800	CUSHION-WINDOW GLASS	2	50	SEDAN					
	02	80317-E0199	CUSHION-WINDOW GLASS	2	5	SEDAN			C	N	80317-00800
	5101	00314-41214	SCREW-MACHINE WITH WASHER 1/4-28	8	50	SEDAN					
	5201	80865-E0100	RUBBER-BUMPER FRONT DOOR	2	10	SEDAN					
	5301	H0202-E0101	RUBBER-GLASS RH	1	1	SEDAN		0969			
	02	H0203-E0101	RUBBER-GLASS LH	1	1	SEDAN		0969			

NOTE:

© 1972 NISSAN MOTOR CO., LTD.

REVISED: DECEMBER, 1972
PRINTED IN JAPAN

FRONT DOOR PANEL (SEDAN)

S	KEY NO.	PART NO.	DESCRIPTION	Q'TY	UNIT PKG FOR DIST.	APPLIED MODEL	APPLIED DATE FROM	APPLIED DATE UP TO	ICA N	ICA F	SUPERSEDED
	5309	H0202-E3201	RUBBER-GLASS RH	1	1	SEDAN	1069				
	04	H0203-E3201	RUBBER-GLASS LH	2	1	SEDAN	1069				

NOTE:

© 1972 NISSAN MOTOR CO., LTD.

PRINTED IN JAPAN

NOTE

NISSAN MOTOR CO., LTD.

Printed in Japan

NOTE

Printed in Japan

NISSAN MOTOR CO., LTD.

FRONT DOOR LOCK & REGULATOR (SEDAN)

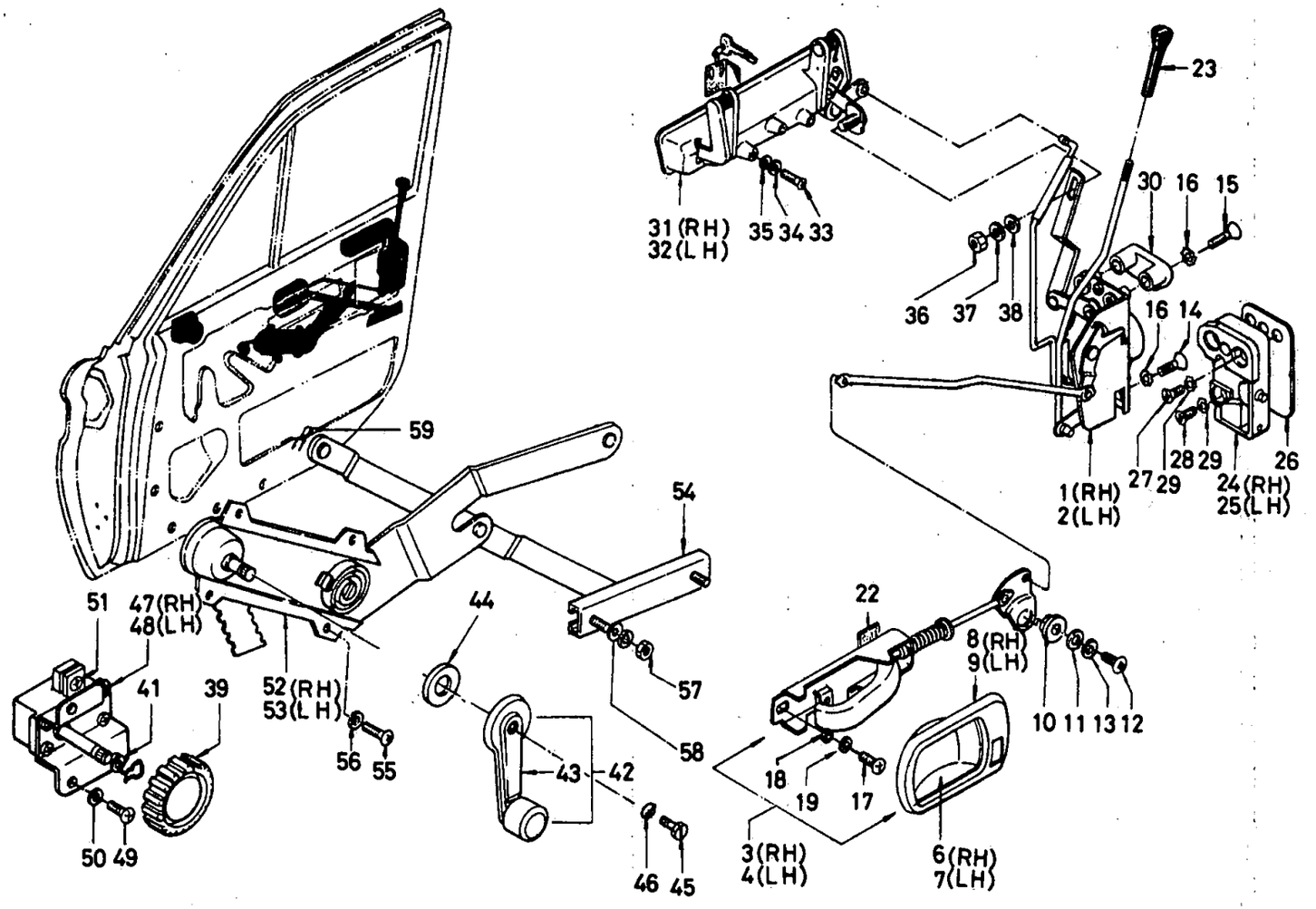

ILLUSTRATION **229**

© 1972 NISSAN MOTOR CO., LTD.

REVISED: DECEMBER, 1972

PRINTED IN JAPAN

FRONT DOOR LOCK & REGULATOR (SEDAN)

S	KEY NO.	PART NO.	DESCRIPTION	Q'TY	UNIT PKG FOR DIST.	APPLIED MODEL	APPLIED DATE FROM	APPLIED DATE UP TO	ICA N	ICA F	SUPERSEDED
	101	80502-E0101	ASSY-LOCK FRONT DOOR RH	1	1	SEDAN			Y	Y	80502-E0100
	201	80503-E0101	ASSY-LOCK FRONT DOOR LH	1	1	SEDAN			Y	Y	80503-E0100
	301	80504-E0100	ASSY-REMOTE CONTROL RH	1	1	SEDAN					
	401	80505-E0100	ASSY-REMOTE CONTROL LH	1	1	SEDAN					
	501	80599-E0100	ASSY-COVER DUST INSIDE HANDLE	2	1	SEDAN					
	601	80512-E0100	ESCUTCHEON-REMOTE CONTROL RH	1	5	SEDAN					
	02	80512-E0101	ESCUTCHEON-REMOTE CONTROL RH	1	5				C	N	80512-E0100
	701	80513-E0100	ESCUTCHEON-REMOTE CONTROL LH	1	5	SEDAN					
	02	80513-E0101	ESCUTCHEON-REMOTE	1	5	SEDAN		0969	C	N	80513-E0100
	801	80517-E0100	ASSY-COVER REMOTE CONTROL RH	1	5	SEDAN					
	02	80517-E0101	ASSY-COVER REMOTE CONTROL RH	1	5	SEDAN			C	N	80517-E0100
	901	80518-E0100	ASSY-COVER REMOTE CONTROL LH	1	5	SEDAN					
	02	80518-E0101	ASSY-COVER REMOTE CONTROL LH	1	5	SEDAN			C	N	80518-E0100
	1001	80515-E0101	COLLAR-BELL CRANK	2	10	SEDAN			Y	Y	80515-E0100
	1101	08915-53610	WASHER-BELL CRANK	2	50	SEDAN			Y	Y	80516-E0100
	1201	00314-41610	SCREW-MACHINE	2	50	SEDAN					
	1301	00915-11410	WASHER-LOCK SPRING	2	50	SEDAN					
	1401	00324-40810	SCREW-MACHINE FIXING LOCK TO DOOR	4	50	SEDAN					
	1501	00324-42012	SCREW-MACHINE FIXING LOCK TO DOOR	4	50	SEDAN					
	1601	00916-41410	WASHER-TOOTH OUTERNAL FIXING LOCK TO DOOR	8	50	SEDAN					
*	1701	00414-40810	SCREW-MACHINE FIXING REMOTE CONTROL TO DOOR	4	50	SEDAN					

NOTE:

PRINTED IN JAPAN

© 1972 NISSAN MOTOR CO., LTD.

FRONT DOOR LOCK & REGULATOR (SEDAN)

S	KEY NO.	PART NO.	DESCRIPTION	QTY	UNIT PKG FOR DIST.	APPLIED MODEL	APPLIED DATE FROM	APPLIED DATE UP TO	ICA N	ICA F	SUPERSEDED
	17D2	00414-40812	SCREW-MACHINE FIXING REMOTE CONTROL TO DOOR	4	50	SEDAN			Y	N	00414-40810
	18D1	00915-41410	WASHER-PLAIN FIXING REMOTE CONTROL TO DOOR	4	50	SEDAN					
	19D1	00915-11410	WASHER-LOCK SPRING FIXING REMOTE CONTROL TO DOOR	4	50	SEDAN					
	20D1	00916-40810	WASHER TOOTH OUTERNAL FIXING COVER TO REMOTE CONT	2	50	SEDAN					
	21D1	00420-60810	SCREW-MACHINE FIXING COVER TO REMOTE CONTROL	2		SEDAN					
	22D1	80514-E0101	SILENCER-DOOR LOCK LINK	2	10	SEDAN			Y	Y	80514-E0100
	23D1	80595-78803	KNOB-DOOR LOCK L=10 CHROME COATING	2	10	SUPER CUSTOM DX					
	D2	80595-73002	KNOB-DOOR LOCK L=15 CHROME COATING	2	10	SUPER CUSTOM DX					
	D3	80595-78804	KNOB-DOOR LOCK L=15 CHROME COATING	2	10	SUPER CUSTOM DX			C	C	80595-73002
	D4	80595-18402	KNOB-DOOR LOCK L=5 CHROME COATING	2	10	SUPER CUSTOM DX					
*	D5	80595-21003	KNOB-DOOR LOCK L=10 BLACK	2	10	SEDAN EXC SUPER CUSTOM DELUXE					
	D6	80595-N1600	KNOB-DOOR LOCK L=10 BLACK	2	5	SEDAN EXC SUPER CUSTOM DELUXE			Y	N	80595-21003
*	D7	80595-21004	KNOB-DOOR LOCK L=15 BLACK	2	10	SEDAN EXC SUPER CUSTOM DELUXE					
	D8	80595-N1601	KNOB-DOOR LOCK L=15 BLACK	2	5	SEDAN EXC SUPER CUSTOM DELUXE			Y	N	80595-21004
*	D9	80595-21005	KNOB-DOOR LOCK L=5 BLACK	2	10	SEDAN EXC SUPER CUSTOM DELUXE					
	10	80595-N1602	KNOB-DOOR LOCK L=5 BLACK	2	5	SEDAN EXC SUPER CUSTOM DELUXE			Y	N	80595-21005

NOTE:

© 1972 NISSAN MOTOR CO., LTD.

REVISED: DECEMBER, 1972
PRINTED IN JAPAN

FRONT DOOR LOCK & REGULATOR (SEDAN)

S	KEY NO.	PART NO.	DESCRIPTION	Q'TY	UNIT PKG FOR DIST.	APPLIED MODEL	APPLIED DATE FROM	APPLIED DATE UP TO	ICA N	ICA F	SUPERSEDED
*	2311	80595-21003	KNOB-DOOR LOCK L=5 BLACK	2	10	SEDAN EXC SUPER CUSTOM DELUXE			Y	N	80595-21005
	12	80595-N1600	KNOB-DOOR LOCK L=5 BLACK	2	5	SEDAN EXC SUPER CUSTOM DELUXE			Y	N	80595-21003
*	2401	80570-E0100	ASSY-STRIKER DOOR LOCK RH	1	1	SEDAN					
	02	80570-E0101	ASSY-STRIKER DOOR LOCK RH	1	1	SEDAN			Y	N	80570-E0100
*	2501	80571-E0100	ASSY-STRIKER DOOR LOCK LH	1	1	SEDAN					
	02	80571-E0101	ASSY-STRIKER DOOR LOCK LH	1	1	SEDAN			Y	N	80571-E0100
	2601	80575-E0100	SHIM-ADJUSTING DOOR LOCK STRIKER	AR	5	SEDAN					
	2701	00324-53010	SCREW TO ATTACH STRIKER TO PILLAR	8	50	SEDAN					
	2801	00324-51210	SCREW TO ATTACH STRIKER TO PILLAR	4	50	SEDAN					
	2901	00916-41510	WASHER-LOCK TOOTH TO ATTACH STRIKER TO PILLAR	12	50	SEDAN					
*	3001	80572-E0100	GUIDE-STRIKER	2	5	SEDAN					
	02	80572-E0101	GUIDE-STRIKER	2	10	SEDAN			Y	N	80572-E0100
	3101	80605-E0101	ASSY-HANDLE FRONT DOOR OUTSIDE RH	1	1	SEDAN			Y	Y	80605-E0100
	3201	80606-E0101	ASSY-HANDLE FRONT DOOR OUTSIDE LH	1	1	SEDAN			Y	Y	80606-E0100
	3301	00314-01214	SCREW-HANDLE TO DOOR	6	50	SEDAN					
	3401	00915-11010	WASHER-LOCK HANDLE TO DOOR	6	50	SEDAN					
	3501	00915-41010	WASHER-PLAIN HANDLE TO DOOR	6	50	SEDAN					
	3601	00911-14010	NUT HANDLE TO LOCK	2	50	SEDAN					
	3701	00915-11010	WASHER-LOCK HANDLE TO LOCK	2	50	SEDAN					

NOTE:

© 1972 NISSAN MOTOR CO., LTD.

PRINTED IN JAPAN

FRONT DOOR LOCK & REGULATOR (SEDAN)

S	KEY NO.	PART NO.	DESCRIPTION	Q'TY	UNIT PKG FOR DIST.	APPLIED MODEL	APPLIED DATE FROM	APPLIED DATE UP TO	ICA N	ICA F	SUPERSEDED
	38D1	00915-41010	WASHER-PLAIN HANDLE TO LOCK	2	50	SEDAN					
	39D1	80752-E0101	ASSY-DIAL DOOR VENTILATOR REGULATOR	2	1	SEDAN		0969			
	40D1	80757-E0100	LIFT-SPRING DIAL	2	10	SEDAN		0969			
	41D1	80756-E0101	WASHER-SEATING DIAL	2	10	SEDAN		0969			
	42D1	80760-E0100	ASSY-HANDLE DOOR WINDOW REGULATOR	2	1	SEDAN					
	43D1	80764-E0100	COVER-HANDLE DOOR WINDOW REGULATOR	2	10	SEDAN					
	44D1	80763-E0101	WASHER-SEATING HANDLE	2	10	SEDAN			Y	Y	80763-E0100
*	45D1	00424-01210	SCREW-MACHINE	2	50	SEDAN					
	D2	00424-01212	SCREW-MACHINE	2	50	SEDAN			Y	N	00424-01210
	46D1	00916-41010	WASHER-TOOTH OUTERNAL	2	50	SEDAN					
*	47D1	80750-E0101	ASSY-DOOR VENTILATOR REGULATOR RH	1	1	SEDAN		0969			
*	48D1	80751-E0101	ASSY-DOOR VENTILATOR REGULATOR LH	1	1	SEDAN		0969			
	D2	80751-E0102	ASSY-DOOR VENTILATOR REGULATOR LH	1	1	SEDAN		0969	Y	N	80751-E0101
*	49D1	00314-41010	SCREW-MACHINE FIXING DOOR VENT REGULATOR	6	50	SEDAN		0969			
	D2	00314-41012	SCREW-MACHINE FIXING DOOR VENT REGULATOR	6	50	SEDAN			Y	N	00314-41010
	50D1	00915-11410	WASHER-SPRING LOCK FIXING DOOR VENT REGULATOR	6	50	SEDAN		0969			
	51D1	00414-41610	SCREW-MACHINE FIXING DOOR VENT REGULATOR	2	50	SEDAN		0969			
	52D1	80700-E0100	ASSY-REGULATOR DOOR WINDOW FRONT RH	1	1	SEDAN					

NOTE:

© 1972 NISSAN MOTOR CO., LTD.

REVISED: DECEMBER, 1972
PRINTED IN JAPAN

FRONT DOOR LOCK & REGULATOR (SEDAN)

S	KEY NO.	PART NO.	DESCRIPTION	Q'TY	UNIT PKG FOR DIST.	APPLIED MODEL	APPLIED DATE FROM	APPLIED DATE UP TO	ICA N	ICA F	SUPERSEDED
	5301	80701-E0100	ASSY-REGULATOR DOOR WINDOW FRONT LH	1	1	SEDAN					
	5401	80710-E0100	ASSY-GUIDE DOOR WINDOW REGULATOR	2	5	SEDAN					
	5501	00314-41214	SCREW-MACHINE	8	50	SEDAN					
	5601	00915-11410	WASHER-SPRING LOCK	4	50	SEDAN					
	5701	00911-34410	NUT	4	50	SEDAN					
	5801	00915-41410	WASHER-PLAIN	4	50	SEDAN					
	5901	82727-E0100	SPRING-RETAINER DOOR WINDOW	2	10	SEDAN					
	6001	82728-65000	WASHER-DOOR WINDOW	2	10	SEDAN					

NOTE:

© 1972 NISSAN MOTOR CO., LTD.

PRINTED IN JAPAN

NOTE

NISSAN MOTOR CO., LTD.

Printed in Japan

NOTE

Printed in Japan

NISSAN MOTOR CO., LTD.

FRONT DOOR TRIMMING (SEDAN)

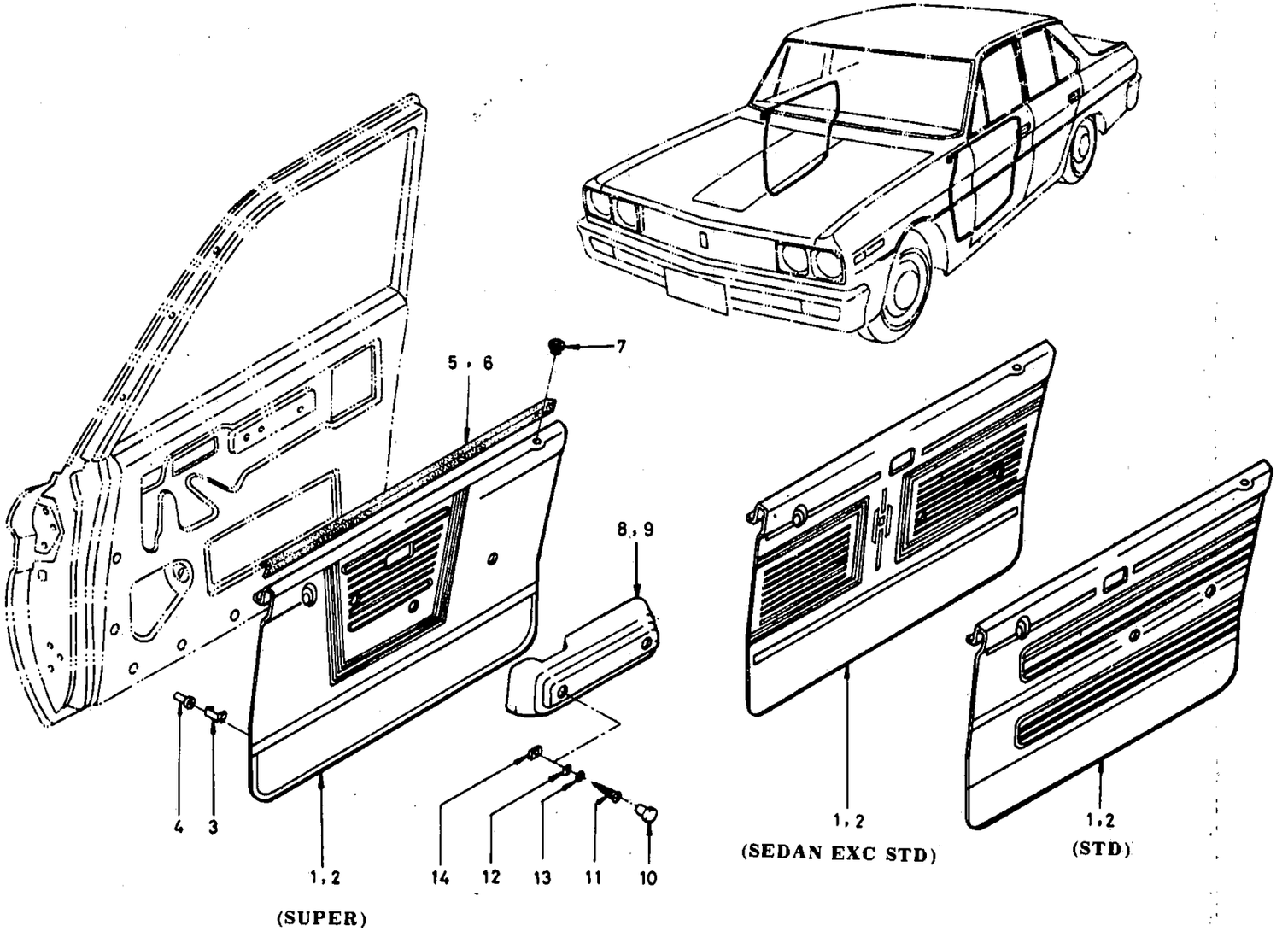

ILLUSTRATION **230-1**

© 1972 NISSAN MOTOR CO., LTD.

REVISED: DECEMBER, 1972

PRINTED IN JAPAN

FRONT DOOR FINISH (SEDAN '69 YEAR MODEL)

('69 YEAR MODEL)

SUPER

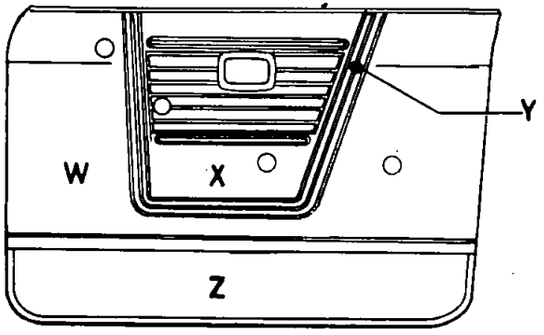

SUPER

KEY NO.	PART NO.	X COLLOR	X COLLOR NO.	Y COLLOR	Y COLLOR NO.	Z COLLOR	Z COLLOR NO.	W COLLOR	W COLLOR NO.
1–01 2–01	80900 E0100 80901 E0100	RED	#1389	RED	#1393	RED	#1447	RED	#1373
1–03 2–03	80900 E0101 80901 E0101	BLACK	#1390	BLACK	#1375	BLACK	#1426	BLACK	#1374
1–05 2–05	80900 E0102 80901 E0102	BROWN	#1391	BROWN	#1394	BROWN	#1449	BROWN	#1381
1–07 2–07	80900 E0103 80901 E0103	GRAY	#1392	GRAY	#1374	GRAY	#1429	GRAY	#1375

SEDAN (EXC STD)

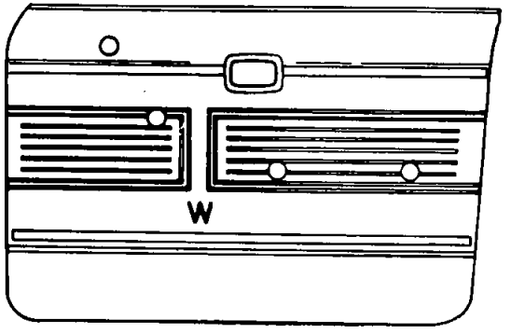

SEDAN(EXC STD)

KEY NO.	PART NO.	X COLLOR	X COLLOR NO.	Y		Z		W	
1–09 2–09	80900 E0200 80901 E0200	RED	#1373						
1–11 2–11	80900 E0201 80901 E0201	BLACK	#1374						
1–13 2–13	80900 E0202 80901 E0202	BROWN	#1381						
1–15 1–15	80900 E0203 80901 E0203	GRAY	#1375						
1–17 2–17	80900 E0204 80901 E0204	BLUE	#1703						

STANDARD

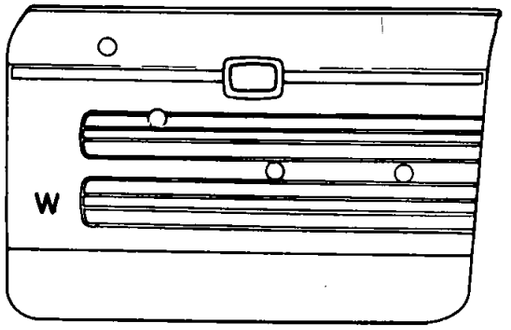

STANDARD

KEY NO.	PART NO.	W COLLOR	W COLLOR NO.						
1–21 2–21	80900 E0300 80901 E0300	BROWN	#1381						
1–19 2–19	80900 E0301 80901 E0301	BLACK	#1374						

© 1972 NISSAN MOTOR CO., LTD.

PRINTED IN JAPAN

FRONT DOOR FINISH (SEDAN '70 YEAR MODEL)

('70 YEAR MODEL)

SUPER CUSTOM

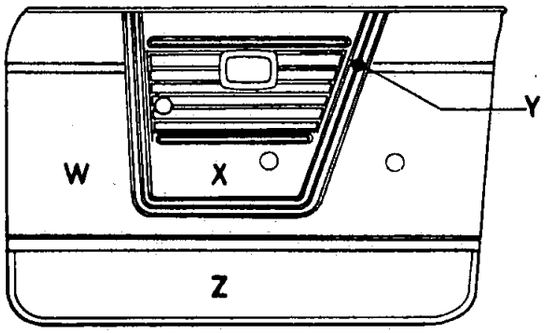

SUPER CUSTOM

KEY NO.	PART NO.	X COLLOR	X COLLOR NO.	Y COLLOR	Y COLLOR NO.	Z COLLOR	Z COLLOR NO.	W COLLOR	W COLLOR NO.
1–02 2–02	80900 E3200 80901 E3200	RED	#1389	RED	#1393	RED	#1447	RED	#1373
1–04 2–04	80900 E3201 80901 E3201	BLACK	#1390	BLACK	#1375	BLACK	#1426	BLACK	#1374
1–06 2–06	80900 E3202 80901 E3202	BROWN	#1391	BROWN	#1394	BROWN	#1449	BROWN	#1381
1–08 2–08	80900 E3203 80901 E3203	GRAY	#1392	GRAY	#1374	GRAY	#1429	GRAY	#1375

PERSONAL–DELUXE

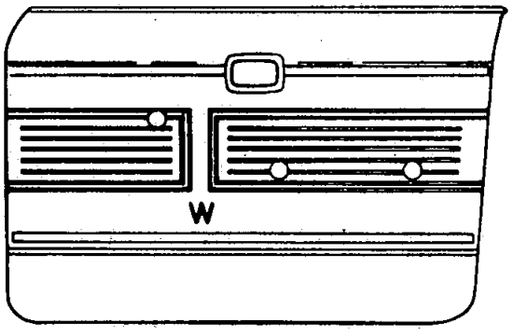

PERSONAL–DELUXE

KEY NO.	PART NO.	W COLLOR	W COLLOR NO.						
1–10 2–10	80900 E3000 80901 E3000	RED	#1373						
1–12 2–12	80900 E3001 80901 E3001	BLACK	#1374						
1–14 2–14	80900 E3002 80901 E3002	BROWN	#1381						
1–16 2–16	80900 E3003 80901 E3003	GRAY	#1375						
1–18 2–18	80900 E3004 80901 E3004	BLUE	#1703						

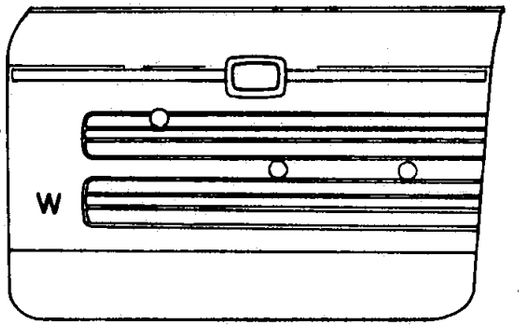

STANDARD

STANDARD

KEY NO.	PART NO.	W COLLOR	W COLLOR NO.						
1–20 2–20	80900 E3401 80901 E3401	BLUE	#1381						
1–22 2–22	80900 E3400 80901 E3400	BROWN	#1374						

© 1972 NISSAN MOTOR CO., LTD.

REVISED: DECEMBER, 1972

PRINTED IN JAPAN

FRONT DOOR TRIMMING (SEDAN)

S	KEY NO.	PART NO.	DESCRIPTION	QTY	UNIT PKG FOR DIST.	APPLIED MODEL	APPLIED DATE FROM	APPLIED DATE UP TO	ICA N	ICA F	SUPERSEDED
	101	80900-E0100	ASSY-FINISH FR DOOR RH #1373 #1389 #1393 #1447	1	1	SUPER		0969			
	02	80900-E3200	ASSY-FINISH FR DOOR RH #1373 #1389 #1393 #1447	1	1	SUPER CUSTOM	1069				
	03	80900-E0101	ASSY-FINISH FR DOOR RH #1374 #1390 #1375 #1426	1	1	SUPER		0969			
	04	80900-E3201	ASSY-FINISH FR DOOR RH #1374 #1390 #1375 #1426	1	1	SUPER CUSTOM	1069				
	05	80900-E0102	ASSY-FINISH FR DOOR RH #1381 #1391 #1394 #1449	1	1	SUPER		0969			
	06	80900-E3202	ASSY-FINISH FR DOOR RH #1381 #1391 #1394 #1449	1	1	SUPER CUSTOM	1069				
	07	80900-E0103	ASSY-FINISH FR DOOR RH #1375 #1392 #1374 #1429	1	1	SUPER		0969			
	08	80900-E3203	ASSY-FINISH FR DOOR RH #1375 #1392 #1374 #1429	1	1	SUPER CUSTOM	1069				
	09	80900-E0200	ASSY-FINISH FR DOOR RH #1373	1	1	SEDAN EXC STD		0969			
	10	80900-E3000	ASSY-FINISH FRONT DOOR RH #1373	1	1	P-DX	1069				
	11	80900-E0201	ASSY-FINISH FRONT DOOR RH #1374	1	1	SEDAN EXC STD		0969			
	12	80900-E3001	ASSY-FINISH FRONT DOOR RH #1374	1	1	P-DX	1069				
	13	80900-E0202	ASSY-FINISH FRONT DOOR RH #1381	1	1	SEDAN EXC STD		0969			
	14	80900-E3002	ASSY-FINISH FRONT DOOR RH #1381	1	1	P-DX	1069				
	15	80900-E0203	ASSY-FINISH FRONT DOOR RH #1375	1	1	SEDAN EXC STD		0969			
	16	80900-E0204	ASSY-FINISH FRONT DOOR RH #1703	1	1	SEDAN EXC STD		0969			

NOTE:

© 1972 NISSAN MOTOR CO., LTD.

PRINTED IN JAPAN

FRONT DOOR TRIMMING (SEDAN)

S	KEY NO.	PART NO.	DESCRIPTION	QTY	UNIT PKG FOR DIST.	APPLIED MODEL	APPLIED DATE FROM	APPLIED DATE UP TO	ICA N	ICA F	SUPERSEDED
	117	80900-E3004	ASSY-FINISH FRONT DOOR RH #1703	1	1	P-DX	1069				
	18	80900-E0301	ASSY-FINISH FRONT DOOR RH #1381 BLUE	1	1	STANDARD		0969			
	19	80900-E3401	ASSY-FINISH FRONT DOOR RH #1381 BLUE	1	1	STANDARD	1069				
	20	80900-E0300	ASSY-FINISH FRONT DOOR RH #1374 BROWN	1	1	STANDARD		0969			
	21	80900-E3400	ASSY-FINISH FRONT DOOR RH #1374 BROWN	1	1	STANDARD	1069				
	201	80901-E0100	ASSY-FINISH FR DOOR LH #1373 #1389 #1393 #1447	1	1	SUPER		0969			
	02	80901-E3200	ASSY-FINISH FR DOOR LH #1373 #1389 #1393 #1447	1	1	SUPER CUSTOM	1069				
	03	80901-E0101	ASSY-FINISH FR DOOR LH #1374 #1390 #1375 #1426	1	1	SUPER		0969			
	04	80901-E3201	ASSY-FINISH FR DOOR LH #1374 #1390 #1375 #1426	1	1	SUPER CUSTOM	1069				
	05	80901-E0102	ASSY-FINISH FR DOOR LH #1381 #1391 #1394	1	1	SUPER		0969			
	06	80901-E3202	ASSY-FINISH FR DOOR LH #1381 #1391 #1394 #1449	1	1	SUPER CUSTOM	1069				
	07	80901-E0103	ASSY-FINISH FR DOOR LH #1375 #1392 #1374 #1429	1	1	SUPER		0969			
	08	80901-E3203	ASSY-FINISH FR DOOR LH #1375 #1392 #1374 #1429	1	1	SUPER CUSTOM	1069				
	09	80901-E0200	ASSY-FINISH FRONT DOOR LH #1373	1	1	SEDAN EXC STD		0969			
	10	80901-E3000	ASSY-FINISH FRONT DOOR LH #1373	1	1	P-DX	1069				

NOTE:

© 1972 NISSAN MOTOR CO., LTD.

REVISED: DECEMBER, 1972
PRINTED IN JAPAN

FRONT DOOR TRIMMING (SEDAN)

S	KEY NO.	PART NO.	DESCRIPTION	QTY	UNIT PKG FOR DIST.	APPLIED MODEL	APPLIED DATE FROM	APPLIED DATE UP TO	ICA N	ICA F	SUPERSEDED
	211	80901-E0201	ASSY-FINISH FRONT DOOR LH #1374	1	1	SEDAN EXC STD		0969			
	12	80901-E3001	ASSY-FINISH FRONT DOOR LH #1374	1	1	P-DX	1069				
	13	80901-E0202	ASSY-FINISH FRONT DOOR LH #1381	1	1	SEDAN EXC STD		0969			
	14	80901-E3002	ASSY-FINISH FRONT DOOR LH #1381	1	1	P-DX	1069				
	15	80901-E0203	ASSY-FINISH FRONT DOOR LH #1375	1	1	SEDAN EXC STD		0969			
	16	80901-E3003	ASSY-FINISH FRONT DOOR LH #1375	1	1	P-DX	1069				
	17	80901-E0204	ASSY-FINISH FRONT DOOR LH #1703	1	1	SEDAN EXC STD		0969			
	18	80901-E3004	ASSY-FINISH FRONT DOOR LH #1703	1	1	P-DX	1069				
	19	80901-E0301	ASSY-FINISH FRONT DOOR LH #1381 BLUE	1	1	STANDARD		0969			
	20	80901-E3401	ASSY-FINISH FRONT DOOR LH #1381 BLUE	1	1	STANDARD	1069				
	21	80901-E0300	ASSY-FINISH FRONT DOOR LH #1374 BROWN	1	1	STANDARD		0969			
	22	80901-E3400	ASSY-FINISH FRONT DOOR LH #1374 BROWN	1	1	STANDARD	1069				
	301	80919-32200	CLIP-FINISH DOOR	14	50	SEDAN					
	401	80929-32200	CAP-FINISH DOOR	14	50	SEDAN					
	501	80960-E0102	ASSY-WEATHERSTRIP FRONT DOOR RH	1	1	SEDAN					
	601	80961-E0102	ASSY-WEATHERSTRIP FRONT DOOR LH	1	1	SEDAN					

NOTE:

PRINTED IN JAPAN

© 1972 NISSAN MOTOR CO., LTD.

FRONT DOOR TRIMMING (SEDAN)

S	KEY NO.	PART NO.	DESCRIPTION	Q'TY	UNIT PKG FOR DIST.	APPLIED MODEL	APPLIED DATE FROM	APPLIED DATE UP TO	ICA N	ICA F	SUPERSEDED
	701	- 80970-E0102	GROMMET-LOCK KNOB	2	5	SEDAN					
	801	- 80940-E0100	ASSY-ARMREST FRONT DOOR RH	1	1	SEDAN					
	02	- 80940-E0110	ASSY-ARMREST FRONT DOOR RH (MITSUBOSHI)	1	1	SEDAN					
	901	- 80941-E0100	ASSY-ARMREST FRONT DOOR LH	1	1	SEDAN					
	02	- 80941-E0110	ASSY-ARMREST FRONT DOOR LH (MITSUBOSHI)	1	1	SEDAN					
	1001	- 80945-E0100	PLUG-HOLE ARMREST	4	10	SEDAN					
	02	- 80945-E0110	PLUG-HOLE ARMREST (MITSUBOSHI)	4	10	SEDAN					
	1101	- 77710-89912	SCREW-TAPPING	4	50	SEDAN					
	1201	- 00915-41010	WASHER-PLAIN	4	50	SEDAN					
	1301	- 00915-11010	WASHER-SPRING	4	50	SEDAN					
	1401	- 08963-10510	NUT-SPRING	4	50	SEDAN					

NOTE:

© 1972 NISSAN MOTOR CO., LTD.

REVISED: DECEMBER, 1972
PRINTED IN JAPAN

NOTE

Printed in Japan

NISSAN MOTOR CO., LTD.

REAR DOOR PANEL, GLASS & HINGE

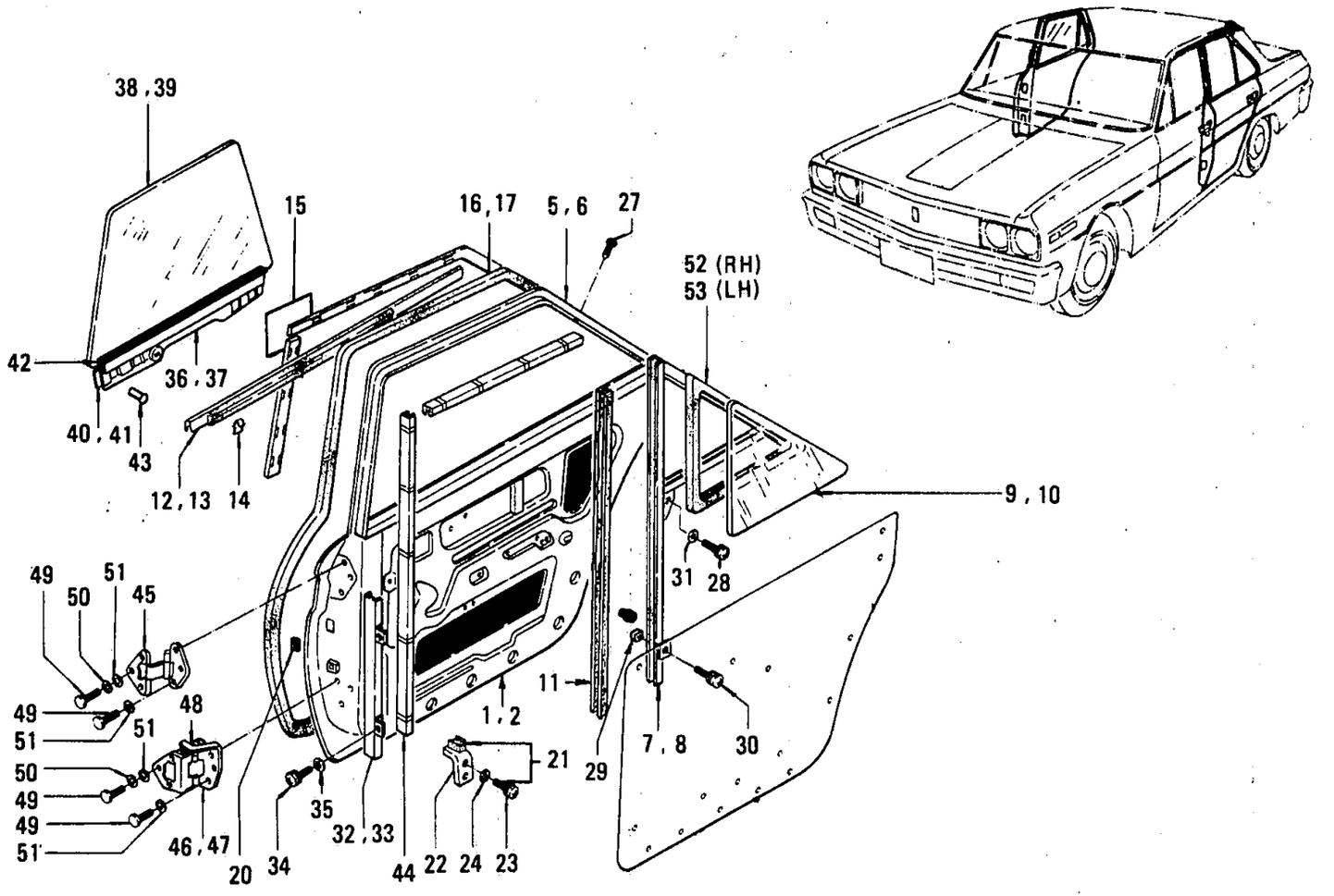

© 1972 NISSAN MOTOR CO., LTD.

REVISED: DECEMBER, 1972

PRINTED IN JAPAN

REAR DOOR PANEL, GLASS & HINGE

S	KEY NO.	PART NO.	DESCRIPTION	Q'TY	UNIT PKG FOR DIST.	APPLIED MODEL	APPLIED DATE FROM	APPLIED DATE UP TO	ICA N	ICA F	SUPERSEDED
	101	82100-E0130	ASSY-PANEL REAR DOOR RH	1	1	SEDAN					
	201	82101-E0130	ASSY-PANEL REAR DOOR LH	1	1	SEDAN					
	301	82192-E0130	PANEL-REAR DOOR OUTER RH	1	1	SEDAN					
	401	82193-E0130	PANEL-REAR DOOR OUTER LH	1	1	SEDAN					
	501	82210-E0100	ASSY-SASH REAR DOOR RH	1	1	SEDAN					
	601	82211-E0100	ASSY-SASH REAR DOOR LH	1	1	SEDAN					
	701	82202-E0100	ASSY-PARTITION REAR DOOR RH	1	1	SUPER CUSTOM DX					
	02	82202-E0300	ASSY-PARTITION REAR DOOR RH	1	1	PERSUNAL STD					
	801	82203-E0100	ASSY-PARTITION REAR DOOR LH	1	1	SUPER CUSTOM DX P-DX					
	02	82203-E0300	ASSY-PARTITION REAR DOOR LH	1	1	PERSUNAL STD					
	901	82255-E0100	GLASS-VENT REAR DOOR RH TINTED & TEMPERED 5.0T	1	1	SUPER DX CUSTOM P-DX					
	02	82255-E0300	GLASS-VENTILATOR REAR DOOR RH TEMPERED 5.0T	1	1	PERSONAL STD					
	1001	82256-E0100	GLASS-VENT REAR DOOR LH TINTED & TEMPERED 5.0T	1	1	SUPER DX CUSTOM P-DX					
	02	82256-E0300	GLASS-VENTILATOR REAR DOOR LH TEMPERED 5.0T	1	1	PERSONAL STD					
	1101	82338-E0100	RUBBER-GLASS RUN H	2	5	SEDAN					
	1201	82820-E0100	ASSY-MOULDING RH	1	1	SEDAN					
	1301	82821-E0100	ASSY-MOULDING LH	1	1	SEDAN					
	1401	80825-E0100	CLIP-MOULDING DOOR	10	10	SEDAN					
*	1501	80840-21000	COVER DRAIN HOLE	4	5	SEDAN			Y	Y	80840-21000
	02	80840-21001	COVER DRAIN HOLE	4	10	SEDAN			Y	Y	80840-21000

NOTE:

© 1972 NISSAN MOTOR CO., LTD.

PRINTED IN JAPAN

REAR DOOR PANEL, GLASS & HINGE

S	KEY NO.	PART NO.	DESCRIPTION	QTY	UNIT PKG FOR DIST.	APPLIED MODEL	APPLIED DATE FROM	APPLIED DATE UP TO	ICA N	ICA F	SUPERSEDED
	1601	82830-E0100	ASSY-WEATHERSTRIP REAR DOOR RH	1	1	SEDAN					
	1701	82831-E0100	ASSY-WEATHERSTRIP REAR DOOR LH	1	1	SEDAN					
	1801	82280-E0100	SET-COVER SASH REAR DOOR RH	1	1	SUPER CUSTOM					
	1901	82281-E0100	SET-COVER SASH REAR DOOR LH	1	1	SUPER CUSTOM					
	2001	76816-73000	GROMET-RUBBER	2	10	SEDAN					
	2101	80860-E0100	ASSY-GLASS STOPPER	2	1	SEDAN					
	2201	80317-E0199	CUSHION-WINDOW GLASS	2	5	SEDAN			C	N	80317-00800
	2301	00314-41214	SCREW-MACHINE WITH SELF LOCK WASER	8	50	SEDAN					
	2401	00915-41410	WASHER-PLAIN	8	50	SEDAN					
	2501	82869-E0100	BUMPER REAR DOOR	2	10	SEDAN					
	2601	80337-E0100	RUBBER-GLASS RUN C	1	5	SEDAN					
	2701	80294-73000	SCREW-TAPPING TYPE B FIX TO PANEL LOWER	6	10	SEDAN					
	2801	00314-41214	SCREW-MACHINE W/WASHER FIX PARTITION TO PANEL	2	50	SEDAN					
	2901	80298-73000	NUT-SPRING RETAINING FIX PAPTITION TO PANEL	2	10	SEDAN					
	3001	00314-44515	SCREW-MACHINE WITH SELF LOCK WASHER LOWER	2		SEDAN					
	3101	00915-51410	WASHER PLAIN LOWER	1	50	SEDAN					
	3201	82214-E0100	ASSY-SASH REAR DOOR LOWER LH	1	1	SEDAN					
	3301	82215-E0100	ASSY-SASH REAR DOOR LOWER LH	1	1	SEDAN					
	3401	00314-41214	SCREW-MACHINE W/WASHER FIX PANEL TO SASH LOWER	4	50	SEDAN					

NOTE:

© 1972 NISSAN MOTOR CO., LTD.

REVISED: DECEMBER, 1972
PRINTED IN JAPAN

REAR DOOR PANEL, GLASS & HINGE

S	KEY NO.	PART NO.	DESCRIPTION	Q'TY	UNIT PKG FOR DIST.	APPLIED MODEL	APPLIED DATE FROM	APPLIED DATE UP TO	ICA N	ICA F	SUPERSEDED
	3501	00915-51410	WASHER-PLAIN FIXING PANEL TO SASH LOWER	4	50	SEDAN					
	3601	82302-E0100	ASSY-CHANNEL REAR DOOR BOTTOM GLASS RH	1	1	SEDAN					
	3701	82303-E0100	ASSY-CHANNEL REAR DOOR BOTTOM GLASS LH	1	1	SEDAN					
	3801	82311-E0100	GLASS-WINDOW REAR DOOR RH TINTED & TEMPERED 5.0T	1	1	SUPER DX CUSTOM P-DX					
	02	82311-E0300	GLASS-WINDOW REAR DOOR RH TEMPERED 5.0T	1	1	PERSONAL STD					
	3901	82312-E0100	GLASS-WINDOW REAR DOOR LH TINTED & TEMPERED 5.0T	1	1	SUPER DX CUSTOM P-DX					
	02	82312-E0300	GLASS-WINDOW REAR DOOR LH TEMPERED 5.0T	1	1	PERSONAL STD					
	4001	82304-E0100	GUIDE-REAR DOOR WINDOW RH	1	5	SEDAN					
	4101	82305-E0100	GUIDE-REAR DOOR WINDOW LH	1	5	SEDAN					
	4201	80306-E0100	RUBBER-GLAZING FRONT DOOR WINDOW	2	5	SEDAN					
	4301	00660-40810	RIVET	6	50	SEDAN					
	4401	82335-E0100	RUBBER-GLASS RUN E	2	5	SEDAN					
	4501	82400-73000	ASSY-HINGE REAR DOOR UPPER	2	1	SEDAN					
●	4601	82420-E0100	ASSY-HINGE REAR DOOR LOWER RH	1		SEDAN					
●	02	82420-E3200	ASSY-HINGE REAR DOOR LOWER RH	1	1	SEDAN			Y	Y	82420-E0100
	03	80420-E3200	ASSY-HINGE REAR DOOR LOWER RH	1	1	SEDAN			Y	Y	82420-E3200
●	4701	82421-E0100	ASSY-HINGE REAR DOOR LOWER LH	1		SEDAN					

NOTE:

© 1972 NISSAN MOTOR CO., LTD.

PRINTED IN JAPAN

REAR DOOR PANEL, GLASS & HINGE

S	KEY NO.	PART NO.	DESCRIPTION	Q'TY	UNIT PKG FOR DIST.	APPLIED MODEL	APPLIED DATE FROM	APPLIED DATE UP TO	ICA N	ICA F	SUPERSEDED
*	4702	82421-E3200	ASSY-HINGE REAR DOOR LOWER LH	1	1	SEDAN			Y	Y	82421-E0100
	03	80421-E3200	ASSY-HINGE REAR DOOR LOWER LH	1	1	SEDAN			Y	Y	82421-E3200
	4801	80422-73001	SPRING-HINGE DOOR LOWER	2	5	SEDAN					
	4901	00144-52010	BOLT	24	50	SEDAN					
	5001	00915-11510	WASHER-LOCK SPRING	24	50	SEDAN					
	5101	00915-51510	WASHER-PLAIN	12	50	SEDAN					
	5201	H2202-E0101	RUBBER-GLASS RH	1	1	SEDAN					
	5301	H2203-E0101	RUBBER-GLASS LH	1	1	SEDAN					

NOTE:

© 1972 NISSAN MOTOR CO., LTD.

REVISED: DECEMBER, 1972
PRINTED IN JAPAN

NOTE

Printed in Japan

NISSAN MOTOR CO., LTD.

REAR DOOR LOCK, WINDOW REGULATOR & DOOR HANDLE (SEDAN)

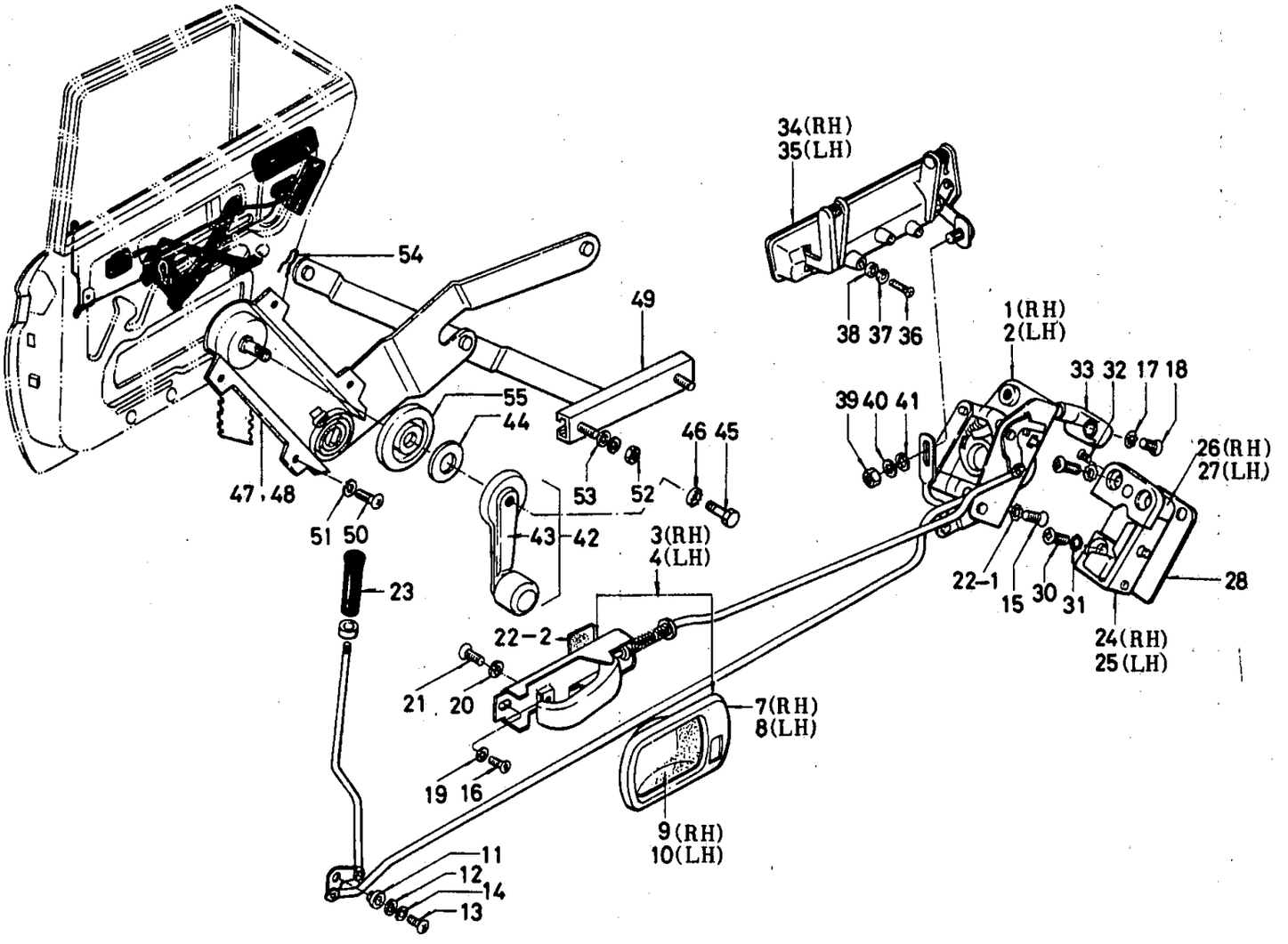

ILLUSTRATION **232**

© 1972 NISSAN MOTOR CO., LTD.

REVISED: DECEMBER, 1972

PRINTED IN JAPAN

REAR DOOR LOCK, WINDOW REGULATOR & DOOR HANDLE (SEDAN)

S	KEY NO.	PART NO.	DESCRIPTION	Q'TY	UNIT PKG FOR DIST.	APPLIED MODEL	APPLIED DATE FROM	APPLIED DATE UP TO	ICA N	ICA F	SUPERSEDED
	1D1	82502-E0101	ASSY-LOCK REAR DOOR RH	1	1	SEDAN			Y	Y	82502-E0100
	2D1	82503-E0101	ASSY-LOCK REAR DOOR LH	1	1	SEDAN			Y	Y	82503-E0100
	3D1	80504-E0100	ASSY-REMOTE CONTROL DOOR LOCK RH	1	1	SEDAN					
	4D1	80505-E0100	ASSY-REMOTE CONTROL DOOR LOCK LH	1	1	SEDAN					
	5D1	80599-E0100	COVER-DUST RH	1	1	SEDAN					
	6D1	80599-E0100	COVER-DUST LH	1	1	SEDAN					
	7D1	80512-E0100	ESCUTCHEON-REMOTE CONTROL RH	1	5	SEDAN		0969			
	D2	80512-E0101	ESCUTCHEON-REMOTE CONTROL RH	1	5	SEDAN			C	N	80512-E0100
	8D1	80513-E0100	ESCUTCHEON-RH LH	1	5	SEDAN		0969			
	D2	80513-E0101	ESCUTCHEON-REMOTE CONTROL LH	1	5	SEDAN			C	N	80513-E0100
	9D1	80517-E0100	COVER-REMOTE CONTROL RH	1	5	SEDAN					
	D2	80517-E0101	COVER-REMOTE CONTROL RH	1	5	SEDAN			C	N	80517-E0101
	10D1	80518-E0100	COVER-REMOTE CONTROL LH	1	5	SEDAN					
	D2	80518-E0101	COVER-REMOTE CONTROL LH	1	5	SEDAN			C	N	80518-E0100
	11D1	80515-E0101	COLLAR-BELL CRANK	2	10	SEDAN			Y	Y	80515-E0100
	12D1	08915-53610	WASHER-BELL CRANK	2	50	SEDAN					
	13D1	00314-41610	SCREW-MACHINE	2	50	SEDAN					
	14D1	00915-11410	SPRING-LOCK WASHER	2	50	SEDAN					
	15D1	00324-40810	SCREW-MACHINE FIXING LOCK TO DOOR	4	50	SEDAN					
	16D1	00324-42012	SCREW-MACHINE FIXING LOCK TO DOOR	4	50	SEDAN EXC AUTO SUPER & PERSONAL 2300					

NOTE:

© 1972 NISSAN MOTOR CO., LTD.

PRINTED IN JAPAN

REAR DOOR LOCK, WINDOW REGULATOR & DOOR HANDLE (SEDAN)

S	KEY NO.	PART NO.	DESCRIPTION	Q'TY	UNIT PKG FOR DIST.	APPLIED MODEL	APPLIED DATE FROM	APPLIED DATE UP TO	ICA N	ICA F	SUPERSEDED
	1701	00916-41410	WASHER-TOOTH FIXING LOCK TO DOOR	8	50	SEDAN					
*	1801	00414-40810	SCREW-MACHINE FIXING REMOTE CONTROL TO DOOR	4	50	SEDAN					
	02	00414-40812	SCREW-MACHINE FIXING REMOTE CONTROL TO DOOR	4	50	SEDAN			Y	N	00414-40810
	1901	00915-41410	WASHER-PLAIN FIXING REMOTE CONTROL TO DOOR	4	50	SEDAN					
	2001	00915-11410	WASHER-SPRING FIXING REMOTE CONTROL TO DOOR	4	50	SEDAN					
	2101	00420-80810	SCREW-MACHINE FIXING REMOTE CONTROL TO DOOR	2		SEDAN					
	2201	00916-40810	WASHER-TOOTH FIXING REMOTE CONTROL TO DOOR	2	50	SEDAN			Y	Y	80514-E0100
	02	80514-E0101	SLINGER-DOOR LOCK LINK	2	10	SEDAN		0969	Y	Y	80514-E0100
	2301	80595-78803	KNOB-DOOR LOCK L=10 CHROME COATING	2	10	SUPER CUSTOM DX					
	02	80595-73002	KNOB-DOOR LOCK L=15 CHROME COATING	2	10	SUPER CUSTOM DX					
	03	80595-78804	KNOB-DOOR L=15 CHROME COATING	2	10	SUPER CUSTOM DX			C	C	80596-73002
	04	80595-18402	KNOB-DOOR LOCK L=5 CHROME COATING	2	10	SUPER CUSTOM DX					
*	05	80595-21003	KNOB-DOOR LOCK L=10 BLACK	2	10	SEDAN EXC SUPER CUSTOM DELUXE					
	06	80595-N1600	KNOB-DOOR LOCK L=10 BLACK	2	5	SEDAN EXC SUPER CUSTOM DELUXE			C	N	80595-21003
*	07	80595-21004	KNOB-DOOR LOCK L=15 BLACK	2	10	SEDAN EXC SUPER CUSTOM DELUXE					
	08	80595-N1601	KNOB-DOOR L=15 BLACK	2	5	SEDAN EXC SUPER CUSTOM DELUXE			Y	N	80595-21004

NOTE:

© 1972 NISSAN MOTOR CO., LTD.

REVISED: DECEMBER, 1972
PRINTED IN JAPAN
C

REAR DOOR LOCK, WINDOW REGULATOR & DOOR HANDLE (SEDAN)

S	KEY NO.	PART NO.	DESCRIPTION	Q'TY	UNIT PKG FOR DIST.	APPLIED MODEL	APPLIED DATE FROM	APPLIED DATE UP TO	ICA N	ICA F	SUPERSEDED
*	2309	80595-21004	KNOB-DOOR LOCK L=5 BLACK	2	10	SEDAN EXC SUPER CUSTOM DELUXE					
	10	80595-N1601	KNOB-DOOR LOCK L=5 BLACK	2	5	SEDAN EXC SUPER CUSTOM DELUXE			Y	N	80595-21004
*	2401	80570-E0100	ASSY-STRIKER DOOR LOCK RH	1	1	SEDAN					
	02	80570-E0101	ASSY-STRIKER DOOR LOCK RH	1	1	SEDAN			Y	N	80570-E0100
*	2501	80571-E0100	ASSY-STRIKER DOOR LOCK LH	1	1	SEDAN					
	02	80571-E0101	ASSY-STRIKER DOOR LH	1	1	SEDAN			Y	N	80571-E0100
*	2601	82576-E0100	COVER-STRIKER RH	1	5	SEDAN					
*	02	82576-E0101	COVER-STRIKER RH	1	5	SEDAN			Y	N	82576-E0100
	03	82576-F0800	COVER-STRIKER RH	1	5	SEDAN			Y	N	82576-E0101
*	2701	82577-E0100	COVER-STRIKER	1	5	SEDAN					
*	02	82577-E0101	COVER STRIKER	1	5	SEDAN			Y	N	82577-E0100
	03	82577-F0800	COVER-STRIKER	1	5	SEDAN			Y	N	82577-E0101
	2801	80575-E0100	SHIM-STRIKER	AR	5	SEDAN					
	2901	00324-53010	SCREW-MACHINE TO ATTACH STRIKER TO PILLAR	8	50	SEDAN					
	3001	00324-51210	SCREW-MACHINE TO ATTACH STRIKER TO PILLAR	4	50	SEDAN					
	3101	00916-41510	WASHER-TOOTH TO ATTACH STRIKER TO PILLAR	12	50	SEDAN					
*	3201	08310-30610	SCREW-MACHINE	2	50	SEDAN					
	02	08310-30612	SCREW-MACHINE	2	50	SEDAN			Y	N	08310-30610
*	3301	80572-E0100	GUIDE-STRIKER	2	5	SEDAN					
	02	80572-E0101	GUIDE-STRIKER	2	10	SEDAN			Y	N	80572-E0100

NOTE:

C

PRINTED IN JAPAN

© 1972 NISSAN MOTOR CO., LTD.

REAR DOOR LOCK, WINDOW REGULATOR & DOOR HANDLE (SEDAN)

S	KEY NO.	PART NO.	DESCRIPTION	Q'TY	UNIT PKG FOR DIST.	APPLIED MODEL	APPLIED DATE FROM	APPLIED DATE UP TO	ICA N	ICA F	SUPERSEDED
	34D1	82605-E0100	ASSY-HANDLE DOOR OUT SIDE REAR RH	1	1	SEDAN					
	35D1	82606-E0100	ASSY-HANDLE DOOR OUT SIDE REAR LH	1	1	SEDAN					
	36D1	00314-01214	SCREW-MACHINE HANDLE TO DOOR	6	50	SEDAN					
	37D1	00915-11010	WASHER-SPRING HANDLE TO DOOR	6	50	SEDAN					
	38D1	00915-41010	WASHER-PLAIN HANDLE TO DOOR	6	50	SEDAN					
	39D1	00911-14010	NUT	2	50	SEDAN					
	40D1	00915-11010	WASHER-SPRING	2	50	SEDAN					
	41D1	00915-41010	WASHER-PLAIN	2	50	SEDAN					
	42D1	80760-E0100	ASSY-HANDLE DOOR WINDOW REGULATOR	2	1	SEDAN					
	43D1	80764-E0100	COVER-HANDLE DOOR WINDOW REGULATOR	2	10	SEDAN					
	44D1	80763-E0101	WASHER-SEATING HANDLE	1	10	SEDAN			Y	Y	80763-E0100
*	45D1	00424-01210	SCREW-MACHINE POINTED	2	50	SEDAN					
	02	00424-01212	SCREW-MACHINE POINTED	2	50	SEDAN			Y	N	00424-01210
	46D1	00916-41010	WASHER-TOOTH OUTERNAL	2	50	SEDAN					
	47D1	82700-E0100	ASSY-REGULATOR DOOR WINDOW REAR RH	1	1	SEDAN					
	48D1	82701-E0100	ASSY-REGULATOR DOOR WINDOW REAR LH	1	1	SEDAN					
	49D1	80710-E0100	ASSY-GUIDE DOOR WINDOW REGULATOR	2	5	SEDAN					
	50D1	00314-41214	SCREW-MACHINE	8	50	SEDAN					
	51D1	00915-11410	WASHER-SPRING	12	50	SEDAN					

NOTE:

© 1972 NISSAN MOTOR CO., LTD.

REVISED: DECEMBER, 1972
PRINTED IN JAPAN
C

REAR DOOR LOCK, WINDOW REGULATOR & DOOR HANDLE (SEDAN)

S	KEY NO.	PART NO.	DESCRIPTION	Q'TY	UNIT PKG FOR DIST.	APPLIED MODEL	APPLIED DATE FROM	APPLIED DATE UP TO	ICA N	ICA F	SUPERSEDED
	5201	00911-34410	NUT	4	50	SEDAN					
	5301	00915-41410	WASHER-PLAIN	4	50	SEDAN					
	5401	82727-E0100	SPRING-RETAINER DOOR WINDOW REGULATOR ARM	2	10	SEDAN					
	5501	82728-65000	WASHER-DOOR WINDOW REGULATOR ARM	2	10	SEDAN					

NOTE:

© 1972 NISSAN MOTOR CO., LTD.

PRINTED IN JAPAN

NOTE

NISSAN MOTOR CO., LTD.

Printed in Japan

NOTE

Printed in Japan

NISSAN MOTOR CO., LTD.

REAR DOOR TRIMMING (SEDAN)

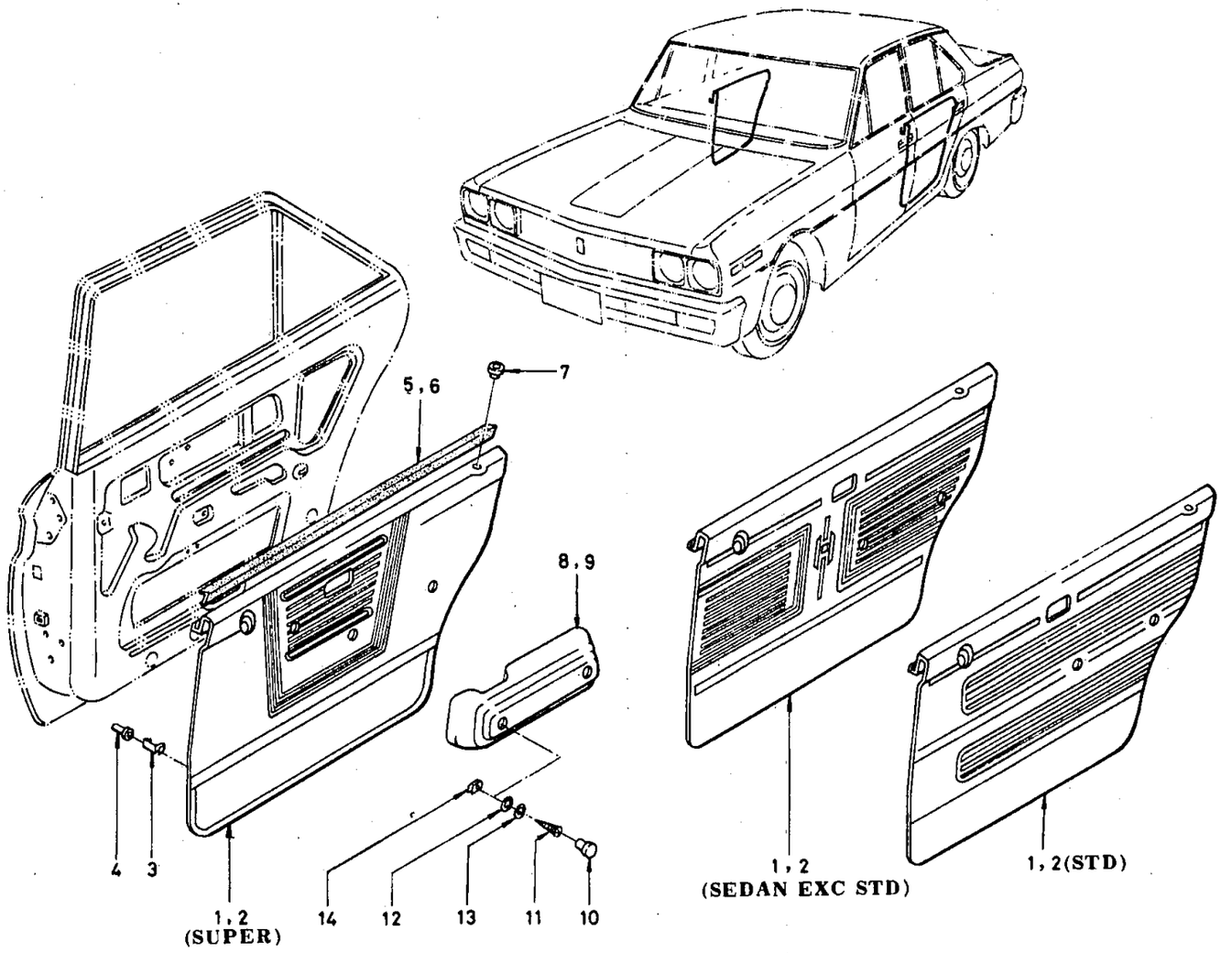

© 1972 NISSAN MOTOR CO., LTD.

REVISED: DECEMBER, 1972

PRINTED IN JAPAN

C

REAR DOOR FINISH (SEDAN)

SUPER

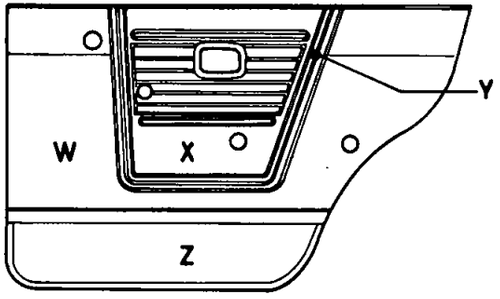

SEDAN(EXC STD)

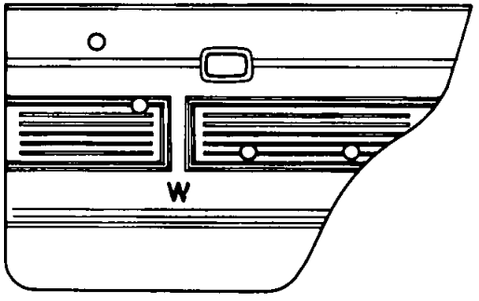

STANDARD

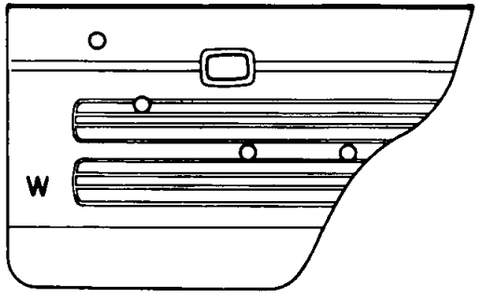

SUPER

KEY NO.	PART NO.	X COLLOR	X COLLOR NO.	Y COLLOR	Y COLLOR NO.	Z COLLOR	Z COLLOR NO.	W COLLOR	W COLLOR NO.
1-01 2-01	82900 E0100 82901 E0100	RED	$1381	RED	$1393	RED	$1447	RED	$1373
1-02 2-02	82900 E0101 82901 E0101	BLACK	$1390	BLACK	$1375	BLACK	$1436	BLACK	$1374
1-03 2-03	82900 E0102 82901 E0102	BROWN	$1391	BROWN	$1394	BROWN	$1449	BROWN	$1381
1-04 2-04	82900 E0103 82901 E0103	GRAY	$1392	GRAY	$1374	GRAY	$1439	GRAY	$1375

SEDAN (EXC STD)

KEY NO.	PART NO.	W COLLOR	W COLLOR NO.						
1-05 2-05	82900 E0200 82901 E0200	RED	$1373						
1-06 2-06	82900 E0201 82901 E0201	BLACK	$1374						
1-07 2-07	82900 E0202 82901 E0202	BROWN	$1381						
1-08 2-08	82900 E0203 82901 E0203	GRAY	$1375						
1-09 2-09	82900 E0204 82900 E0204	BLUE	$1703						

STANDARD

KEY NO.	PART NO.	W COLLOR	W COLLOR NO.						
1-10 2-10	82900 E0300 82901 E0300	BROWN	$1381						
1-11 2-11	82900 E0301 82901 E0301	BLACK	$1374						

REVISED: DECEMBER, 1972

© 1972 NISSAN MOTOR CO., LTD.

PRINTED IN JAPAN

REAR DOOR TRIMMING (SEDAN)

S	KEY NO.	PART NO.	DESCRIPTION	QTY	UNIT PKG FOR DIST.	APPLIED MODEL	APPLIED DATE FROM	APPLIED DATE UP TO	ICA N	ICA F	SUPERSEDED
	101	82900-E0100	ASSY-FINISH REAR DOOR RH	1	1	SUPER CUSTOM					
	02	82900-E0101	ASSY-FINISH REAR DOOR RH	1	1	SUPER CUSTOM					
	03	82900-E0102	ASSY-FINISH REAR DOOR RH	1	1	SUPER CUSTOM					
	04	82900-E0103	ASSY-FINISH REAR DOOR RH	1	1	SUPER CUSTOM					
	05	82900-E0200	ASSY-FINISH REAR DOOR RH	1	1	DELUXE PERSONAL P-DX					
	06	82900-E0201	ASSY-FINISH REAR DOOR RH	1	1	DELUXE PERSONAL P-DX					
	07	82900-E0202	ASSY-FINISH REAR DOOR RH	1	1	DELUXE PERSONAL P-DX					
	08	82900-E0203	ASSY-FINISH REAR DOOR RH	1	1	DELUXE PERSONAL P-DX					
	09	82900-E0204	ASSY-FINISH REAR DOOR RH	1	1	DELUXE PERSONAL P-DX					
	10	82900-E0300	ASSY-FINISH REAR DOOR RH	1	1	PERSONAL STD DIESEL					
	11	82900-E0301	ASSY-FINISH REAR DOOR RH	1	1	STD DIESEL					
	201	82901-E0100	ASSY-FINISH REAR DOOR LH	1	1	SUPER CUSTOM					
	02	82901-E0101	ASSY-FINISH REAR DOOR LH	1	1	SUPER CUSTOM					
	03	82901-E0102	ASSY-FINISH REAR DOOR LH	1	1	SUPER CUSTOM					
	04	82901-E0103	ASSY-FINISH REAR DOOR LH	1	1	SUPER CUSTOM					
	05	82901-E0200	ASSY-FINISH REAR DOOR LH	1	1	DELUXE PERSONAL P-DX					
	06	82901-E0201	ASSY-FINISH REAR DOOR LH	1	1	DELUXE PERSONAL P-DX					
	07	82901-E0202	ASSY-FINISH REAR DOOR LH	1	1	DELUXE PERSONAL P-DX					

NOTE:

© 1972 NISSAN MOTOR CO., LTD.

REVISED: DECEMBER, 1972
PRINTED IN JAPAN

REAR DOOR TRIMMING (SEDAN)

S	KEY NO.	PART NO.	DESCRIPTION	QTY	UNIT PKG FOR DIST.	APPLIED MODEL	APPLIED DATE FROM	APPLIED DATE UP TO	ICA N	ICA F	SUPERSEDED
	208	- 82901-E0203	ASSY-FINISH REAR DOOR LH	1	1	DELUXE PERSONAL P-DX					
	09	- 82901-E0204	ASSY-FINISH REAR DOOR LH	1	1	DELUXE PERSONAL P-DX					
	10	- 82901-E0300	ASSY-FINISH REAR DOOR LH	1	1	PERSONAL STD DIESEL					
	11	- 82901-E0301	ASSY-FINISH REAR DOOR LH	1	1	STD DIESEL					
	301	- 80919-32200	CLIP-FINISH DOOR	10	50	SEDAN					
	401	- 80929-32200	CAP-FINISH DOOR	10	50	SEDAN					
	501	- 82960-E0102	ASSY-WEATHER STRIP REAR DOOR RH	1	1	SEDAN					
	601	- 82961-E0102	ASSY-WEATHER STRIP REAR DOOR LH	1	1	SEDAN					
	701	- 80970-E0102	GROMMET-LOCK KNOB	2	5	SEDAN		0969	Y	Y	80970-E0101
	02	- 80970-69000	GROMMET-LOCK KNOB	2	10	SEDAN	1069				
	801	- 82940-E0100	ASSY-ARMREST REAR DOOR RH	1	1	SEDAN					
	02	- 80940-E0110	ASSY-ARMREST REAR DOOR RH (MITSUBOSHI)	1	1	SEDAN					
	901	- 82941-E0100	ASSY-ARMREST REAR DOOR LH	1	1	SEDAN					
	02	- 80941-E0110	ASSY-ARMREST REAR DOOR LH (MITSUBOSHI)	1	1	SEDAN					
	1001	- 80945-E0100	PLUG-HOLE ARMREST	4	10	SEDAN					
	02	- 80945-E0110	PLUG-HOLE ARMREST (MITSUBOSHI)	4	10	SEDAN					
	1101	- 77710-89912	SCREW-TAPPING #10X45	4	50	SEDAN					
	1201	- 00915-41010	WASHER-PLAIN #10	4	50	SEDAN					
	1301	- 00915-11010	WASHER-SPRING LOCK	4	50	SEDAN					

NOTE:

© 1972 NISSAN MOTOR CO., LTD.

PRINTED IN JAPAN

REAR DOOR TRIMMING (SEDAN)

S	KEY NO.	PART NO.	DESCRIPTION	QTY	UNIT PKG FOR DIST.	APPLIED MODEL	APPLIED DATE FROM	APPLIED DATE UP TO	ICA N	ICA F	SUPERSEDED
	1401	08963-10510	NUT-SPRING TYPE A	4	50	SEDAN					

NOTE:

© 1972 NISSAN MOTOR CO., LTD.

REVISED: DECEMBER, 1972

PRINTED IN JAPAN

NOTE

Printed in Japan

NISSAN MOTOR CO., LTD.

TRUNK & REAR BUMPER (SEDAN)

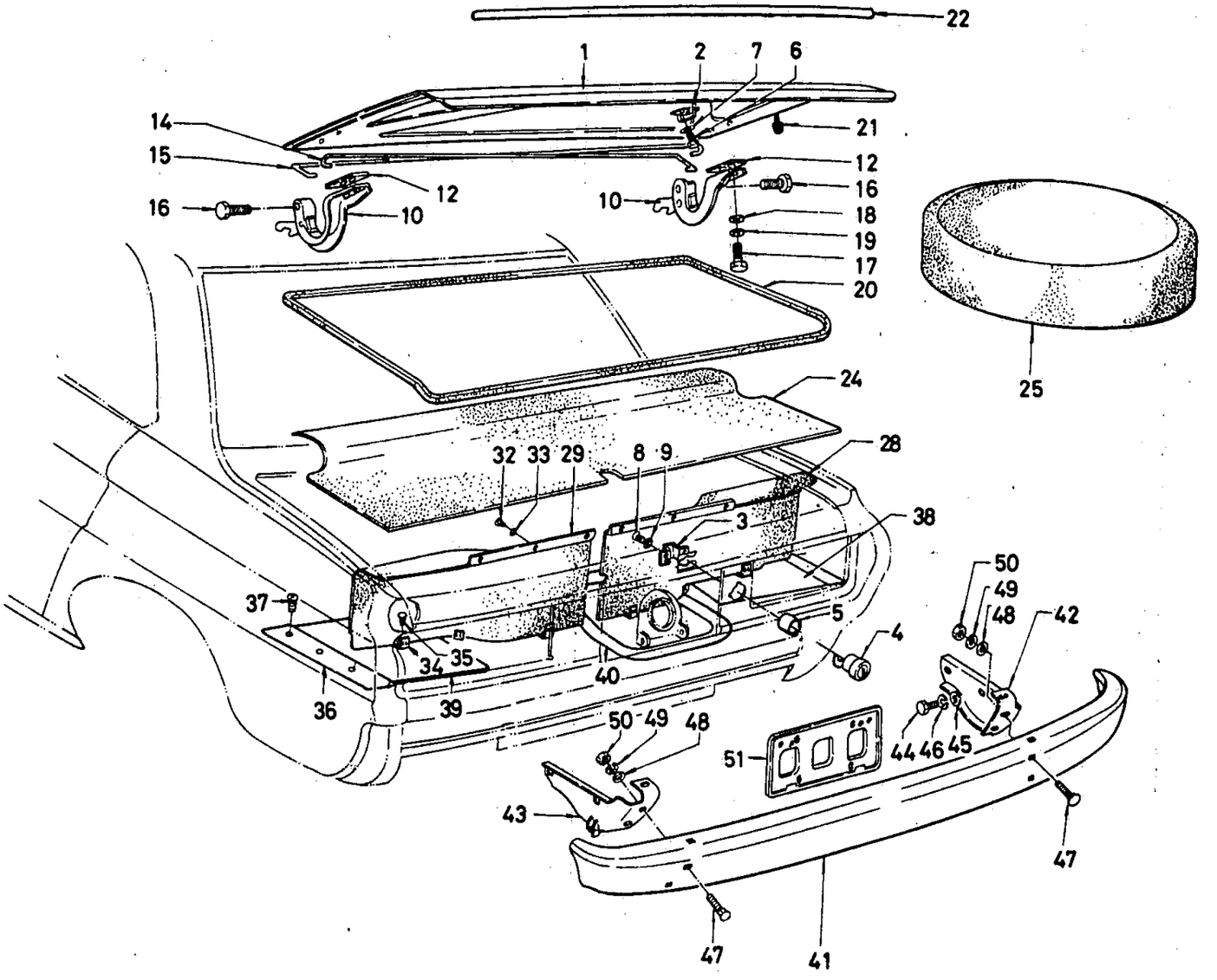

© 1972 NISSAN MOTOR CO., LTD.

REVISED: DECEMBER, 1972

PRINTED IN JAPAN

TRUNK & REAR BUMPER (SEDAN)

S	KEY NO.	PART NO.	DESCRIPTION	Q'TY	UNIT PKG FOR DIST.	APPLIED MODEL	APPLIED DATE FROM	APPLIED DATE UP TO	ICA N	ICA F	SUPERSEDED
	101	84300-E0730	ASSY-TRUNK LID	1	1	SEDAN					
	201	84420-73000	ASSY-STRIKER TRUNK LID LOCK	1	1	SEDAN					
	301	84430-E0100	ASSY-LOCK TRANK LID	1	1	SEDAN					
	401	84460-E0100	ASSY-CYLINDER LOCK TRUNK LID	1	1	SEDAN					
	501	84465-78000	ASSY-CONDUIT PIPE	1	2	SEDAN					
	601	00314-41660	SCREW-MACHINE	2		SEDAN					
	701	00915-41410	WASHER PLAIN	2	50	SEDAN					
	801	00314-01214	SCREW-MACHINE	4	50	SEDAN					
	901	00915-41010	WASHER PLAIN	4	50	SEDAN					
*	1001	84510-69001	ASSY-HINGE TRUNK LID	2	1	SEDAN					
	02	84510-P0100	ASSY-HINGE TRUNK LID	2	1	SEDAN			Y	N	84510-69001
*	1101	84541-69000	BUMPER-RUBBER TRUNK LID HINGE	2	5	SEDAN					
	02	84541-P0100	BUMPER-RUBBER TRUNK LID HINGE	2	5	SEDAN			Y	N	84541-69000
	1201	84518-73000	SHIM-TRUNK LID HINGE	AR	10	SEDAN					
	02	84518-69000	SHIM-TRUNK LID HINGE	AR	10	SEDAN					
	1301	84521-69001	ASSY-BRACKET TRUNK LID HINGE	2	1	SEDAN					
	1401	84532-69050	BAR-TORSION TRUNK LID HINGE RH	1	1	SEDAN					
	1501	84533-69000	BAR-TORSION TRUNK LID HINGE LH	1	1	SEDAN					
	1601	84535-73000	PIN-HINGE TRUNK LID	2	10	SEDAN					
	1701	00144-52010	BOLT	4	50	SEDAN					
	1801	00915-41510	WASHER-PLAIN	4	50	SEDAN					

NOTE:

© 1972 NISSAN MOTOR CO., LTD.

PRINTED IN JAPAN

TRUNK & REAR BUMPER (SEDAN)

S	KEY NO.	PART NO.	DESCRIPTION	Q'TY	UNIT PKG FOR DIST.	APPLIED MODEL	APPLIED DATE FROM	APPLIED DATE UP TO	ICA N	ICA F	SUPERSEDED
	1901	00915-11510	WASHER-LOCK SPRING	4	50	SEDAN					
	2001	84806-69000	WEATHERSTRIP-TRUNK LID	1	1	SEDAN					
	2101	84807-E0100	BUMPER-RUBBER TRUNK LID	2	10	SEDAN					
	2201	84831-E0100	MOULDING-TRUNK LID	1	1	SEDAN					
	2301	84832-E0100	BOLT-MOULDING FIX	1	10	SEDAN					
	2401	84902-E0200	MAT-TRUNK FLOOR	1	1	SEDAN EXC SUPER		0969			
	02	84902-E0200	MAT-TRUNK FLOOR	1	1	P-DX STD	1069				
	03	84902-E0601	MAT-TRUNK FLOOR	1	1	SUPER		0969			
	04	84902-E3000	MAT-TRUNK FLOOR	1	1	SUPER CUSTOM	1069				
	05	84902-E0900	MAT-TRUNK FLOOR	1	1	OP DIESEL RD		0969			
	2501	84950-69000	COVER-SPARE TIRE #1437	1	1	SUPER		0969			
	02	84950-E3200	COVER-SPARE TIRE #1437	1	1	SUPER CUSTOM	1069				
	2601	84952-69000	FINISH-REAR WHEEL HOUSE RH	1	1	SUPER		0969			
	02	84952-E3200	FINISH-REAR WHEEL HOUSE RH	1	1	SUPER CUSTOM	1069				
*	2701	84953-69000	FINISH-REAR WHEEL HOUSE LH	1	1	SUPER		0969			
	02	84952-E3200	FINISH-REAR WHEEL HOUSE LH	1	1	SUPER CUSTOM	1069				
	2801	84941-E0101	FINISH-TRUNK REAR RH	1	1	SUPER		0969			
	02	84941-E3200	FINISH-TRUNK REAR RH	1	1	SUPER CUSTOM	1069				
	2901	84942-E0101	FINISH-TRUNK REAR LH	1	1	DX SUPER		0969			
	02	84942-E3200	FINISH-TRUNK REAR LH	1	1	SUPER CUSTOM	1069				
	3001	84946-E0101	ASSY-FINISH TRUNK REAR RH	1	1	SUPER CUSTOM	1069				
	3101	84947-E0101	ASSY-FINISH TRUNK REAR LH	1	1	SUPER CUSTOM	1069				
	3201	00530-81010	SCREW-TAPPING	6		DX SUPER CUSTOM					

NOTE:

© 1972 NISSAN MOTOR CO., LTD.

REVISED: DECEMBER, 1972
PRINTED IN JAPAN

TRUNK & REAR BUMPER (SEDAN)

S	KEY NO.	PART NO.	DESCRIPTION	Q'TY	UNIT PKG FOR DIST.	APPLIED MODEL	APPLIED DATE FROM	APPLIED DATE UP TO	ICA N	ICA F	SUPERSEDED
	3301	00915-80820	WASHER-FINISH	6	50	DX SUPER CUSTOM					
	3401	96706-B0700	GROMMET #8	6	10	DX SUPER CUSTOM					
	3501	00513-81310	SCREW-MACHINE	6		DX SUPER CUSTOM					
	3601	84921-E0100	BOARD-TRUNK FLOOR SIDE LH	1	1	SUPER CUSTOM					
	02	84921-E0300	BOARD-TRUNK FLOOR SIDE LH	1	1	SEDAN EXC SUPER CUSTOM					
*	3701	00510-81310	SCREW-TAPPING	6	50	SEDAN					
	02	00510-81312	SCREW-TAPPING	6	50	SEDAN		0969	Y	N	00510-81310
	3801	84911-E0100	INSULATOR-TRUNK FLOOR RH	1	1	SEDAN					
	3901	84912-E0100	INSULATOR TRUNK FLOOR LH	1	1	SEDAN					
	4001	84913-E0100	BORRD ASPH FUEL TANK	1	1	SEDAN					
	4101	85011-E0101	BUMPER-REAR	1	1	SEDAN					
	4201	85210-E0101	ASSY-STAY REAR BUMPER RH	1	1	SEDAN					
	4301	85211-E0101	ASSY-STAY REAR BUMPER LH	1	1	SEDAN					
	4401	00154-83010	BOLT	4	10	SEDAN					
	4501	00915-51810	WASHER-PLAIN	4	50	SEDAN					
	4601	00915-21810	SPRING-LOCK WASHER	4	50	SEDAN					
	4701	62666-73000	ASSY-BOLT BUMPER	6	10	SEDAN					
	4801	00915-51510	WASHER-PLAIN	6	50	SEDAN					
	4901	00915-21510	SPRING-LOCK WASHER	6	50	SEDAN					
	5001	00911-24510	NUT	6	50	SEDAN					
	5101	96200-E0150	COMP-REAR LICENCE PLATE BRACKET	1	1	SEDAN					
	5201	96215-73000	SPRING-REAR LICENCE PLATE BRACKET	2	10	SEDAN					

NOTE:

© 1972 NISSAN MOTOR CO., LTD.

PRINTED IN JAPAN

TRUNK & REAR BUMPER (SEDAN)

S	KEY NO.	PART NO.	DESCRIPTION	Q'TY	UNIT PKG FOR DIST.	APPLIED MODEL	APPLIED DATE FROM	APPLIED DATE UP TO	ICA N	ICA F	SUPERSEDED
	5301	80292-73000	RIVET-SPECIAL	2	10	SEDAN					

NOTE:

© 1972 NISSAN MOTOR CO., LTD.

REVISED: DECEMBER, 1972

PRINTED IN JAPAN

C

NOTE

Printed in Japan

NISSAN MOTOR CO., LTD.

FRONT SEAT & SLIDE (1) -SEMI SEPARATE TYPE-

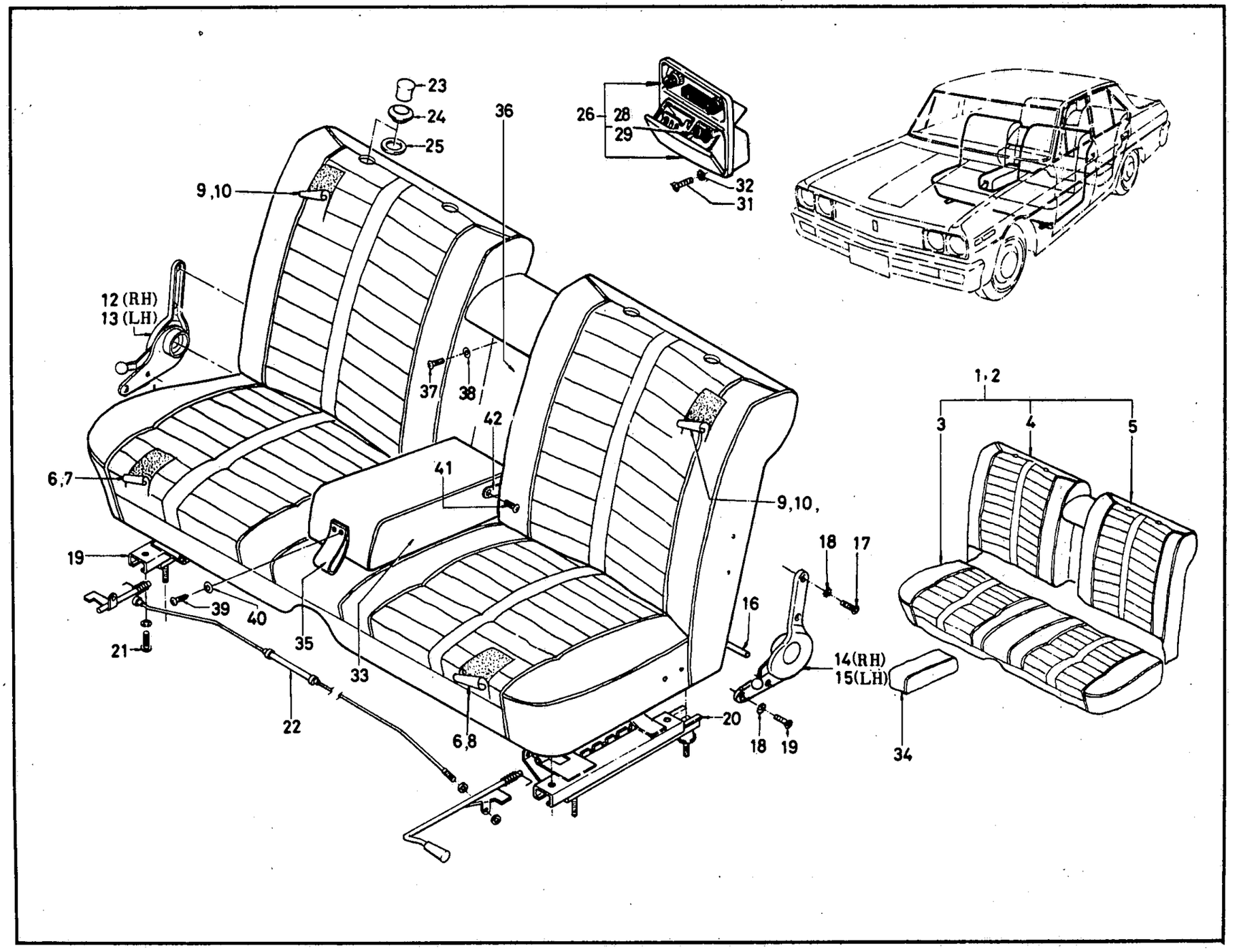

ILLUSTRATION **235**

© 1972 NISSAN MOTOR CO., LTD.

REVISED: DECEMBER, 1972

PRINTED IN JAPAN

FRONT SEAT & SLIDE (1) -SEMI SEPARATE TYPE-

S	KEY NO.	PART NO.	DESCRIPTION	Q'TY	UNIT PKG FOR DIST.	APPLIED MODEL	APPLIED DATE FROM	APPLIED DATE UP TO	ICA N	ICA F	SUPERSEDED
	101	86000-E0200	ASSY-FRONT SEAT COMP RED SEMI SEPARATE TYPE	1	1	SUPER DELUXE RD		0969			
	02	86000-E1200	ASSY-FRONT SEAT COMP RED SEMI SEPARATE TYPE	1	1	SUPER DELUXE LD		0969			
	03	86000-E0201	ASSY-FRONT SEAT COMP BLACK SEMI SEPARATE TYPE	1	1	SUPER DELUXE RD		0969			
	04	86000-E1201	ASSY-FRONT SEAT COMP BLACK SEMI SEPARATE TYPE	1	1	SUPER DELUXE LD		0969			
	05	86000-E0203	ASSY-FRONT SEAT COMP BROWN SEMI SEPARATE TYPE	1	1	SUPER DELUXE RD		0969			
	06	86000-E1203	ASSY-FRONT SEAT COMP GRAY SEMI SEPARATE TYPE	1	1	SUPER DELUXE LD		0969			
	201	86000-E3100	ASSY-FRONT SEAT COMP RED SEMI SEPARATE TYPE	1		SUPER R DRIVE	1069				
	02	86000-E3300	ASSY-FRONT SEAT COMP RED SEMI SEPARATE TYPE	1		SUPER L DRIVE	1069				
	03	86000-E3101	ASSY-FRONT SEAT COMP BLACK SEMI SEPARATE TYPE	1		SUPER R DRIVE	1069				
	04	86000-E3301	ASSY-FRONT SEAT COMP BLACK SEMI SEPARATE TYPE	1		SUPER L DRIVE					
	05	86000-E3102	ASSY-FRONT SEAT COMP GRAY SEMI SEPARATE TYPE	1		DELUXE RD	1069				
	06	86000-E3302	ASSY-FRONT SEAT COMP GRAY SEMI SEPARATE TYPE	1		DELUXE LD	1069				
	07	86000-E3103	ASSY-FRONT SEAT COMP BROWN SEMI SEPARATE TYPE	1		SUPER R DRIVE	1069				
	08	86000-E3303	ASSY-FRONT SEAT COMP GRAY SEMI SEPARATE TYPE	1		SUPER L DRIVE	1069				
	301	86300-E3100	ASSY-CUSHION FR SEAT RED SEMI SEPARATE TYPE	1		SUPER	1069				

NOTE:

PRINTED IN JAPAN

REVISED: DECEMBER, 1972

© 1972 NISSAN MOTOR CO., LTD.

FRONT SEAT & SLIDE (1) -SEMI SEPARATE TYPE-

S	KEY NO.	PART NO.	DESCRIPTION	Q'TY	UNIT PKG FOR DIST.	APPLIED MODEL	APPLIED DATE FROM	APPLIED DATE UP TO	ICA N	ICA F	SUPERSEDED
	302	86300-E3101	ASSY-CUSHION FR SEAT BLACK SEMI SEPARATE TYPE	1		SUPER	1069				
	03	86300-E3102	ASSY-CUSHION FR SEAT GRAY SEMI SEPARATE TYPE	1		DELUXE		0969			
	04	86300-E3103	ASSY-CUSHION FR SEAT BROWN SEMI SEPARATE TYPE	1		SUPER	1069				
	401	87600-E3100	ASSY-BACK DRIVER SEAT RED SEMI SEPARATE TYPE	1		SUPER	1069				
	02	87600-E3101	ASSY-BACK DRIVER SEAT BLACK SEMI SEPARATE TYPE	1		SUPER	1069				
	03	87600-E3102	ASSY-BACK DRIVER SEAT GRAY SEMI SEPARATE TYPE	1		DELUXE		0969			
	04	87600-E3103	ASSY-BACK DRIVER SEAT BROWN SEMI SEPARATE TYPE	1		SUPER	1069				
	501	87650-E3100	ASSY-BACK ASSIST SEAT RED SEMI SEPARATE TYPE	1		SUPER	1069				
	02	87650-E3101	ASSY-BACK ASSIST SEAT BLACK SEMI SEPARATE TYPE	1		SUPER	1069				
	03	87650-E3102	ASSY-BACK ASSIST SEAT GRAY SEMI SEPARATE TYPE	1		DELUXE		0969			
	04	87650-E3103	ASSY-BACK ASSIST SEAT BROWN SEMI SEPARATE TYPE	1		SUPER	1069				
	601	86320-E0200	ASSY-TRIM FRONT SEAT CUSHION RED	1	1	DELUXE SUPER		0969			
	02	86320-E0201	ASSY-TRIM FRONT SEAT CUSHION BLACK	1	1	DELUXE SUPER		0969			
	03	86320-E0203	ASSY-TRIM FRONT SEAT BROWN	1	1	DELUXE SUPER		0969			
	701	86320-E3100	ASSY-TRIM DRIVER SEAT CUSHION RED	1	1	SUPER	1069				
	02	86320-E3101	ASSY-TRIM DRIVER SEAT CUSHION BLACK	1	1	SUPER	1069				

NOTE:

© 1972 NISSAN MOTOR CO., LTD.

REVISED: DECEMBER, 1972

PRINTED IN JAPAN

C

FRONT SEAT & SLIDE (1) -SEMI SEPARATE TYPE-

S	KEY NO.	PART NO.	DESCRIPTION	Q'TY	UNIT PKG FOR DIST.	APPLIED MODEL	APPLIED DATE FROM	APPLIED DATE UP TO	ICA N	ICA F	SUPERSEDED
	703	86320-E3102	ASSY-TRIM DRIVER SEAT CUSHION GRAY	1		DELUXE		0969			
	04	86320-E3103	ASSY-TRIM DRIVER SEAT CUSHION BROWN	1	1	SUPER	1009				
	801	86370-E3100	ASSY-TRIM ASSIST SEAT CUSHION RED	1	1	SUPER	1069				
	02	86370-E3101	ASSY-TRIM ASSIST SEAT CUSHION BLACK	1	1	SUPER	1069				
	03	86370-E3102	ASSY-TRIM ASSIST SEAT CUSHION GRAY	1		DELUXE		0969			
	04	86370-E3103	ASSY-TRIM ASSIST SEAT CUSHION BROWN	1	1	SUPER	1069				
	901	86620-E0200	ASSY-TRIM FRONT SEAT BACK RED	1	1	DELUXE SUPER		0969			
	02	86620-E0201	ASSY-TRIM FRONT SEAT BACK BLACK	1	1	DELUXE SUPER		0969			
	03	86620-E0203	ASSY-TRIM FRONT SEAT BACK BROWN	1	1	DELUXE SUPER		0969			
	1001	87620-E3100	ASSY-TRIM FRONT SEAT BACK RED	1	1	SUPER	1069				
	02	87620-E3101	ASSY-TRIM FRONT SEAT BACK BLACK	1	1	SUPER	1069				
	03	87620-E3102	ASSY-TRIM FRONT SEAT BACK GRAY	1		DELUXE		0969			
	04	87620-E3103	ASSY-TRIM FRONT SEAT BACK BROWN	1	1	SUPER	1069				
	1101	87670-E3100	ASSY-TRIM ASSIST SEAT BACK RED	1	1	SUPER	1069				
	02	87670-E3101	ASSY-TRIM ASSIST SEAT BACK BLACK	1		SUPER	1069				

NOTE:

REVISED: DECEMBER, 1972

© 1972 NISSAN MOTOR CO., LTD.

PRINTED IN JAPAN

FRONT SEAT & SLIDE (1) -SEMI SEPARATE TYPE-

S	KEY NO.	PART NO.	DESCRIPTION	Q'TY	UNIT PKG FOR DIST.	APPLIED MODEL	APPLIED DATE FROM	APPLIED DATE UP TO	ICA N	ICA F	SUPERSEDED
	1103	87670-E3102	ASSY-TRIM ASSIST SEAT BACK GRAY	1		DELUXE		0969			
	04	87670-E3103	ASSY-TRIM ASSIST SEAT BACK BROWN	1	1	SUPER	1069				
	1201	87401-E0100	ASSY-DEVICE RECLINING DRIVER SEAT RH	1	1	SUPER	1069				
	1301	87402-E0100	ASSY-DEVICE RECLINING ASSIST SEAT RH	1	1	SUPER	1069				
	1401	87451-E0100	ASSY-DEVICE RECLINING DRIVER SEAT LH	1	1	SUPER	1069				
	1501	87452-E0100	ASSY-DEVICE RECLINING ASSIST SEAT LH	1	1	SUPER	1009				
	1601	87406-73400	SHAFT-CONNECTING	2	1	SUPER	1069				
	1701	00334-52520	SCREW	10	50	SUPER	1069				
	1801	00916-41510	WASHER-LOCK	10	50	SUPER	1069				
	1901	86501-E0100	ASSY-SLIDE FRONT SEAT RH	1	1	SEDAN RD					
	02	86501-E1100	ASSY-SLIDE FRONT SEAT RH	1	1	SEDAN LD					
	2001	86502-E0100	ASSY-SLIDE FRONT SEAT LH	1	1	SEDAN RD					
	02	86502-E1100	ASSY-SLIDE FRONT SEAT LH	1	1	SEDAN LD					
	2101	00314-51610	SCREW-MACHINE	4	50	ALL					
	2201	86532-73001	ASSY-CABLE RELEASE	1	5	SEDAN					
	2301	86981-A0600	PLUG-SEAT BACK RED	4	1	ALL					
	02	86981-A0601	PLUG-SEAT BACK BLACK	4	1	ALL					
	03	86981-A0604	PLUG-SEAT BACK GRAY	4	1	ALL					
	04	86981-A0602	PLUG-SEAT BACK BROWN	4	1	ALL					
	2401	86982-A0600	EYELET-SEAT BACK 'A'	4	1	ALL					

NOTE:

© 1972 NISSAN MOTOR CO., LTD.

PRINTED IN JAPAN

FRONT SEAT & SLIDE (1) -SEMI SEPARATE TYPE-

S	KEY NO.	PART NO.	DESCRIPTION	Q'TY	UNIT PKG FOR DIST.	APPLIED MODEL	APPLIED DATE FROM	APPLIED DATE UP TO	ICA N	ICA F	SUPERSEDED
	2501	86983-A0600	EYELET-SEAT BACK 'B'	4	1	ALL					
	2601	96506-E0200	COMP-CASE ASH TRAY WITH CIGARETTE LIGHTER	1	1	SUPER					
	02	96506-E0210	COMP-CASE ASH TRAY	1	1	OP SUPER					
	03	96506-E3100	COMP-CASE ASH TRAY W/CIGA LIGHTER & TUNING SW	1	1	OP SUPER					
	04	96506-E0600	COMP-CASE ASH TRAY W/TUNING SW LESS C/LIGHTER	1	1	OP SUPER					
	2701	96507-E3100	PLATE-FINISH	1	5	OP SUPER					
	2801	96508-E0200	GROMMET-CIGARET LIGHTER	1	1	DELUXE SUPER					
	2901	25330-E0102	COMP-CIGARET LIGHTER GEAR	1	1	DELUXE SUPER					
	3001	85330-E0101	ELEMENT-CIGARET LIGHTER	1	1	DELUXE SUPER					
	3101	00314-00810	SCREW-MACHINE	2	50	DELUXE SUPER					
	3201	00915-11010	WASHER-LOCK SPRING	2	50	DELUXE SUPER					
	3301	86700-E0600	ASSY-ARMREST FRONT SEAT RED	1	1	DELUXE SUPER					
	02	86700-E0201	ASSY-ARMREST FRONT SEAT BEAT BLACK	1		DELUXE SUPER					
	03	86700-E0603	ASSY-ARMREST FRONT SEAT BROWN	1	1	DELUXE SUPER					
	3401	86720-E0600	ASSY-TRIM ARMREST FRONT SEAT RED	1	1	DELUXE SUPER					
	02	86720-E0601	ASSY-TRIM ARMREST FRONT SEAT BLACK	1	1	DELUXE SUPER					
	03	86720-E0602	ASSY-TRIM ARMREST FRONT SEAT GRAY	1	1	DELUXE		0969			
	04	86720-E0603	ASSY-TRIM ARMREST FRONT SEAT BROWN	1	1	DELUXE SUPER					

NOTE:

REVISED: DECEMBER, 1972

© 1972 NISSAN MOTOR CO., LTD.

PRINTED IN JAPAN

FRONT SEAT & SLIDE (1) -SEMI SEPARATE TYPE-

S	KEY NO.	PART NO.	DESCRIPTION	Q'TY	UNIT PKG FOR DIST.	APPLIED MODEL	APPLIED DATE FROM	APPLIED DATE UP TO	ICA N	ICA F	SUPERSEDED
	3501	- 86715-E0600	ASSY-STRAP ARMREST FRONT SEAT RED	1	1	DELUXE SUPER					
	02	- 86715-E0601	ASSY-STRAP ARMREST FRONT SEAT BLACK	1	1	DELUXE SUPER					
	03	- 86715-E0602	ASSY-STRAP ARMREST FRONT SEAT GRAY	1	1	DELUXE		0969			
	04	- 86715-E0603	ASSY-STRAP ARMREST FRONT SEAT BROWN	1	1	DELUXE SUPER					
	3601	- 88716-E0600	ASSY-SCREEN ARMREST FRONT SEAT RED	1		DELUXE SUPER					
	02	- 88716-E0601	ASSY-SCREEN ARMREST FRONT SEAT BLACK	1		DELUXE SUPER					
	03	- 88716-E0602	ASSY-SCREEN ARMREST FRONT SEAT GRAY	1		DELUXE		0969			
	04	- 88716-E0603	ASSY-SCREEN ARMREST FRONT SEAT BROWN	1		DELUXE SUPER					
	3701	- 00510-81910	SCREW-TAPPING	4		DELUXE SUPER					
	3801	- 00915-41010	WASHER-PLAIN	4	50	DELUXE SUPER					
	3901	- 00513-61020	SCREW-TAPPING	2		DELUXE SUPER					
	4001	- 00915-80620	WASHER-FINISH	2	50	DELUXE SUPER					
	4101	- 00530-61320	SCREW-TAPPING	2	50	DELUXE SUPER					
	4201	- 00915-80620	WASHER-FINISH	2	50	DELUXE SUPER					
•	4301	- 00324-41210	SCREW-MACHINE	4	50	DELUXE SUPER					
	02	- 00324-41212	SCREW-MACHINE	4	50	DELUXE SUPER			Y	N	00324-41210

NOTE:

ILLUSTRATION **235**

© 1972 NISSAN MOTOR CO., LTD.

REVISED: DECEMBER, 1972

PRINTED IN JAPAN

NOTE

Printed in Japan

NISSAN MOTOR CO., LTD.

FRONT SEAT & SLIDE (2) -SEMI SEPARATE TYPE-

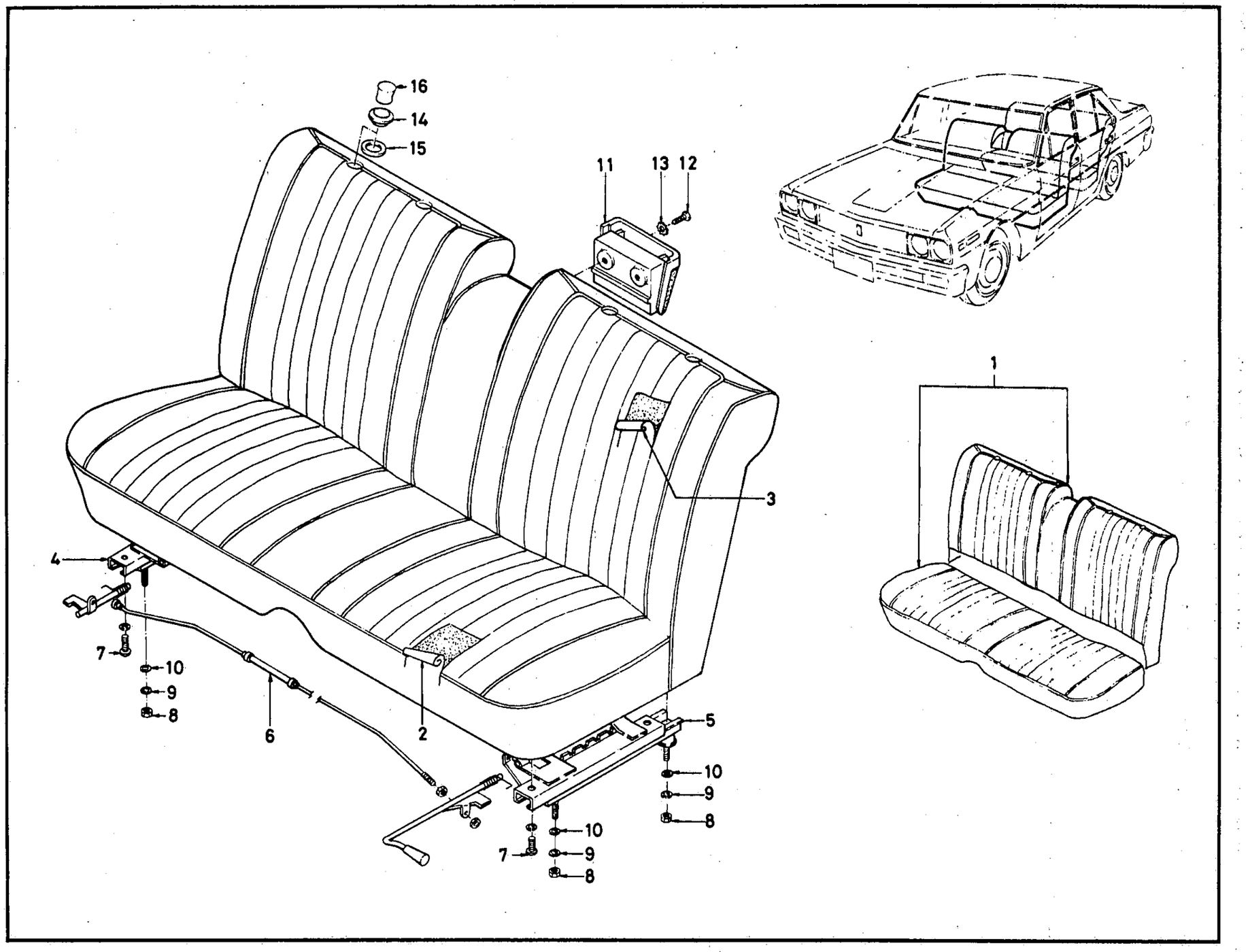

ILLUSTRATION **235A**

© 1972 NISSAN MOTOR CO., LTD.

REVISED: DECEMBER, 1972

PRINTED IN JAPAN

FRONT SEAT & SLIDE (2) -SEMI SEPARATE TYPE-

S	KEY NO.	PART NO.	DESCRIPTION	QTY	UNIT PKG FOR DIST.	APPLIED MODEL	APPLIED DATE FROM	APPLIED DATE UP TO	ICA N	ICA F	SUPERSEDED
	101	86000-E0300	ASSY-FRONT SEAT COMP RED	1	1	PERSONAL CUSTOM P-DX R DRIVE					
	02	86000-E1300	ASSY-FRONT SEAT COMP RED	1	1	PERSONAL CUSTOM P-DX L DRIVE					
	03	86000-E0301	ASSY-FRONT SEAT COMP BLACK	1	1	PERSONAL CUSTOM P-DX R DRIVE					
	04	86000-E1301	ASSY-FRONT SEAT COMP BLACK	1	1	PERSONAL CUSTOM L DRIVE					
	05	86000-E0302	ASSY-FRONT SEAT COMP GRAY	1	1	PERSONAL CUSTOM P-DX R DRIVE					
	06	86000-E1302	ASSY-FRONT SEAT COMP GRAY	1	1	PERSONAL CUSTOM P-DX L DRIVE					
	07	86000-E0303	ASSY-FRONT SEAT COMP BROWN	1	1	PERSONAL CUSTOM P-DX R DRIVE					
	08	86000-E1303	ASSY-FRONT SEAT COMP BROWN	1	1	PERSONAL CUSTOM P-DX L DRIVE					
	201	86320-E0300	ASSY-TRIM FRONT SEAT CUSHION RED	1	1	PERSONAL CUSTOM P-DX					
	02	86320-E0301	ASSY-TRIM FRONT SEAT CUSHION BLACK	1	1	PERSONAL CUSTOM P-DX					
	03	86320-E0302	ASSY-TRIM FRONT SEAT CUSHION GRAY	1	1	PERSONAL CUSTOM P-DX					
	04	86320-E0303	ASSY-TRIM FRONT SEAT CUSHION BROWN	1	1	PERSONAL CUSTOM P-DX					
	301	86620-E0300	ASSY-TRIM FRONT SEAT BACK RED	1	1	PERSONAL CUSTOM P-DX					
	02	86620-E0301	ASSY-TRIM FRONT SEAT BACK BLACK	1	1	PERSONAL CUSTOM P-DX					
	03	86620-E0302	ASSY-TRIM FRONT SEAT BACK GRAY	1	1	PERSONAL CUSTOM P-DX					

NOTE:

© 1972 NISSAN MOTOR CO., LTD.

PRINTED IN JAPAN

FRONT SEAT & SLIDE (2) -SEMI SEPARATE TYPE-

S	KEY NO.	PART NO.	DESCRIPTION	QTY	UNIT PKG FOR DIST.	APPLIED MODEL	APPLIED DATE FROM	APPLIED DATE UP TO	ICA N	ICA F	SUPERSEDED
	304	86620-E0303	ASSY-TRIM FRONT SEAT BACK BROWN	1	1	PERSONAL CUSTOM P-DX R DRIVE					
	401	86501-E0100	ASSY-SLIDE FRONT SEAT RH	1	1	SEDAN RD					
	02	86501-E1100	ASSY-SLIDE FRONT SEAT RH	1	1	SEDAN LD					
	501	86502-E0100	ASSY-SLIDE FRONT SEAT LH	1	1	SEDAN RD					
	02	86502-E1100	ASSY-SLIDE FRONT SEAT LH	1	1	SEDAN LD					
	601	86532-73001	ASSY-CABLE RELEASE	1	5	SEDAN					
	701	00314-51610	SCREW-MACHINE	4	50	ALL					
	801	00911-14510	NUT	4	50	ALL					
	901	00915-11510	WASHER-LOCK SPRING	4	50	ALL					
	1001	00915-41510	WASHER-PLAIN	4	50	ALL					
	1101	96501-21001	ASSY-ASHTRAY	1	1	ALL EXC DX SUPER					
	1201	00520-81910	SCREW-TAPPING	2	50	ALL EXC DX SUPER					
	1301	00916-40610	WASHER-LOCK TOOTH	2		ALL EXC DX SUPER					
	1401	86982-A0600	EYELET-SEAT BACK A	4	1	ALL					
	1501	86983-A0600	EYELET-SEAT BACK	4	1	ALL					
	1601	86981-A0600	PLUG-SEAT BACK RED	4	1	ALL					
	02	86981-A0601	PLUG-SEAT BACK BLACK	4	1	ALL					
	03	86981-A0602	PLUG-SEAT BACK BROWN	4	1	ALL					
	04	86981-A0604	PLUG-SEAT BACK GREY	4	1	ALL					

NOTE:

© 1972 NISSAN MOTOR CO., LTD.

REVISED: DECEMBER, 1972

PRINTED IN JAPAN

NOTE

Printed in Japan

NISSAN MOTOR CO., LTD.

FRONT SEAT & SLIDE (BENCH TYPE)

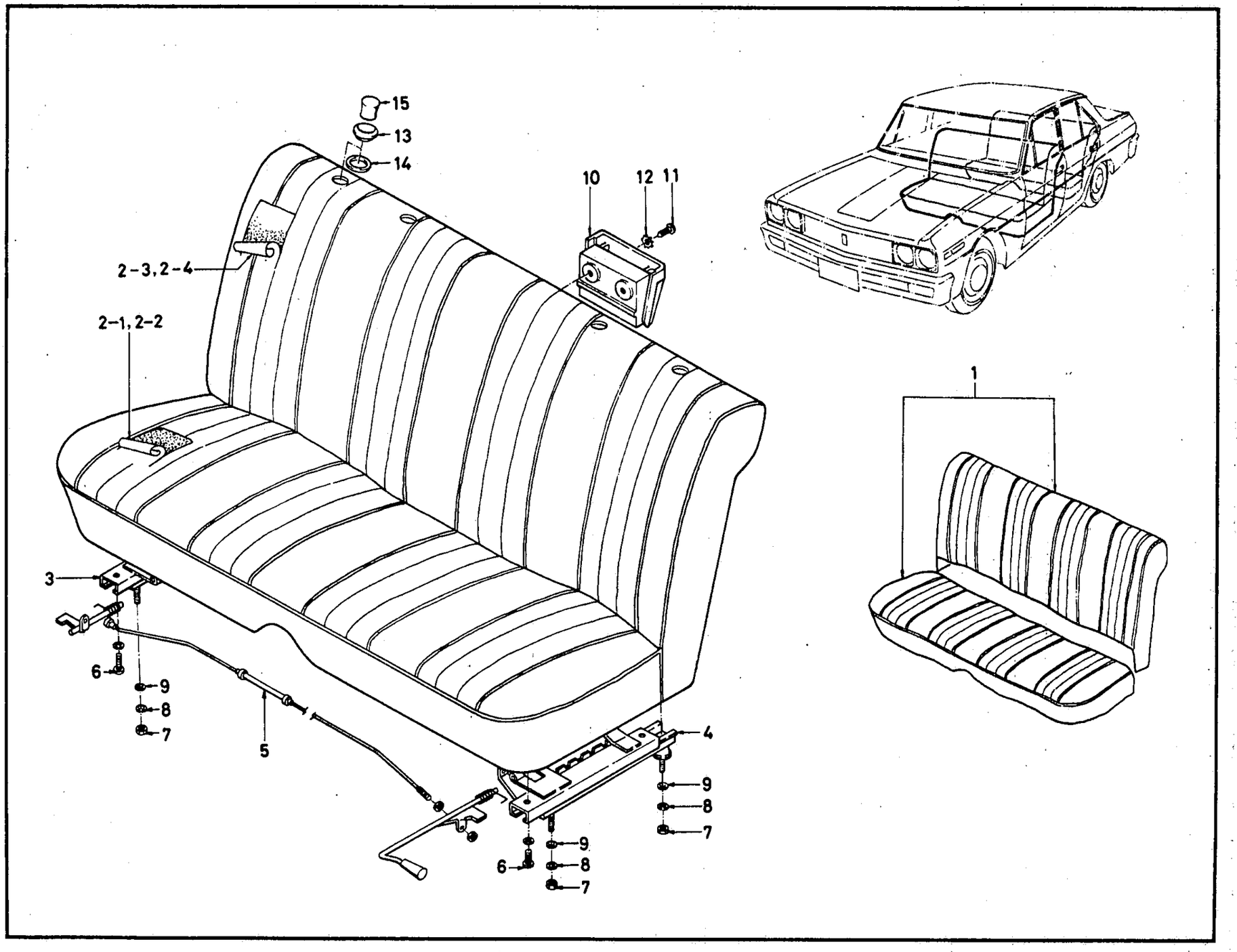

ILLUSTRATION **235B**

© 1972 NISSAN MOTOR CO., LTD.

REVISED: DECEMBER, 1972

PRINTED IN JAPAN

C

FRONT SEAT & SLIDE (BENCH TYPE)

S	KEY NO.	PART NO.	DESCRIPTION	QTY	UNIT PKG FOR DIST.	APPLIED MODEL	APPLIED DATE FROM	APPLIED DATE UP TO	ICA N	ICA F	SUPERSEDED
	101	86000-E0900	ASSY-FRONT SEAT COMP BROWN	1	1	STD RD					
	02	86000-E1900	ASSY-FRONT SEAT COMP BROWN	1	1	STD LD					
	03	86000-E0901	ASSY-FRONT SEAT COMP BLACK	1	1	STD RD					
	04	86000-E1901	ASSY-FRONT SEAT COMP BLACK	1	1	STD LD					
	201	86320-E0900	ASSY-TRIM FRONT SEAT CUSHION BROWN	1	1	STD RD					
	02	86320-E0901	ASSY-TRIM FRONT SEAT CUSHION BLACK	1	1	STD					
	03	86620-E0900	ASSY-TRIM FRONT SEAT BACK BROWN	1	1	STD					
	04	86620-E0901	ASSY-TRIM FRONT SEAT BACK BLACK	1	1	STD					
	301	86501-E0100	ASSY-SLIDE FRONT SEAT RH	1	1	SEDAN RD					
	02	86501-E1100	ASSY-SLIDE FRONT SEAT RH	1	1	SEDAN LD					
	401	86502-E0100	ASSY-SLIDE FRONT SEAT LH	1	1	SEDAN RD					
	02	86502-E1100	ASSY-SLIDE FRONT SEAT LH	1	1	SEDAN LD					
	501	86532-73001	ASSY-CABLE RELEASE	1	5	SEDAN					
	601	00314-51610	SCREW-MACHINE	4	50	ALL					
	701	00911-14510	NUT	4	50	ALL					
	801	00915-11510	WASHER-LOCK SPRING	4	50	ALL					
	901	00915-41510	WASHER-PLAIN	4	50	ALL					
	1001	96501-21001	ASSY-ASHTRAY	1	1	ALL EXC DX SUPER					
	1101	00520-81910	SCREW-TAPPING	2	50	ALL EXC DX SUPER					
	1201	00916-40810	WASHER-LOCK TOOTH	2	50	ALL EXC DX SUPER					
	1301	86982-A0600	EYELET-SEAT BACK A	4	1	ALL					

NOTE:

© 1972 NISSAN MOTOR CO., LTD.

PRINTED IN JAPAN

FRONT SEAT & SLIDE (BENCH TYPE)

S	KEY NO.	PART NO.	DESCRIPTION	QTY	UNIT PKG FOR DIST.	APPLIED MODEL	APPLIED DATE FROM	APPLIED DATE UP TO	ICA N	ICA F	SUPERSEDED
	1401	- 86983-A0600	EYELET-SEAT BACK	4	1	ALL					
	1501	- 86981-A0600	PLUG-SEAT BACK RED	4	1	ALL					
	02	- 86981-A0601	PLUG-SEAT BACK BLACK	4	1	ALL					
	03	- 86981-A0602	PLUG-SEAT BACK BROWN	4	1	ALL					
	04	- 86981-A0604	PLUG-SEAT BACK GREY	4	1	ALL					

NOTE:

© 1972 NISSAN MOTOR CO., LTD.

REVISED: DECEMBER, 1972

PRINTED IN JAPAN

NOTE

Printed in Japan

NISSAN MOTOR CO., LTD.

FRONT SEAT & SLIDE (1) -SEPARATE TYPE-

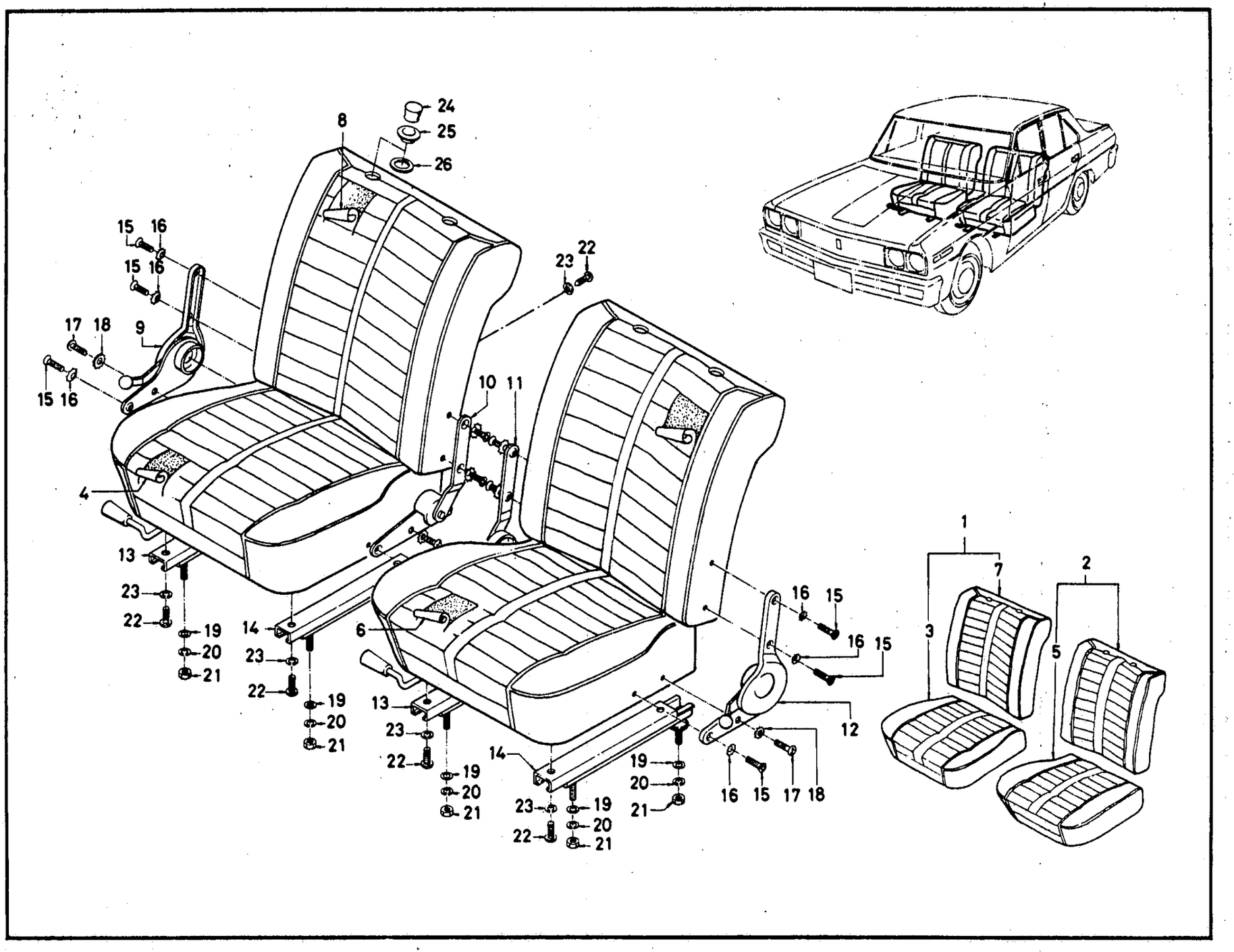

ILLUSTRATION **236**

© 1972 NISSAN MOTOR CO., LTD.

REVISED: DECEMBER, 1972

PRINTED IN JAPAN

FRONT SEAT & SLIDE (1) -SEPARATE TYPE-

S	KEY NO.	PART NO.	DESCRIPTION	QTY	UNIT PKG FOR DIST.	APPLIED MODEL	APPLIED DATE FROM	APPLIED DATE UP TO	ICA N	ICA F	SUPERSEDED
	101	87000-E1220	ASSY-DRIVER SEAT COMP RED	1	1	OP SEDAN EXC STD DIESEL		0969			
	02	87000-E1221	ASSY-DRIVER SEAT COMP BLACK	1	1	OP SEDAN EXC STD DIESEL		0969			
	03	87000-E1222	ASSY-DRIVER SEAT COMP GRAY	1	1	DELUXE P-2000		0969			
	04	87000-E1223	ASSY-DRIVER SEAT COMP BROWN	1	1	OP SEDAN EXC STD DIESEL		0969			
	05	87000-E3100	ASSY-DRIVER SEAT COMP RED	1		OP SEDAN EXC STD	1069				
	06	87000-E3101	ASSY-DRIVER SEAT COMP BLACK	1		OP SEDAN EXC STD DIESEL	1069				
	07	87000-E3102	ASSY-DRIVER SEAT COMP GRAY	1		OP CUSTOM P-DX	1069				
	08	87000-E3103	ASSY-DRIVER SEAT COMP BROWN	1		OP SEDAN EXC STD DIESEL	1069				
	201	87050-E1220	ASSY-ASSIST SEAT COMP RED	1	1	OP SEDAN EXC STD DIESEL		0969			
	02	87050-E1221	ASSY-ASSIST SEAT COMP BLACK	1	1	OP SEDAN EXC STD DIESEL		0969			
	03	87050-E1222	ASSY-ASSIST SEAT COMP GEAR	1	1	OP DELUXE PERSONAL 2000		0969			
	04	87050-E1223	ASSY-ASSIST SEAT COMP BROWN	1	1	OP SEDAN EXC STD DIESEL		0969			
	05	87050-E3100	ASSY-ASSIST SEAT COMP RED	1		OP SEDAN EXC STD DIESEL	1069				
	06	87050-E3101	ASSY-ASSIST SEAT COMP BLACK	1		OP SEDAN EXC STD DIESEL	1069				
	07	87050-E3102	ASSY-ASSIST SEAT COMP GRAY	1		OP CUSTOM P-DX	1069				
	08	87050-E3103	ASSY-ASSIST SEAT COMP BROWN	1		OP SEDAN EXC STD DIESEL	1069				
	301	87300-E0220	ASSY-CUSHION DRIVER SEAT RED	1	1	OP SEDAN EXC STD DIESEL		0969			

NOTE:

© 1972 NISSAN MOTOR CO., LTD.

PRINTED IN JAPAN

FRONT SEAT & SLIDE (1) - SEPARATE TYPE -

S	KEY NO.	PART NO.	DESCRIPTION	QTY	UNIT PKG FOR DIST.	APPLIED MODEL	APPLIED DATE FROM	APPLIED DATE UP TO	ICA N	ICA F	SUPERSEDED
	302	87300-E0221	ASSY-CUSHION DRIVER SEAT BLACK	1	1	OP SEDAN EXC STD DIESEL		0969			
	03	87300-E0222	ASSY-CUSHION DRIVER SEAT GRAY	1	1	OP DELUXE P-2000		0969			
	04	87300-E0223	ASSY-CUSHION DRIVER SEAT BROWN	1	1	OP SEDAN EXC STD DIESEL		0969			
	05	87300-E3100	ASSY-CUSHION DRIVER SEAT RED	1		OP SEDAN EXC STD DIESEL	1069				
	06	87300-E3101	ASSY-CUSHION DRIVER SEAT BLACK	1		OP SEDAN EXC STD DIESEL	1069				
	07	87300-E3102	ASSY-CUSHION DRIVER SEAT GRAY	1		OP CUSTOM P-DX	1069				
	08	87300-E3103	ASSY-CUSHION DRIVER SEAT BROWN	1		OP SEDAN EXC STD DIESEL	1069				
	401	87320-E0220	ASSY-TRIM DRIVER SEAT CUSHION RED	1	1	OP SEDAN EXC STD DIESEL		0969			
	02	87320-E0221	ASSY-TRIM DRIVER SEAT CUSHION BLACK	1	1	OP SEDAN EXC STD DIESEL		0969			
	03	87320-E0222	ASSY-TRIM DRIVER SEAT CUSHION GRAY	1	1	OP DELUXE P-2000		0969			
	04	87320-E0223	ASSY-TRIM DRIVER SEAT CUSHION BROWN	1	1	OP SEDAN EXC STD DIESEL		0969			
	05	87320-E3100	ASSY-TRIM DRIVER SEAT CUSHION RED	1		OP SEDAN EXC STD DIESEL	1069				
	06	87320-E3101	ASSY-TRIM DRIVER SEAT CUSHION BLACK	1	1	OP SEDAN EXC STD DIESEL	1069				
	07	87320-E3102	ASSY-TRIM DRIVER SEAT CUSHION GRAY	1		OP CUSTOM P-DX	1069				
	08	87320-E3103	ASSY-TRIM DRIVER SEAT CUSHION BROWN	1		OP SEDAN EXC STD DIESEL					

NOTE:

© 1972 NISSAN MOTOR CO., LTD.

REVISED: DECEMBER, 1972
PRINTED IN JAPAN

FRONT SEAT & SLIDE (1) -SEPARATE TYPE-

S	KEY NO.	PART NO.	DESCRIPTION	QTY	UNIT PKG FOR DIST.	APPLIED MODEL	APPLIED DATE FROM	APPLIED DATE UP TO	ICA N	ICA F	SUPERSEDED
	501	87350-E0220	ASSY-CUSHION ASSIST SEAT RED	1	1	OP SEDAN EXC STD DIESEL		0969			
	02	87350-E0221	ASSY-CUSHION ASSIST SEAT BLACK	1	1	OP SEDAN EXC STD DIESEL		0969			
	03	87350-E0222	ASSY-CUSHION ASSIST SEAT GRAY	1	1	OP DELUXE P-2000		0969			
	04	87350-E0223	ASSY-CUSHION ASSIST SEAT BROWN	1	1	OP SEDAN EXC STD DIESEL		0969			
	05	87350-E3100	ASSY-CUSHION ASSIST SEAT RED	1		OP SEDAN EXC STD DIESEL	1069				
	06	87350-E3101	ASSY-CUSHION ASSIST SEAT BLACK	1		OP SEDAN EXC STD DIESEL	1069				
	07	87350-E3102	ASSY-CUSHION ASSIST SEAT GRAY	1		OP CUSTOM P-DX	1069				
	08	87350-E3103	ASSY-CUSHION ASSIST SEAT BROWN	1		OP SEDAN EXC STD DIESEL	1069				
	601	87370-E0220	ASSY-TRIM ASSIST SEAT CUSHION RED	1	1	OP SEDAN EXC STD DIESEL		0969			
	02	87370-E0221	ASSY-TRIM ASSIST SEAT CUSHION BLACK	1	1	OP SEDAN EXC STD DIESEL		0969			
	03	87370-E0222	ASSY-TRIM ASSIST SEAT CUSHION GRAY	1	1	OP DELUXE P-2000		0969			
	04	87370-E0223	ASSY-TRIM ASSIST SEAT CUSHION BROWN	1	1	OP SEDAN EXC STD DIESEL		0969			
	05	87370-E3100	ASSY-TRIM ASSIST SEAT CUSHION RED	1		OP SEDAN EXC STD DIESEL	1069				
	06	87370-E3101	ASSY-TRIM ASSIST SEAT CUSHION BLACK	1		OP SEDAN EXC STD DIESEL	1069				
	07	87370-E3102	ASSY-TRIM ASSIST SEAT CUSHION GRAY	1		OP CUSTOM P-DX	1069				

NOTE:

© 1972 NISSAN MOTOR CO., LTD.

PRINTED IN JAPAN

FRONT SEAT & SLIDE (1) - SEPARATE TYPE -

S	KEY NO.	PART NO.	DESCRIPTION	QTY	UNIT PKG FOR DIST.	APPLIED MODEL	APPLIED DATE FROM	APPLIED DATE UP TO	ICA N	ICA F	SUPERSEDED
	608	- 87370-E3103	ASSY-TRIM ASSIST SEAT CUSHION BROWN	1	1	OP SEDAN EXC STD DIESEL	1069				
	701	- 87600-E0220	ASSY-BACK DRIVER SEAT RED	1	1	OP SEDAN EXC STD DIESEL		0969			
	02	- 87600-E0221	ASSY-BACK DRIVER SEAT BLACK	1	1	OP SEDAN EXC STD DIESEL		0969			
	03	- 87600-E0222	ASSY-BACK DRIVER SEAT GRAY	1	1	OP SEDAN EXC STD DIESEL		0969			
	04	- 87600-E0223	ASSY-BACK DRIVER SEAT	1	1	OP SEDAN EXC STD DIESEL		0969			
	05	- 87600-E3120	ASSY-BACK DRIVER SEAT RED	1		OP SEDAN EXC STD DIESEL	1069				
	06	- 87600-E3121	ASSY-BACK DRIVER SEAT BLACK	1		OP SEDAN EXC STD DIESEL	1069				
	07	- 87600-E3122	ASSY-BACK DRIVER SEAT GRAY	1		OP SEDAN EXC STD DIESEL	1069				
	08	- 87600-E3123	ASSY-BACK DRIVER SEAT	1		OP SEDAN EXC STD DIESEL	1069				
	801	- 87620-E0220	ASSY-TRIM DRIVER SEAT BACK RED	1	1	OP SEDAN EXC STD DIESEL		0969			
	02	- 87620-E0221	ASSY-TRIM DRIVER SEAT BACK BLACK	1	1	OP SEDAN EXC STD DIESEL		0969			
	03	- 87620-E0222	ASSY-TRIM DRIVER SEAT BACK GRAY	1	1	OP DELUXE P-2000		0969			
	04	- 87620-E0223	ASSY-TRIM DRIVER SEAT BACK BROWN	1	1	OP SEDAN EXC STD DIESEL		0969			
	05	- 87620-E3120	ASSY-TRIM DRIVER SEAT BACK RED	1		OP SEDAN EXC STD DIESEL	1069				
	06	- 87620-E3121	ASSY-TRIM DRIVER SEAT BACK BLACK	1		OP SEDAN EXC STD DIESEL	1069				

NOTE:

© 1972 NISSAN MOTOR CO., LTD.

REVISED: DECEMBER, 1972
PRINTED IN JAPAN

FRONT SEAT & SLIDE (1) -SEPARATE TYPE-

S	KEY NO.	PART NO.	DESCRIPTION	QTY	UNIT PKG FOR DIST.	APPLIED MODEL	APPLIED DATE FROM	APPLIED DATE UP TO	ICA N	ICA F	SUPERSEDED
	807	- 87620-E3122	ASSY-TRIM DRIVER SEAT BACK GRAY	1		OP CUSTOM P-DX	1069				
	08	- 87620-E3123	ASSY-TRIM DRIVER SEAT BACK BROWN	1		OP SEDAN EXC STD DIESEL	1069				
	901	- 87401-E0120	ASSY-RECLINING DEVICE DRIVER SEAT RH	1	1	OP SEDAN					
	1001	- 87402-E0120	ASSY-RECLINING DEVICE DRIVER SEAT LH	1	1	OP SEDAN					
	1101	- 87451-E0120	ASSY-RECLINING DEVICE ASSIST SEAT RH	1	1	OP SEDAN					
	1201	- 87452-E0120	ASSY-RECLINING DEVICE ASSIST SEAT LH	1	1	OP SEDAN					
	1301	- 87501-78100	ASSY-SLIDE FRONT SEAT RH	1	1	OP SEDAN					
	1401	- 87502-78100	ASSY-SLIDE FRONT SEAT LH	1	1	OP SEDAN					
	1501	- 00334-52520	SCREW-MACHINE	12	50	OP SEDAN					
	1601	- 00916-41510	WASHER-LOCK COUNTER SUNK	12	50	OP SEDAN					
	1701	- 00314-52520	SCREW-MACHINE	4		OP SEDAN					
	1801	- 00916-31510	WASHER-LOCK EXTERNAL	4	50	OP SEDAN					
	1901	- 00915-41510	WASHER-PLAIN	8	50	OP SEDAN					
	2001	- 00915-11510	WASHER-SPRING LOCK	8	50	OP SEDAN					
	2101	- 00911-14510	NUT	8	50	OP SEDAN					
	2201	- 00531-01320	SCREW-TAPPING	4	50	OP SEDAN					
	2301	- 00915-81020	WASHER-FINISH	4	50	OP SEDAN					
	2401	- 86981-A0600	PLUG-SEAT BACK RED	4	1	OP SEDAN					
	02	- 86981-A0601	PLUG-SEAT BACK BLACK	4	1	OP SEDAN					
	03	- 86981-A0602	PLUG-SEAT BACK BROWN	4	1	OP SEDAN					

NOTE:

© 1972 NISSAN MOTOR CO., LTD.

PRINTED IN JAPAN

FRONT SEAT & SLIDE 〔1〕 -SEPARATE TYPE-

S	KEY NO.	PART NO.	DESCRIPTION	QTY	UNIT PKG FOR DIST.	APPLIED MODEL	APPLIED DATE FROM	APPLIED DATE UP TO	ICA N	ICA F	SUPERSEDED
	2404	- 86981-A0604	PLUG-SEAT BACK GRAY	4	1	OP SEDAN					
	2501	- 86982-A0600	EYELET-SEAT BACK A	4	1	OP SEDAN					
	2601	- 86982-A0600	EYELET-SEAT BACK B	4	1	OP SEDAN					

NOTE:

© 1972 NISSAN MOTOR CO., LTD.

REVISED: DECEMBER, 1972
PRINTED IN JAPAN
C

NOTE

Printed in Japan

NISSAN MOTOR CO., LTD.

FRONT SEAT & SLIDE (2) -SEPARATE TYPE-

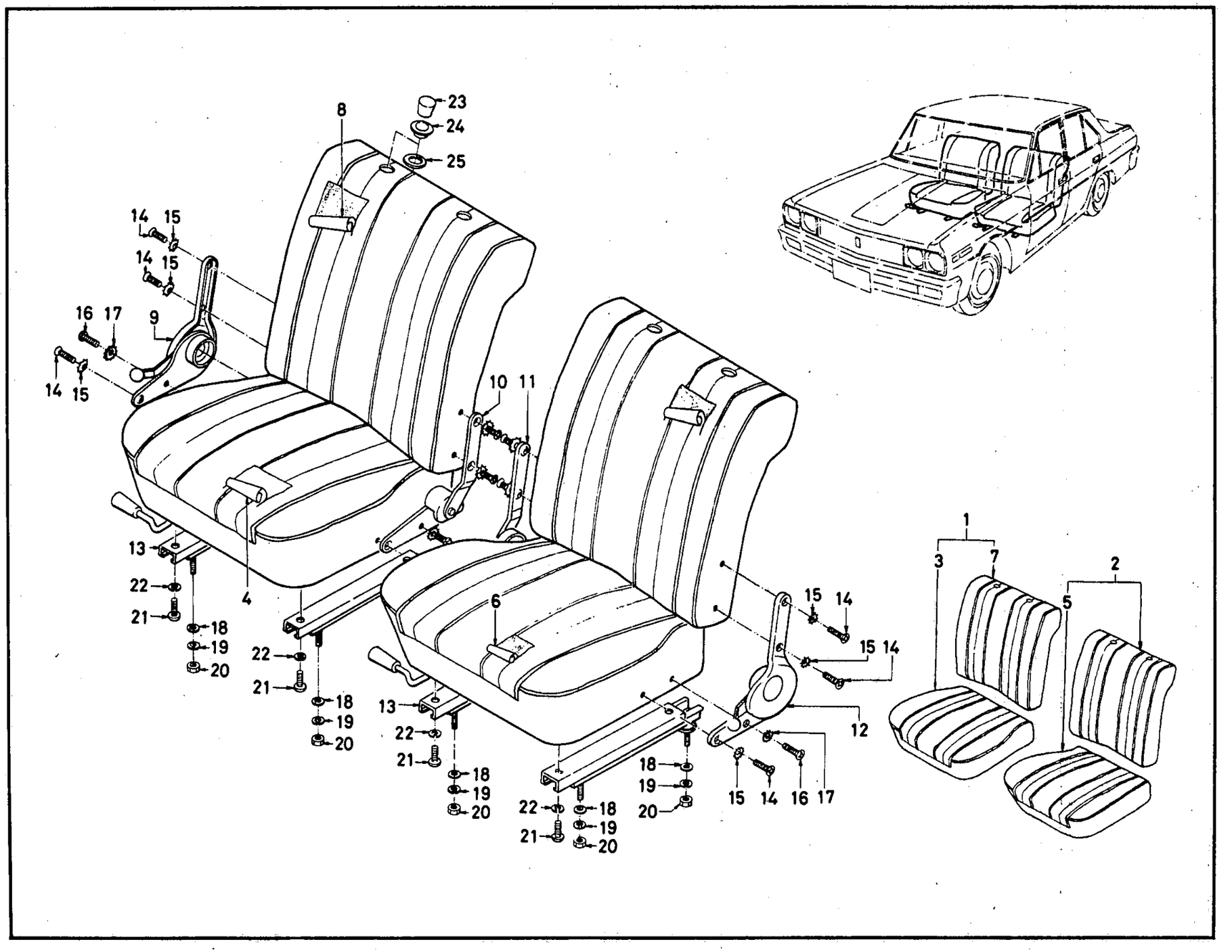

© 1972 NISSAN MOTOR CO., LTD.

REVISED: DECEMBER, 1972

PRINTED IN JAPAN

C

FRONT SEAT & SLIDE (2) -SEPARATE TYPE-

S	KEY NO.	PART NO.	DESCRIPTION	QTY	UNIT PKG FOR DIST.	APPLIED MODEL	APPLIED DATE FROM	APPLIED DATE UP TO	ICA N	ICA F	SUPERSEDED
	101	87000-E1325	ASSY-DRIVER SEAT COMP BROWN	1	1	OP STD					
	02	87000-E1326	ASSY-DRIVER SEAT COMP BLACK	1	1	OP STD					
	201	87050-E1325	ASSY-ASSIST SEAT COMP BROWN	1	1	OP STD					
	02	87050-E1326	ASSY-ASSIST SEAT COMP BLACK	1	1	OP STD					
	301	87300-E0720	ASSY-DRIVER SEAT CUSHION BROWN	1	1	OP STD					
	02	87300-E0721	ASSY-DRIVER SEAT CUSHION BLACK	1	1	OP STD					
	401	87320-E0720	ASSY-TRIM DRIVER SEAT CUSHION BROWN	1	1	OP STD					
	02	87320-E0721	ASSY-TRIM DRIVER SEAT CUSHION BLACK	1	1	OP STD					
	501	87350-E0720	ASSY-ASSIST SEAT CUSHION BROWN	1	1	OP STD					
	02	87350-E0721	ASSY-ASSIST SEAT CUSHION BLACK	1	1	OP STD					
	601	87370-E0720	ASSY-TRIM ASSIST SEAT CUSHION BROWN	1	1	OP STD					
	02	87370-E0721	ASSY-TRIM ASSIST SEAT CUSHION BROWN	1	1	OP STD					
	701	87600-E0720	ASSY-BACK DRIVER SEAT BROWN	1	1	OP STD					
	02	87600-E0721	ASSY-BACK DRIVER SEAT BLACK	1	1	OP STD					
	801	87620-E0720	ASSY-TRIM DRIVER SEAT BACK BROWN	1	1	OP STD					
	02	87620-E0721	ASSY-TRIM DRIVER SEAT BACK BLACK	1	1	OP STD					
	901	87401-E0120	ASSY-RECLINING DEVICE DRIVER SEAT RH	1	1	OP SEDAN					

NOTE:

© 1972 NISSAN MOTOR CO., LTD.

PRINTED IN JAPAN

FRONT SEAT & SLIDE (2) -SEPARATE TYPE-

S	KEY NO.	PART NO.	DESCRIPTION	QTY	UNIT PKG FOR DIST.	APPLIED MODEL	APPLIED DATE FROM	APPLIED DATE UP TO	ICA N	ICA F	SUPERSEDED
	1001	- 87402-E0120	ASSY-RECLINING DEVICE DRIVER SEAT LH	1	1	OP SEDAN					
	1101	- 87451-E0120	ASSY-RECLINING DEVICE ASSIST SEAT RH	1	1	OP SEDAN					
	1201	- 87452-E0120	ASSY-RECLINING DEVICE ASSIST SEAT LH	1	1	OP SEDAN					
	1301	- 87501-78100	ASSY-SLIDE FRONT SEAT RH	2	1	OP SEDAN					
	02	- 87501-78100	ASSY-SLIDE FRONT SEAT RH	2	1	OP SEDAN					
	1401	- 00334-52520	SCREW-MACHINE	12	50	OP SEDAN					
	1501	- 00916-41510	WASHER-LOCK COUNTER	12	50	OP SEDAN					
	1601	- 00314-52520	SCREW-MACHINE	4		OP SEDAN					
	1701	- 00916-31510	WASHER-LOCK EXTERNAL	4	50	OP SEDAN					
	1801	- 00915-41510	WASHER-PLAIN	8	50	OP SEDAN					
	1901	- 00915-11510	WASHER-SPRING LOCK	8	50	OP SEDAN					
	2001	- 00911-14510	NUT	8	50	OP SEDAN					
	2101	- 00314-51610	SCREW-MACHINE	8	50	OP SEDAN					
	2201	- 00915-11510	WASHER-SPRING LOCK	8	50	OP SEDAN					
	2301	- 86981-A0600	PLUG-SEAT BACK RED	4	1	OP SEDAN					
	02	- 86981-A0601	PLUG-SEAT BACK BLACK	4	1	OP SEDAN					
	03	- 86981-A0602	PLUG-SEAT BACK BROWN	4	1	OP SEDAN					
	04	- 86981-A0604	PLUG-SEAT BACK GRAY	4	1	OP SEDAN					
	2401	- 86982-A0600	EYELET-SEAT BACK A	4	1	OP SEDAN					
	2501	- 86983-A0600	EYELET-SEAT BACK B	4	1	OP SEDAN					

NOTE:

© 1972 NISSAN MOTOR CO., LTD.

REVISED: DECEMBER, 1972
PRINTED IN JAPAN

NOTE

Printed in Japan

NISSAN MOTOR CO., LTD.

CONSOLE BOX

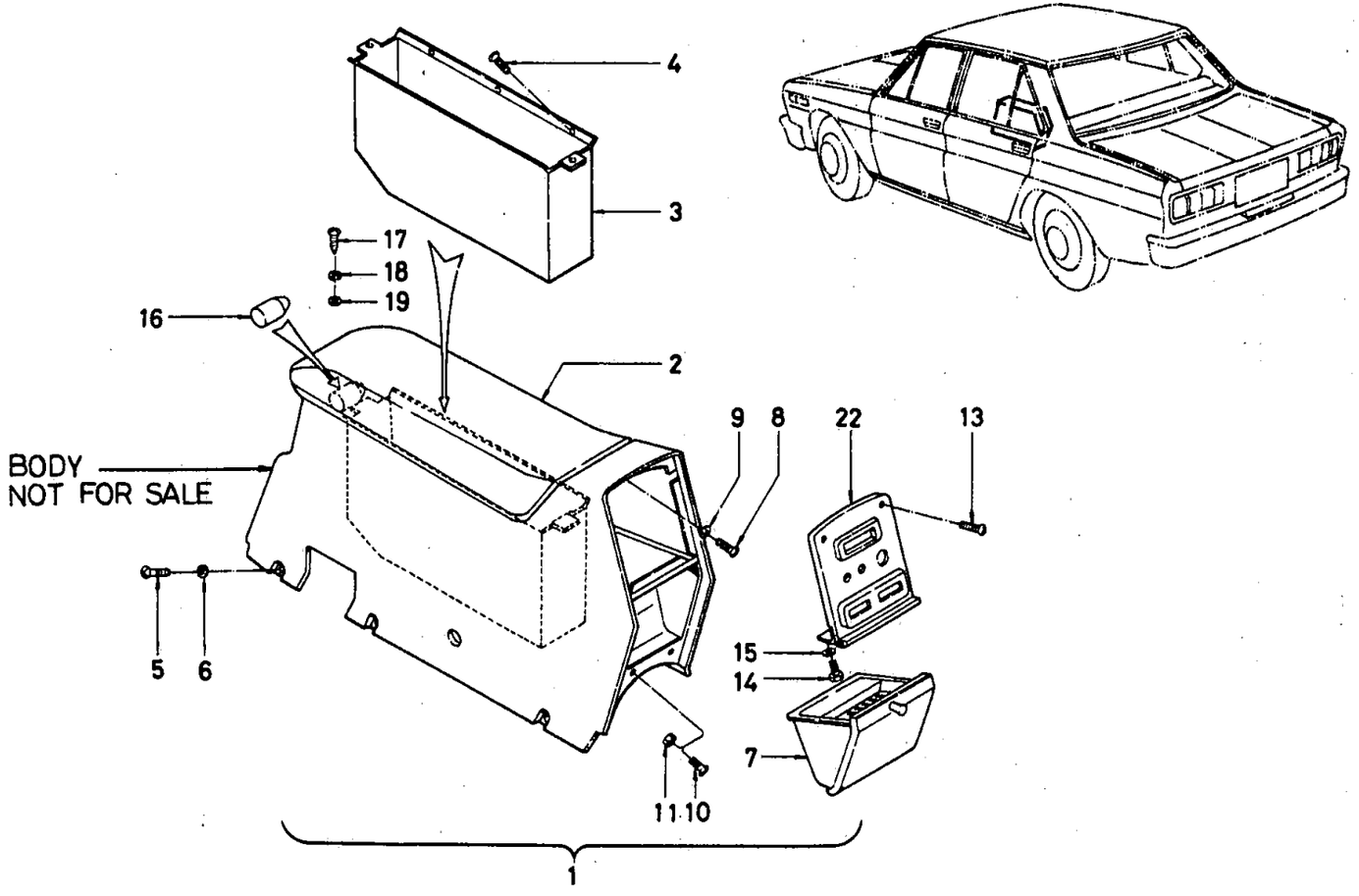

© 1972 NISSAN MOTOR CO., LTD.

REVISED: DECEMBER, 1972

PRINTED IN JAPAN

NISSAN

CONSOLE BOX

S	KEY NO.	PART NO.	DESCRIPTION	Q'TY	UNIT PKG FOR DIST.	APPLIED MODEL	APPLIED DATE FROM	APPLIED DATE UP TO	ICA N	ICA F	SUPERSEDED
	1D1	96910-E0110	ASSY-CONSOLE BOX RED	1	1	Op DELUXE SUPER CUSTOM					
	D2	96910-E0111	ASSY-CONSOLE BOX BLACK	1	1	Op DELUXE SUPER CUSTOM					
	D3	96910-E0112	ASSY-CONSOLE BOX BROWN	1	1	Op DELUXE SUPER CUSTOM					
	D4	96910-E0113	ASSY-CONSOLE BOX GREY	1	1	Op DELUXE SUPER CUSTOM					
	D5	96910-E0300	ASSY-CONSOLE BOX RED	1	1	Op STD P-DX PERSONAL					
	D6	96910-E0301	ASSY-CONSOLE BOX BLACK	1	1	Op STD P-DX PERSONAL					
	D7	96910-E0302	ASSY-CONSOLE BOX BROWN	1	1	Op STD P-DX PERSONAL					
	D8	96910-E0303	ASSY-CONSOLE BOX GREY	1	1	Op STD P-DX PERSONAL					
	2D1	96915-E0110	LID-CONSOLE BOX RED	1	1	Op SEDAN					
*	D2	96915-E0111	LID-CONSOLE BOX BLACK	1	1	Op SEDAN					
	D3	96915-E0112	LID-CONSOLE BOX BROWN	1	1	Op SEDAN					
	D4	96915-E0113	LID-CONSOLE BOX GREY	1	1	Op SEDAN					
*	3D1	96918-E0100	BOX-CONSOLE INNER	1	1	Op SEDAN					
	4D1	00513-60720	SCREW-TAPPING #6	9		Op SEDAN					
	5D1	00511-02620	SCREW-TAPPING	6	50	Op SEDAN					
	6D1	00915-41010	WASHER-PLAIN	6	50	Op SEDAN					
	7D1	96930-E0100	ASSY-ASH TRAY CONSOLE BOX	1	1	Op SEDAN					
	8D1	00810-61210	SCREW-MACHINE	2	50	Op SEDAN					
	9D1	00915-10610	WASHER-SPRING LOCK	2	50	Op SEDAN					

NOTE:

REVISED: DECEMBER, 1972

© 1972 NISSAN MOTOR CO., LTD.

PRINTED IN JAPAN

CONSOLE BOX

S	KEY NO.	PART NO.	DESCRIPTION	Q'TY	UNIT PKG FOR DIST.	APPLIED MODEL	APPLIED DATE FROM	APPLIED DATE UP TO	ICA N	ICA F	SUPERSEDED
	10D1	00320-61210	SCREW-MACHINE	2	50	OP SEDAN					
	11D1	00911-10610	NUT-HEX	2	50	OP SEDAN					
	12D1	96940-E0250	ASSY-FINISHER CONSOLE BOX SWITCH	1	1	OP DELUXE SUPER CUSTOM					
	D2	96940-E0300	ASSY-FINISHER CONSOLE BOX SWITCH	1	1	OP STD P-DX PERSONAL					
	13D1	00320-81220	SCREW-MACHINE	2		OP SEDAN					
*	14D1	00310-61010	SCREW-MACHINE	2	50	OP SEDAN					
	D2	00310-61012	SCREW-MACHINE	2	50	OP SEDAN			Y	N	00310-61010
	15D1	00915-10610	WASHER-SPRING LOCK	2	50	OP SEDAN					
	16D1	74990-73000	ASSY-LOCK CONSOLE BOX	1	1	OP SEDAN					
	17D1	00310-60810	SCREW-MACHINE	2	50	OP SEDAN					
	18D1	00915-40610	WASHER-SPRING LOCK	2	50	OP SEDAN					
	19D1	00915-10610	WASHER-PLAIN	2	50	OP SEDAN					

NOTE:

© 1972 NISSAN MOTOR CO., LTD.

REVISED: DECEMBER, 1972
PRINTED IN JAPAN

NOTE

Printed in Japan

NISSAN MOTOR CO., LTD.

REAR SEAT & ARM REST (1) -SEMI SEPARATE TYPE-

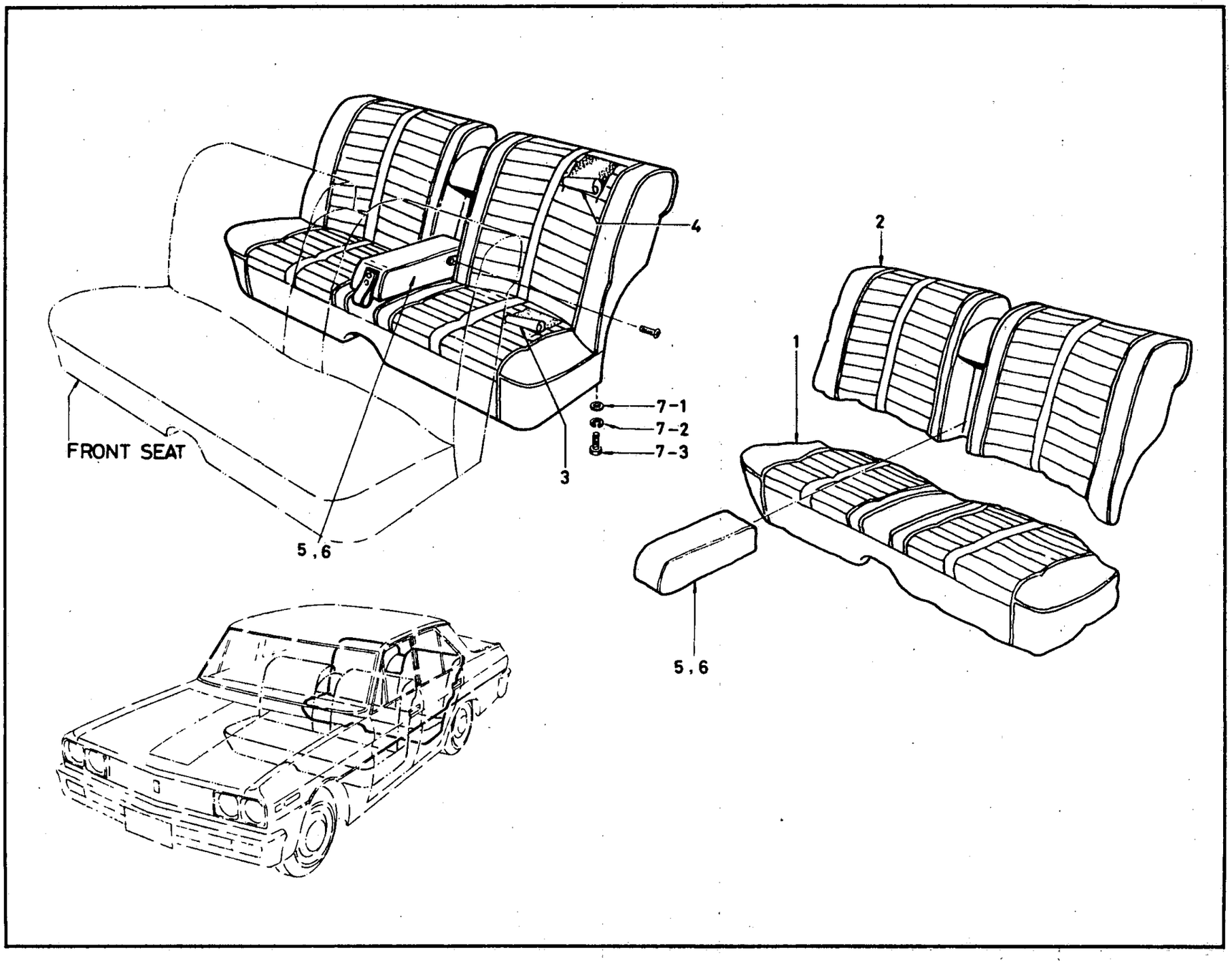

© 1972 NISSAN MOTOR CO., LTD.

REVISED: DECEMBER, 1972

PRINTED IN JAPAN

REAR SEAT & ARM REST (1) -SEMI SEPARATE TYPE-

S	KEY NO.	PART NO.	DESCRIPTION	Q'TY	UNIT PKG FOR DIST.	APPLIED MODEL	APPLIED DATE FROM	APPLIED DATE UP TO	ICA N	ICA F	SUPERSEDED
	101	88300-E0200	ASSY-CUSHION REAR SEAT RED	1	1	DX SUPER		0969			
	02	88300-E0201	ASSY-CUSHION REAR SEAT BLACK	1	1	DX SUPER		0969			
	03	88300-E0203	ASSY-CUSHION REAR SEAT BROWN	1	1	DX SUPER		0969			
	04	88300-E3100	ASSY-CUSHION REAR SEAT RED	1		SUPER	1069				
	05	88300-E3101	ASSY-CUSHION REAR SEAT BLACK	1		SUPER	1069				
	06	88300-E3102	ASSY-CUSHION REAR SEAT GRAY	1		SUPER	1069				
	07	88300-E3103	ASSY-CUSHION REAR SEAT BROWN	1		SUPER	1069				
	201	88600-E0200	ASSY-BACK REAR SEAT RED	1	1	DX SUPER		0969			
	02	88600-E0201	ASSY-BACK REAR SEAT BLACK	1	1	DX SUPER		0969			
	03	88600-E0203	ASSY-BACK REAR SEAT BROWN	1	1	DX SUPER		0969			
	04	88600-E3100	ASSY-BACK REAR SEAT RED	1	1	SUPER	1069				
	05	88600-E3101	ASSY-BACK REAR SEAT BLACK	1		SUPER	1069				
	06	88600-E3102	ASSY-BACK REAR SEAT GRAY	1		SUPER	1069				
	07	88600-E3103	ASSY-BACK REAR SEAT BROWN	1		SUPER	1069				
	301	88320-E0200	ASSY-TRIM REAR SEAT CUSHION RED	1	1	DX SUPER		0969			
	02	88320-E0201	ASSY-TRIM REAR SEAT CUSHION BLACK	1	1	DX SUPER		0969			
	03	88320-E0203	ASSY-TRIM REAR SEAT CUSHION BROWN	1	1	DX SUPER		0969			
	04	88320-E3100	ASSY-TRIM REAR SEAT CUSHION RED	1	1	SUPER	1069				
	05	88320-E3101	ASSY-TRIM REAR SEAT CUSHION BLACK	1	1	SUPER	1069				
	06	88320-E3102	ASSY-TRIM REAR SEAT GRAY	1	1	SUPER	1069				

NOTE:

© 1972 NISSAN MOTOR CO., LTD.

PRINTED IN JAPAN

REAR SEAT & ARM REST (1) -SEMI SEPARATE TYPE-

S	KEY NO.	PART NO.	DESCRIPTION	Q'TY	UNIT PKG FOR DIST.	APPLIED MODEL	APPLIED DATE FROM	APPLIED DATE UP TO	ICA N	ICA F	SUPERSEDED
	307	88320-E3103	ASSY-TRIM REAR SEAT CUSHION BROWN	1	1	SUPER	1069				
	401	88620-E0200	ASSY-TRIM REAR SEAT BACK RED	1	1	DX SUPER		0969			
	02	88620-E0201	ASSY-TRIM REAR SEAT BACK BLACK	1	1	DX SUPER		0969			
	03	88620-E0203	ASSY-TRIM REAR SEAT BACK BROWN	1	1	DX SUPER		0969			
	04	88620-E3100	ASSY-TRIM REAR SEAT BACK RED	1	1	SUPER	1069				
	05	88620-E3101	ASSY-TRIM REAR SEAT BACK BLACK	1	1	SUPER	1069				
	06	88620-E3102	ASSY-TRIM REAR SEAT BACK GRAY	1	1	SUPER	1069				
	07	88620-E3103	ASSY-TRIM REAR SEAT BACK BROWN	1	1	SUPER	1069				
	501	88700-E0600	ASSY-ARMREST REAR SEAT RED	1	1	DX SUPER					
	02	88720-E0600	ASSY-TRIM ARM REST REAR SEAT RED	1	1	DX SUPER					
	03	88700-E0601	ASSY-ARMREST REAR SEAT BLACK	1	1	DX SUPER					
	601	88720-E0601	ASSY-TRIM ARMREST REAR SEAT BLACK	1	1	DX SUPER					
	02	88700-E0603	ASSY-ARMREST REAR SEAT BROWN	1	1	DX SUPER					
	03	88720-E0603	ASSY-TRIM ARMREST REAR SEAT BROWN	1	1	DX SUPER					
	701	00915-51410	WASHER-PLAIN	2	50	SEDAN					
	02	00915-11410	WASHER-SPRING	2	50	SEDAN					
	03	00324-41210	SCREW-MACHINE	4	50	DX SUPER					
	04	00324-41212	SCREW-MACHINE	4	50	DX SUPER	1069		Y	N	00324-41210

NOTE:

ILLUSTRATION **238**

© 1972 NISSAN MOTOR CO., LTD.

REVISED: DECEMBER, 1972

PRINTED IN JAPAN

NOTE

Printed in Japan

NISSAN MOTOR CO., LTD.

REAR SEAT (2) -BENCH TYPE-

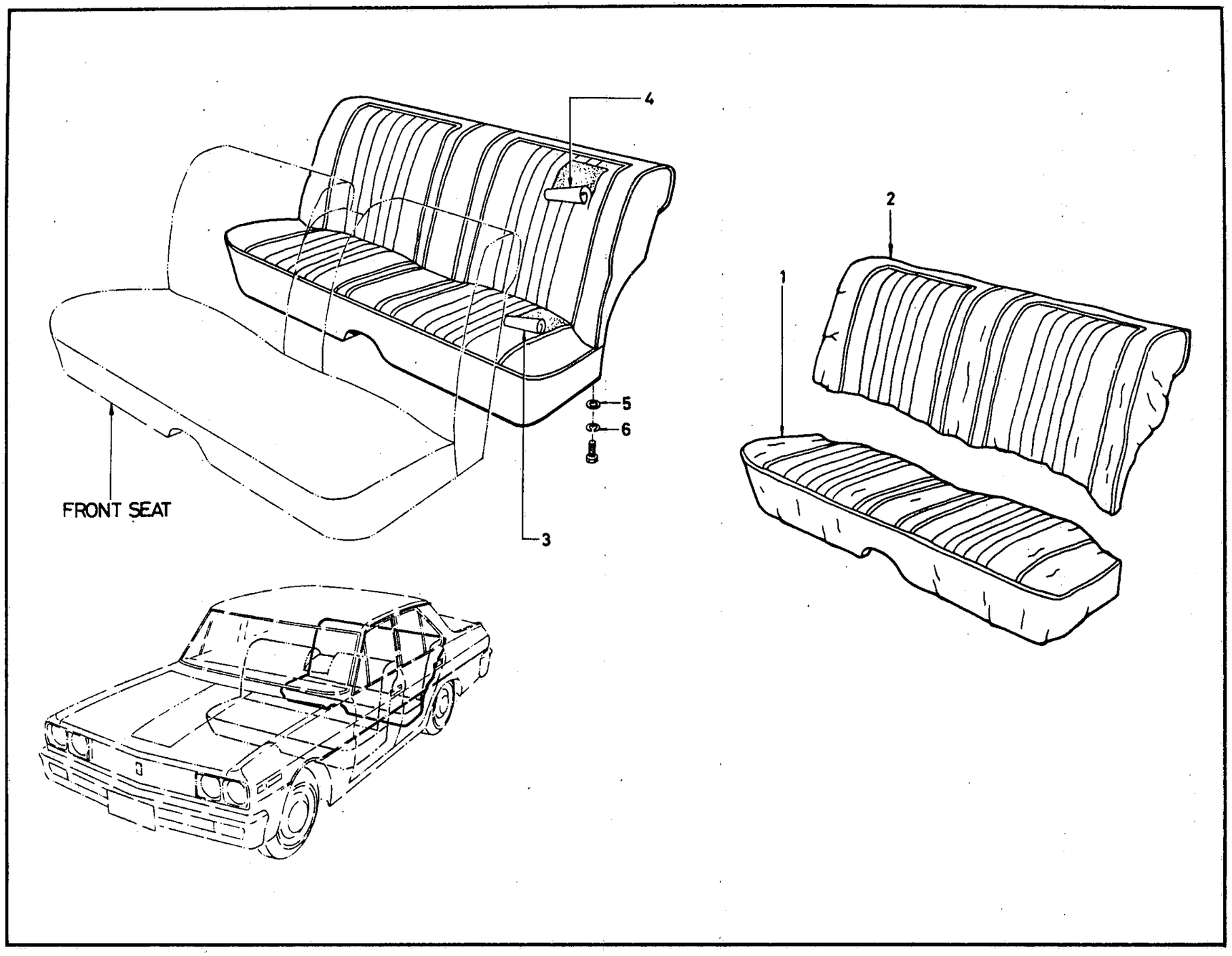

© 1972 NISSAN MOTOR CO., LTD.

REVISED: DECEMBER, 1972

PRINTED IN JAPAN

C

REAR SEAT (2) -BENCH TYPE-

S	KEY NO.	PART NO.	DESCRIPTION	Q'TY	UNIT PKG FOR DIST.	APPLIED MODEL	APPLIED DATE FROM	APPLIED DATE UP TO	ICA N	ICA F	SUPERSEDED
	101	88300-E0300	ASSY-CUSHION REAR SEAT RED	1	1	PERSONAL P-DX CUSTOM					
	02	88300-E0301	ASSY-CUSHION REAR SEAT BLACK	1	1	PERSONAL P-DX CUSTOM					
	03	88300-E0302	ASSY-CUSHION REAR SEAT GRAY	1	1	PERSONAL P-DX CUSTOM					
	04	88300-E0303	ASSY-CUSHION REAR SEAT BROWN	1	1	PERSONAL P-DX CUSTOM					
	201	88600-E0300	ASSY-BACK REAR SEAT RED	1	1	PERSONAL P-DX CUSTOM					
	02	88600-E0301	ASSY-BACK REAR BLACK	1	1	PERSONAL P-DX CUSTOM					
	03	88600-E0302	ASSY-BACK REAR SEAT GRAY	1	1	PERSONAL P-DX CUSTOM					
	04	88600-E0303	ASSY-BACK REAR SEAT BROWN	1	1	PERSONAL P-DX CUSTOM					
	301	88320-E0300	ASSY-TRIM REAR SEAT CUSHION RED	1	1	PERSONAL P-DX CUSTOM					
	02	88320-E0301	ASSY-TRIM REAR SEAT CUSHION BLACK	1	1	PERSONAL P-DX CUSTOM					
	03	88320-E0302	ASSY-TRIM REAR SEAT GRAY	1	1	PERSONAL P-DX CUSTOM					
	04	88320-E0303	ASSY-TRIM REAR SEAT CUSHION BROWN	1	1	PERSONAL P-DX CUSTOM					
	401	88620-E0300	ASSY-TRIM REAR SEAT BACK RED	1	1	PERSONAL P-DX CUSTOM					
	02	88620-E0301	ASSY-TRIM REAR SEAT BACK BLACK	1	1	PERSONAL P-DX CUSTOM					
	03	88620-E0302	ASSY-TRIM REAR SEAT BACK GRAY	1	1	PERSONAL P-DX CUSTOM					

NOTE:

© 1972 NISSAN MOTOR CO., LTD.

PRINTED IN JAPAN

REAR SEAT (2) -BENCH TYPE-

S	KEY NO.	PART NO.	DESCRIPTION	QTY	UNIT PKG FOR DIST.	APPLIED MODEL	APPLIED DATE FROM	APPLIED DATE UP TO	ICA N	ICA F	SUPERSEDED
	404	- 88620-E0303	ASSY-TRIM REAR SEAT BACK BROWN	1	1	PERSONAL P-DX CUSTOM					
	501	- 00915-51410	WASHER-PLAIN	2	50	PERSONAL P-DX CUSTOM					
	601	- 00915-11410	WASHER-SPRING	2	50	PERSONAL P-DX CUSTOM					

NOTE:

© 1972 NISSAN MOTOR CO., LTD.

REVISED: DECEMBER, 1972

ILLUSTRATION 238 A

PRINTED IN JAPAN

C

NOTE

Printed in Japan

NISSAN MOTOR CO., LTD.

REAR SEAT (3) —BENCH TYPE—

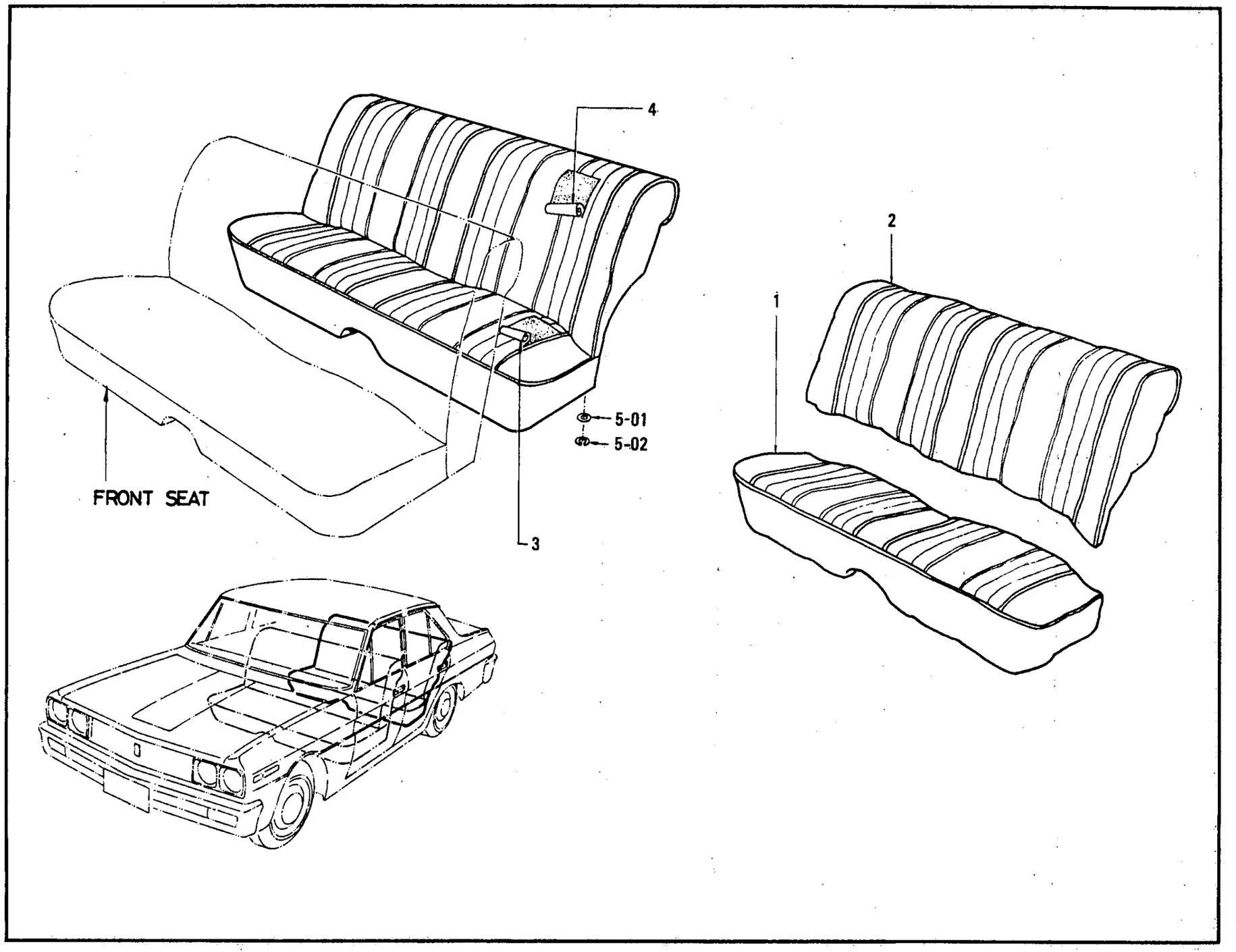

© 1972 NISSAN MOTOR CO., LTD.

ILLUSTRATION **238 B**

REVISED: DECEMBER, 1972

PRINTED IN JAPAN

REAR SEAT (3) —BENCH TYPE—

S	KEY NO.	PART NO.	DESCRIPTION	QTY	UNIT PKG FOR DIST.	APPLIED MODEL	APPLIED DATE FROM	APPLIED DATE UP TO	ICA N	ICA F	SUPERSEDED
	101	88300-E0700	ASSY-CUSHION REAR SEAT BROWN	1	1	STD					
	02	88300-E0701	ASSY-CUSHION REAR SEAT BLACK	1	1	STD					
	201	88600-E0701	ASSY-BACK REAR SEAT BLACK	1	1	STD					
	02	88600-E0700	ASSY-BACK REAR SEAT BROWN	1	1	STD					
	301	88320-E0700	ASSY-TRIM REAR SEAT CUSHION BROWN	1	1	STD					
	02	88320-E0701	ASSY-TRIM REAR SEAT CUSHION BLACK	1	1	STD					
	401	88620-E0701	ASSY-TRIM REAR SEAT BLACK	1	1	STD					
	02	88620-E0700	ASSY-TRIM REAR SEAT BLACK BROWN	1	1	SUPER DX					
	501	00915-51410	WASHER-PLAIN	2	50	SEDAN					
	02	00915-11410	WASHER-SPRING	2	50	SEDAN					

NOTE:

© 1972 NISSAN MOTOR CO., LTD.

PRINTED IN JAPAN

NOTE

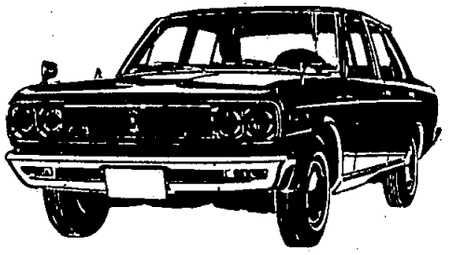

NOTE

Printed in Japan

NISSAN MOTOR CO., LTD.

SAFETY BELT (SEDAN)

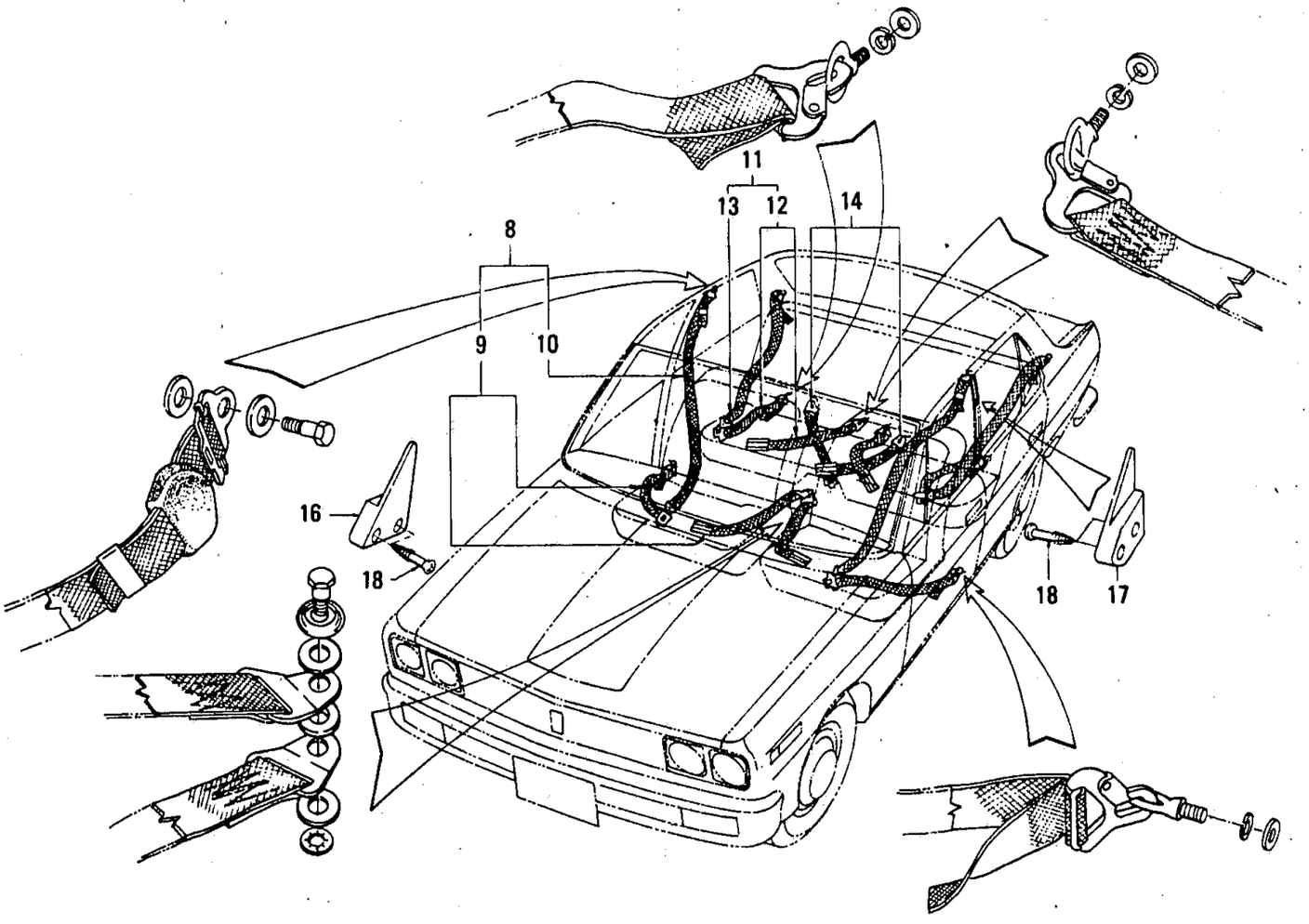

© 1972 NISSAN MOTOR CO., LTD.

ILLUSTRATION **239-1**

REVISED: DECEMBER, 1972

PRINTED IN JAPAN

HEAD REST (SEDAN)

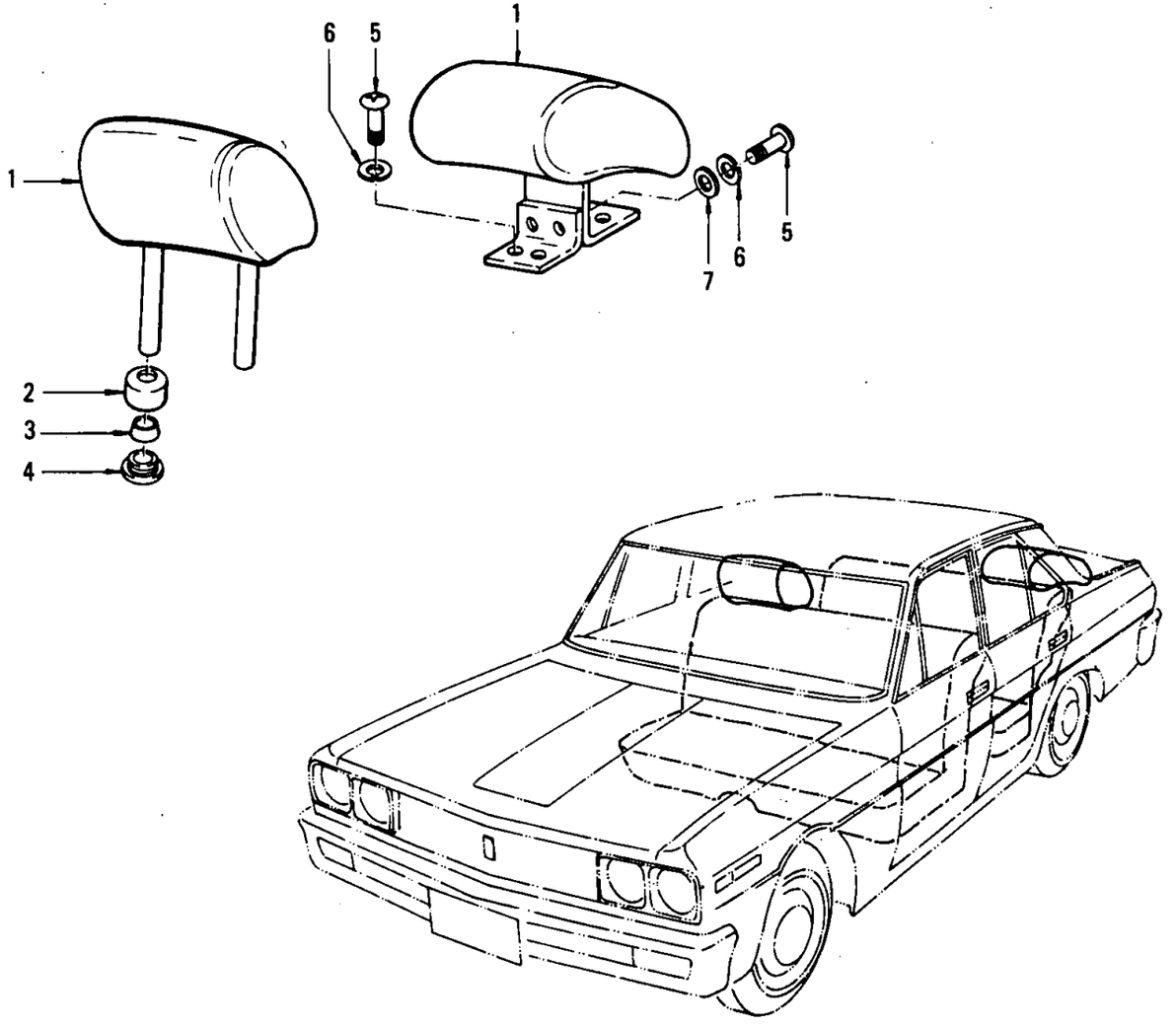

© 1972 NISSAN MOTOR CO., LTD.

PRINTED IN JAPAN

SAFETY BELT & HEAD REST (SEDAN)

S	KEY NO.	PART NO.	DESCRIPTION	QTY	UNIT PKG FOR DIST.	APPLIED MODEL	APPLIED DATE FROM	APPLIED DATE UP TO	ICA N	ICA F	SUPERSEDED
•	101	86400-E0101	ASSY-HEAD REST FRONT SEAT BLACK	2	1	OP SEDAN					
	02	86400-E4900	ASSY-HEAD REST FRONT SEAT BLACK	1	1	OP SEDAN			Y	Y	86400-E0101
	03	88400-E0101	SET-HEAD REST REAR SEAT BLACK	2	1	OP SUPER					
	04	88400-E0601	SET-HEAD REST REAR SEAT BLACK	2	1	OP SEDAN EXC SUPER					
•	201	86491-E0100	STOPPER-HEAD REST UPPER	4		OP ALL					
	02	86490-E0100	STOPPER-HEAD REST UPPER	4		OP ALL			C	N	86491-E0100
•	301	86493-E0100	CLIP-'C'	4	10	OP ALL					
	02	86490-E0100	CLIP-'C'	4		OP ALL			C	N	86493-E0100
•	401	86492-E0100	STOPPER-HEAD REST LOWER	4	1	OP ALL					
	02	86490-E0100	STOPPER-HEAD REST LOWER	4		OP ALL			C	N	86492-E0100
	501	00334-51842	SCREW-MACHINE FIXING REAR HEAD REST	4	50	OP SEDAN EXC SUPER					
	02	00334-53042	SCREW-MACHINE FIXING REAR HEAD REST	8	50	OP SEDAN					
	601	00916-41542	WASHER-LOCK FIXING REAR HEAD REST	12	10	OP SUPER					
	701	00915-41510	WASHER-PLAIN FIXING REAR HEAD REST	2	50	OP SEDAN					
•	801	86830-E0100	SET-SAFTY BELT FRONT SEAT 3POINT TYPE	2		OP SEDAN					
	02	86830-E0105	SET-SAFTY BELT FRONT SEAT 3POINT TYPE	2	1	OP SEDAN			Y	Y	86830-E0100
	901	86820-E0100	SET-SAFTY BELT FRONT SEAT 2POINT TYPE	2		OP SEDAN					

NOTE:

© 1972 NISSAN MOTOR CO., LTD.

REVISED: DECEMBER, 1972
PRINTED IN JAPAN

SAFETY BELT & HEAD REST (SEDAN)

S	KEY NO.	PART NO.	DESCRIPTION	QTY	UNIT PKG FOR DIST.	APPLIED MODEL	APPLIED DATE FROM	APPLIED DATE UP TO	ICA N	ICA F	SUPERSEDED
	9 02	- 86820-E0105	SET-SAFTY BELT FRONT SEAT 2POINT TYPE	2		OP SEDAN			Y	Y	86820-E0100
	03	- H6820-E0100	SET-SAFETY BELT FRONT SEAT 2POINT TYPE BLACK	2		OP SEDAN					
•	10 01	- 86810-21004	ASSY-BELT SHOULDER	2	1	OP SEDAN					
	02	- 86810-A4400	ASSY-BELT SHOULDER	2	1	OP SEDAN			Y	Y	86810-21004
	03	- 86830-E4900	SET-SAFETY BELT FRONT SEAT 3POINT PUSH TYPE BLACK	2	1	OP SEDAN	1069		Y	Y	86400-E0101
•	11 01	- 88830-E0100	SET-SAFTY BELT REAR SEAT 3POINT TYPE	2		OP SEDAN		0969			
	02	- 88830-E0105	SET-SAFTY BELT REAR SEAT 3POINT TYPE	2	1	OP SEDAN			Y	Y	88830-E0100
	03	- 88830-E4900	SET-SAFTY BELT REAR SEAT 3POINT TYPE	2	1	OP SEDAN	1069				
	04	- 86820-E4900	SET-SAFETY BELT FRONT SEAT 2POINT PUSH TYPE BLACK	2	1	OP SEDAN	1069		C	N	86491-E0100
•	12 01	- 88820-E0100	SET-SAFTY BELT REAR SEAT 2POINT TYPE	2		OP SEDAN		0969			
	02	- 88820-E0105	SET-SAFTY BELT REAR SEAT 2POINT TYPE	2	1	OP SEDAN					
	03	- 86810-E4900	ASSY-BELT SHOULDER PUSH TYPE	2	1	OP SEDAN	1069				
	04	- 88820-E4900	SET-SAFTY BELT REAR SEAT 2POINT TYPE	2	1	OP SEDAN	1069				
	05	- H8820-E0100	SET-SAFETY BELT REAR SEAT 2POINT BLACK	2		OP SEDAN					
•	13 01	- 86810-21004	ASSY-BELT SHOULDER	2	1	OP SEDAN		0969			
	02	- 86810-A4400	ASSY-BELT SHOULDER	2	1	OP SEDAN			Y	Y	86810-21004
	03	- 86810-E4900	SET-SAFETY BELT REAR O/SIDE 3POINT PUSH TYPE BLACK	2	1	OP SEDAN	1069				

NOTE:

C

PRINTED IN JAPAN

© 1972 NISSAN MOTOR CO., LTD.

SAFETY BELT & HEAD REST (SEDAN)

S	KEY NO.	PART NO.	DESCRIPTION	QTY	UNIT PKG FOR DIST.	APPLIED MODEL	APPLIED DATE FROM	APPLIED DATE UP TO	ICA N	ICA F	SUPERSEDED
•	1401	88820-E0110	SET-SAFETY BELT REAR SEAT CENTER	1		OP SEDAN		0969			
	02	88820-E0115	SET-SAFETY BELT REAR SEAT CENTER	1	1	OP SEDAN			Y	Y	88820-E0110
	03	88820-E4910	SET-SAFETY BELT REAR O/SIDE 2POINT PUSH TYPE BLACK	1	1	OP SEDAN	1069				
	1501	H8820-E0101	SET-SAFETY BELT REAR CENTER 2 POINT TYPE BLACK	1		OP SEDAN					
	1601	86811-79000	HOOK-SHOULDER BELT RH	1	1	OP SEDAN					
	1701	86812-79000	HOOK-SHOULDER BELT LH	1	1	OP SEDAN					
	1801	08533-42042	SCREW-MACHINE	4		OP SEDAN					

NOTE:

© 1972 NISSAN MOTOR CO., LTD.

REVISED: DECEMBER, 1972
PRINTED IN JAPAN

NOTE

Printed in Japan

NISSAN MOTOR CO., LTD.

PUB. No.: C-0020 VOL. 2

ILLUSTRATION No.: 240, 241

A spare ILLUSTRATION No. in the future.

© 1972 NISSAN MOTOR CO., LTD.

Printed in Japan

BODY (WAGON & VAN)

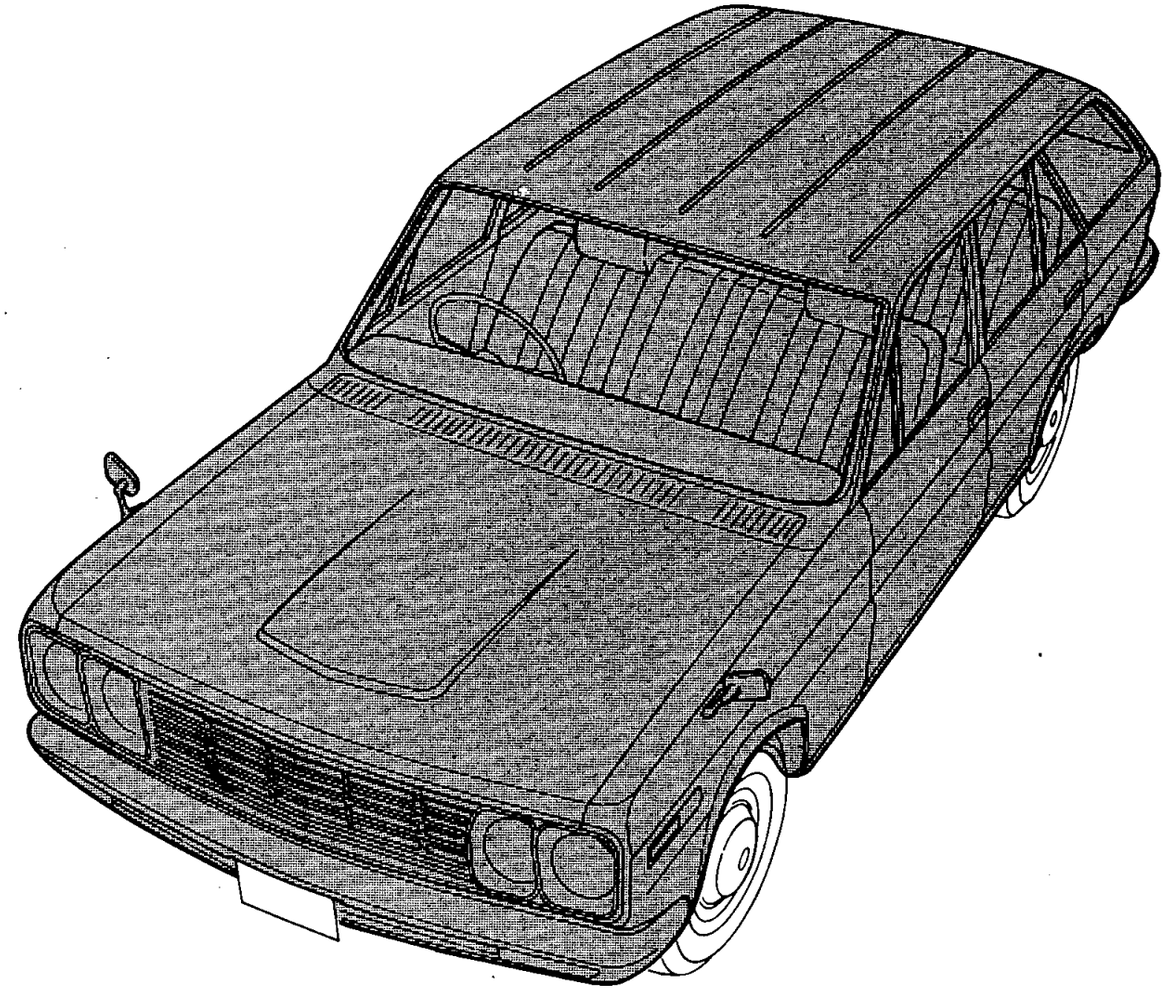

NOTE

Printed in Japan

NISSAN MOTOR CO., LTD.

RADIATOR GRILLE & FRONT BUMPER (W & V)

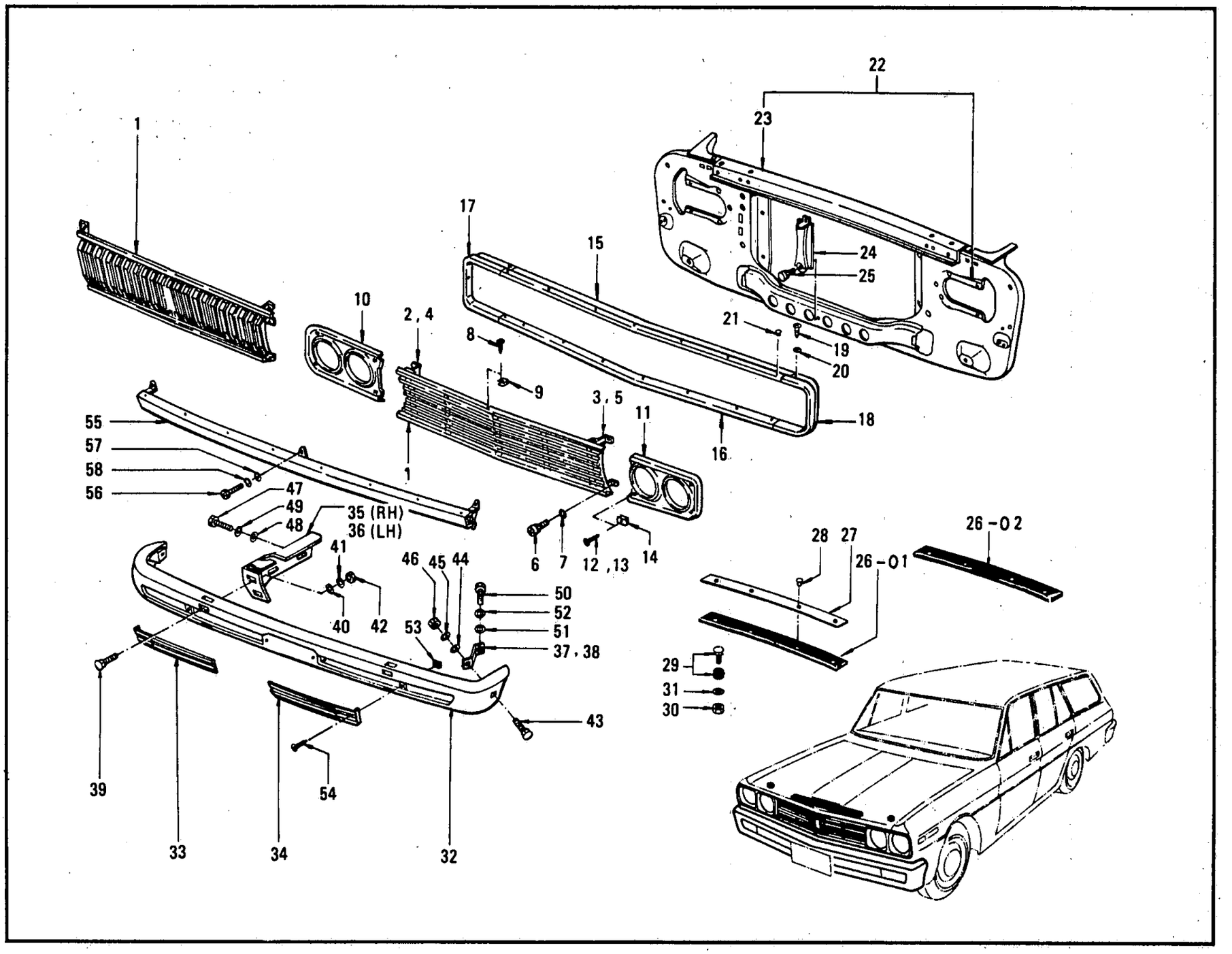

ILLUSTRATION **242**

© 1972 NISSAN MOTOR CO., LTD.

REVISED: DECEMBER, 1972

PRINTED IN JAPAN

RADIATOR GRILLE & FRONT BUMPER (W & V)

S	KEY NO.	PART NO.	DESCRIPTION	Q'TY	UNIT PKG FOR DIST.	APPLIED MODEL	APPLIED DATE FROM	APPLIED DATE UP TO	ICA N	ICA F	SUPERSEDED
	101	62301-E0201	GRILLE-RADIATOR	1	1	WAGON					
	02	62301-E0300	GRILLE-RADIATOR	1	1	VAN					
	201	62392-E0200	BRACKET-RADIATOR GRILLE SIDE RH	1	1	WAGON					
	301	62393-E0200	BRACKET-RADIATOR	1	1	WAGON					
	401	62392-E0300	BRACKET-RADIATOR GRILLE SIDE RH	1	1	VAN					
	501	62393-E0300	BRACKET-RADIATOR GRILLE SIDE LH	1	1	VAN					
	601	00314-41614	SCREW-MACHIN SIDE LOW FIX	2	50	WAGON & VAN					
	701	00915-41410	WASHER-PLAIN 1/4	4	50	WAGON & VAN					
	801	77710-89911	SCREW-TAPPING CENTER FIX	2	10	WAGON & VAN					
	901	08963-20510	NUT-SPRING	2	50	WAGON & VAN					
	1001	62410-E0100	RIM-HEAD LAMP RH	1	1	WAGON					
	02	62410-E0300	RIM-HEAD LAMP RH	1	1	VAN					
	1101	62411-E0100	RIM-HEAD LAMP LH	1	1	WAGON					
	02	62411-E0300	RIM-HEAD LAMP LH	1		VAN					
	1201	77710-89910	SCREW-TAPPING	6	10	WAGON					
	1301	63831-10600	SCREW-TAPPING	8	10	VAN					
	1401	08964-10410	NUT-SPRING	6	50	WAGON					
	1501	62351-E0100	SURROUND-MOULDING	1	1	WAGON & VAN					
	02	62351-E0199	SURROUND-MOULDING	1	1	WAGON & VAN			C	C	62351-E0100
	1601	62352-E0100	SURROUND-MOULDING LOWER	1	1	WAGON & VAN					
	02	62352-E0199	SURROUND-MOULDING LOWER	1	1	WAGON & VAN			C	C	62352-E0100

NOTE:

© 1972 NISSAN MOTOR CO., LTD.

PRINTED IN JAPAN

RADIATOR GRILLE & FRONT BUMPER (W & V)

S	KEY NO.	PART NO.	DESCRIPTION	Q'TY	UNIT PKG FOR DIST.	APPLIED MODEL	APPLIED DATE FROM	APPLIED DATE UP TO	ICA N	ICA F	SUPERSEDED
	1701	62353-E0100	SURROUND-MOULDING SIDE RH	1	5	WAGON & VAN					
	1801	62354-E0100	SURROUND-MOLLDING SIDE LH	1	5	WAGON & VAN					
	1901	77710-89911	SCREW-TAPPING	12	10	WAGON & VAN					
	2001	00915-41010	WASHER-PLAIN	7	50	WAGON & VAN					
	2101	77770-89913	RIVET	7	10	WAGON & VAN					
	2201	62500-E3200	ASSY-PAD CORE SUPPORT	1	1	WAGON & VAN			Y	Y	62500-E0100
	2301	62511-E0100	SUPPORT-PAD CORE UPPER	1	1	WAGON & VAN					
	2401	62516-E0100	ASSY-STAY R/C SUPPORT	1	1	WAGON & VAN					
	2501	00114-41662	BOLT-WITH SP LOCK WASHER	1	50	WAGON & VAN					
*	2601	62531-E0100	RUBBER-SEALING PAD	1	5	WAGON & VAN					
	02	62531-E0101	RUBBER-SEALING PAD	1	5	WAGON & VAN			C	N	62531-E0100
	2701	62532-E0100	RETAINER-SEALING PAD	1	5	WAGON & VAN					
	2801	96815-B0700	RIVET-CANOE	4	10.	WAGON & VAN					
*	2901	63840-73000	COMP-HOOD BUMPER	2	5	WAGON & VAN					
	02	63840-46B00	COMP-HOOD BUMPER	2	10	WAGON & VAN			Y	N	63840-73000
	3001	00911-34410	NUT-LOCK	2	50	WAGON & VAN					
	3101	00916-31410	WASHER-LOCK	2	50	WAGON & VAN					
	3201	62651-E0100	BUMPER-FRONT	1	1	WAGON & VAN					
	3301	62691-E0100	GRILLE-BUMPER FRONT RH	1	1	WAGON & VAN					
	3401	62692-E0100	GRILLE-BUMPER FRONT LH	1	1	WAGON & VAN					
	3501	62681-E0100	ASSY-STAY FRONT BUMPER RH	1	1	WAGON & VAN					
	3601	62682-E0100	ASSY-STAY FRONT BUMPER LH	1	1	WAGON & VAN					
	3701	62676-E0150	ASSY-BRACKET FRONT BUMPER SIDE RH	1	5	WAGON & VAN		0969			

NOTE:

© 1972 NISSAN MOTOR CO., LTD.

REVISED: DECEMBER, 1972
PRINTED IN JAPAN

RADIATOR GRILLE & FRONT BUMPER (W & V)

S	KEY NO.	PART NO.	DESCRIPTION	Q'TY	UNIT PKG FOR DIST.	APPLIED MODEL	APPLIED DATE FROM	APPLIED DATE UP TO	ICA N	ICA F	SUPERSEDED
●	3702	62676-E0100	ASSY-BRACKET FRONT BUMPER SIDE RH	1	5	WAGON & VAN	1069				
	03	62676-E0150	ASSY-BRACKET FRONT BUMPER SIDE RH	1	5	WAGON & VAN			Y	N	62676-E0100
	3801	62677-E0150	ASSY-BRACKET FRONT BUMPER SIDE LH	1	5	WAGON & VAN					
●	02	62677-E0100	ASSY-BRACKET FRONT BUMPER SIDE LH	1	5	WAGON & VAN					
	03	62677-E0150	ASSY-BRACKET FRONT BUMPER SIDE LH	1	5	WAGON & VAN			Y	N	62677-E0100
	3901	62666-73000	ASSY-BOLT BUMPER	6	10	WAGON & VAN					
	4001	00915-51510	WASHER-PLAIN	6	50	WAGON & VAN					
	4101	00915-21510	WASHER-SPRING	6	50	WAGON & VAN					
	4201	00911-24510	NUT	6	50	WAGON & VAN					
	4301	62666-73000	ASSY-BOLT BUMPER	2	10	WAGON & VAN					
	4401	00915-51510	WASHER-PLAIN	2	50	WAGON & VAN					
	4501	00915-21510	WASHER-SPRING	2	50	WAGON & VAN					
	4601	00911-24510	NUT-HEX 5/16-24	2	50	WAGON & VAN					
	4701	00154-83010	BOLT-POINTED	4	10	WAGON & VAN					
	4801	00915-51810	WASHER-PLAIN	4	50	WAGON & VAN					
	4901	00915-21810	SPRING	4	50	WAGON & VAN					
	5001	00114-52562	BOLT	2		WAGON & VAN					
	5101	64811-58000	WASHER-SPECIAL	2	10	WAGON & VAN					
	5201	00915-21510	WASHER-SPRING	2	50	WAGON & VAN					
	5301	77730-89912	NUT-SPRING	4	50	WAGON & VAN					

NOTE:

© 1972 NISSAN MOTOR CO., LTD.

PRINTED IN JAPAN

RADIATOR GRILLE & FRONT BUMPER (W & V)

S	KEY NO.	PART NO.	DESCRIPTION	Q'TY	UNIT PKG FOR DIST.	APPLIED MODEL	APPLIED DATE FROM	APPLIED DATE UP TO	ICA N	ICA F	SUPERSEDED
	5401	77710-89911	SCREW-TAPPING	4	10	WAGON & VAN					
	5501	62610-E0100	ASSY-PANEL FRONT	1	1	WAGON & VAN					
	5601	00414-01610	SCREW-MACHINE	6	50	WAGON & VAN					
	5701	00915-41010	WASHER-PLAIN	6	50	WAGON & VAN					
	5801	00915-11010	WASHER-SPRING	6	50	WAGON & VAN					

NOTE:

© 1972 NISSAN MOTOR CO., LTD.

REVISED: DECEMBER, 1972
PRINTED IN JAPAN

NOTE

Printed in Japan

NISSAN MOTOR CO., LTD.

FRONT FENDER & HOOD PANEL (W & V)

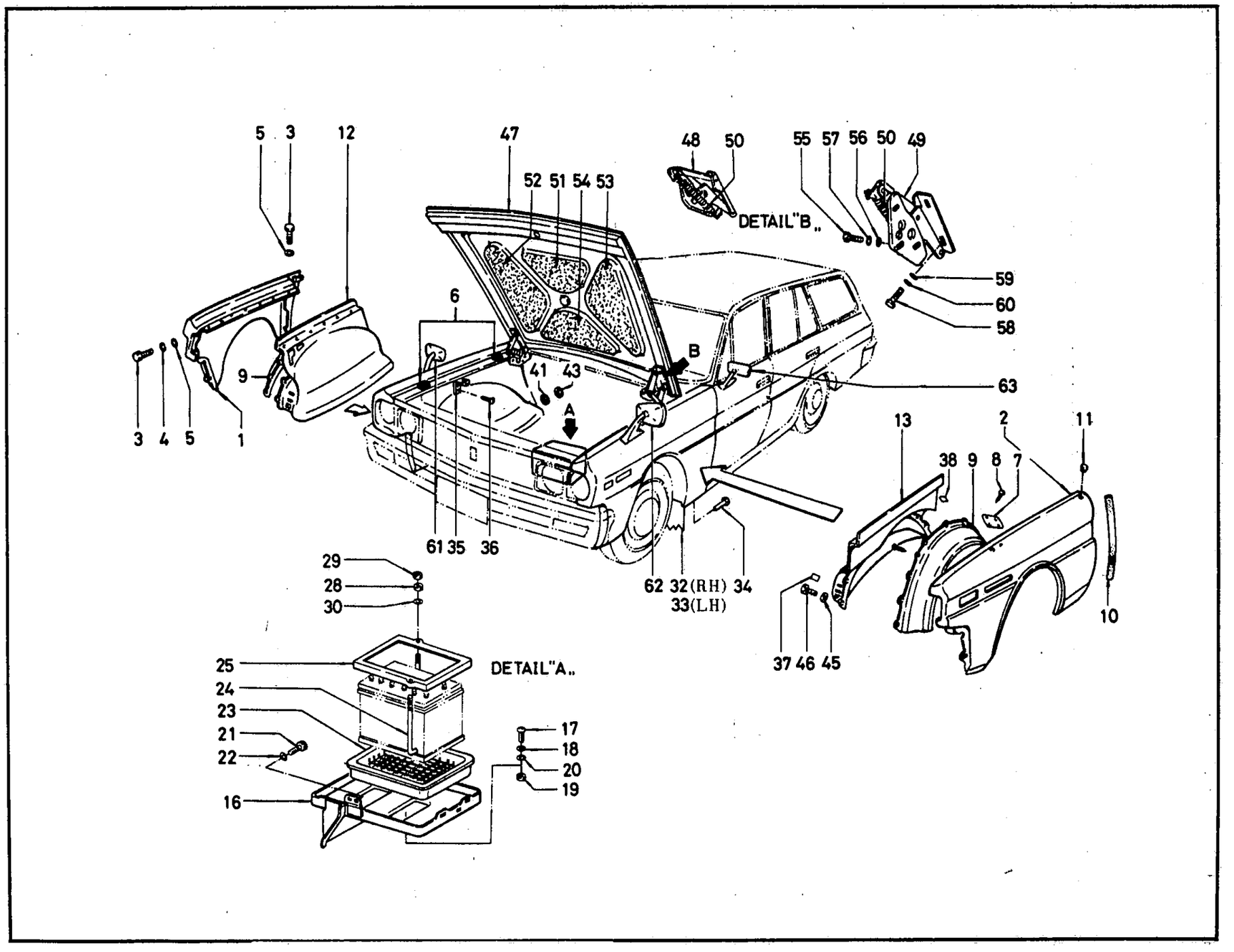

© 1972 NISSAN MOTOR CO., LTD.

REVISED: DECEMBER, 1972

PRINTED IN JAPAN

FRONT FENDER & HOOD PANEL (W & V)

S	KEY NO.	PART NO.	DESCRIPTION	QTY	UNIT PKG FOR DIST.	APPLIED MODEL	APPLIED DATE FROM	APPLIED DATE UP TO	ICA N	ICA F	SUPERSEDED
	101	63100-E1331	ASSY-FRONT FENDER RH	1	2	WAGON & VAN		0969	Y	Y	63101-E1400
	201	63101-E1331	ASSY-FRONT FENDER LH	1	2	WAGON & VAN		0969	Y	Y	63100-E1331
	301	00114-41610	BOLT	44	50	WAGON & VAN					
	401	00915-11410	WASHER-SPRING	44	50	WAGON & VAN					
	501	00915-41410	WASHER-PLAIN	38	50	WAGON & VAN					
	02	00915-51410	WASHER-PLAIN	6	50	WAGON & VAN					
	601	63845-E0101	BUMPER-HOOD SIDE	4	10	WAGON & VAN					
	701	63858-E0100	COVER-ANT HOLE	1	5	WAGON & VAN					
	801	00514-01010	SCREW-TAPPING	4	50	WAGON & VAN					
	901	63860-E0100	SEAL-WHEEL HOUSE	2	5	WAGON & VAN					
	1001	63146-73000	RUBBER-FRONT FENDER RR	4	5	WAGON & VAN					
	1101	77700-89919	PLUG-ANTENNA HOLE 25	1	10	WAGON & VAN					
*	1201	64100-E0100	ASSY-HOOD LEDGE RH	1	1	WAGON & VAN					
	02	64100-E3200	ASSY-HOOD LEDGE RH	1	1	WAGON & VAN	1069				
*	1301	64101-E0100	ASSY-HOODLEDGE LH	1	1	WAGON & VAN					
	02	64101-E3200	ASSY-HOODLEDGE LH	1	1	WAGON & VAN	1069		Y	N	64101-E0100
	1401	63150-E0100	ASSY-WHEEL HOUSE FRONT RH	1	1	WAGON & VAN					
	1501	63151-E0100	ASSY-WHEEL HOUSE FRONT LH	1	1	WAGON & VAN					
	1601	24420-E1101	ASSY-BATTERY SUPPORT	1	1	WAGON & VAN		0969			
	02	24420-E3201	ASSY-BATTERY SUPPORT	1	1	WAGON & VAN	1069				
	1701	00314-41610	SCREW-MACHINE	1	50	WAGON & VAN					
	1801	00915-11410	WASHER-SPRING	1	50	WAGON & VAN					
	1901	00911-14410	NUT-HEX	1	50	WAGON & VAN					

NOTE:

© 1972 NISSAN MOTOR CO., LTD.

PRINTED IN JAPAN

FRONT FENDER & HOOD PANEL (W & V)

S	KEY NO.	PART NO.	DESCRIPTION	QTY	UNIT PKG FOR DIST.	APPLIED MODEL	APPLIED DATE FROM	APPLIED DATE UP TO	ICA N	ICA F	SUPERSEDED
	2001	00915-51410	WASHER-PLAIN	1	50	WAGON & VAN					
	2101	00369-41615	SCREW-MACHINE WITH LOCK WASHER	4		WAGON & VAN					
	2201	00915-51410	WASHER-PLAIN	4	50	WAGON & VAN					
●	2301	24428-20500	TRAY-BATTERY	1	1	WAGON & VAN					
	02	24428-89900	TRAY-BATTERY	1	1	WAGON & VAN			Y	N	24428-20500
	03	24428-E0101	TRAY-BATTERY	1	1	WAGON & VAN					
	2401	24423-35001	ROD-BATTERY FIX	2	5	WAGON & VAN					
	2501	24420-14800	ASSY-FRAME BATTERY FIX	1	1	WAGON & VAN					
	2601	24425-73000	ASSY-BAR BATTERY FIXING	1	1	WAGON & VAN					
	2701	24429-73501	COVER-BATTERY	1	1	OP WAGON & VAN					
	2801	00911-34410	NUT-LOCK	2	50	WAGON & VAN					
	2901	00911-14410	NUT	2	50	WAGON & VAN					
	3001	00915-51410	WASHER-PLAIN	2	50	WAGON & VAN					
	3101	64836-73001	COVER-VOLTAGE REGULATOR	1	1	OP L DRIVE					
	3201	64836-E0101	SPLASH-RUBBER HOOD LEDGE RH	1	1	WAGON & VAN RD OP LD					
	3301	64837-E0101	SPLASH-RUBBER HOOD LEDGE LH	1	1	WAGON & VAN R DRIVE					
	02	64837-E1200	SPLASH-RUBBER HOOD LEDGE LH	1	1	WAGON & VAN L DRIVE					
	3401	96815-80700	RIVET	12	10	WAGON & VAN					
●	3501	64838-E0101	ASSY-BRACKET FUEL STRAINER	1	5	WAGON & VAN					
	02	16419-28200	ASSY-BRKT FUEL STRAINER	1	5	WAGON & VAN			Y	N	64838-E0101
●	3601	00911-01010	SCREW-TAPPING	2	50	WAGON & VAN					

NOTE:

© 1972 NISSAN MOTOR CO., LTD.

REVISED: DECEMBER, 1972
PRINTED IN JAPAN

FRONT FENDER & HOOD PANEL (W & V)

S	KEY NO.	PART NO.	DESCRIPTION	QTY	UNIT PKG FOR DIST.	APPLIED MODEL	APPLIED DATE FROM	APPLIED DATE UP TO	ICA N	ICA F	SUPERSEDED
	3602	00511-01012	SCREW-TAPPING	2		WAGON & VAN			Y	N	00511-01010
	3701	64803-E0100	COVER-HOOD LEDGE HOLE FRONT	1	5	WAGON & VAN					
	3801	64804-E0100	COVER-HOOD LEDGE HOLE REAR	1	5	WAGON & VAN					
	3901	00514-01310	SCREW-TAPPING TYPE B	3	50	WAGON & VAN					
	4001	64836-69000	COVER-VOLTAGE REGULATOR	1	1	WAGON & VAN					
	4101	77700-89916	PLUG-RUBBER 45	1	10	WAGON & VAN					
	4201	00314-40810	SCREW-MACHINE	7	50	WAGON & VAN					
	02	00314-40812	SCREW-MACHINE	7	1	WAGON & VAN			Y	N	00314-40810
	4301	64821-32200	PLUG-10 LOCATE HOLE	2	50	WAGON & VAN					
	4401	64840-E0100	ASSY-STAY EXTEN H/L	2	1	WAGON & VAN					
	4501	00915-51410	WASHER-PLAIN 1/4 TYPE 2	4	50	WAGON & VAN					
	4601	00114-42565	BOLT-HEX WITH LOCK WASHER 1/4-28	4	50	WAGON & VAN					
	4701	65100-E0130	ASSY-HOOD	1	1	WAGON & VAN					
	4801	65400-E0125	ASSY-HOOD HINGE RH	1	1	WAGON & VAN			Y	Y	65400-E0100
	4901	65401-E0125	ASSY-HOOD HINGE LH	1	1	WAGON & VAN			Y	Y	65401-E0100
	5001	65410-E0199	SPRING-HOOD HINGE	2	2	WAGON & VAN					
	5101	65820-E0100	INSULATOR-HOOD A	1	1	WAGON & VAN					
	5201	65821-E0100	INSULATOR HOOD B	1	1	WAGON & VAN					
	5301	65822-E0100	INSULATOR-HOOD C	1	1	WAGON & VAN					
	5401	65823-E0100	INSULATOR-HOOD D	1	1	WAGON & VAN					
	5501	00144-62010	BOLT-POINTED	6	50	WAGON & VAN					
	5601	00915-41610	WASHER-PLAIN	6	50	WAGON & VAN					

NOTE:

© 1972 NISSAN MOTOR CO., LTD.

PRINTED IN JAPAN

FRONT FENDER & HOOD PANEL (W & V)

S	KEY NO.	PART NO.	DESCRIPTION	QTY	UNIT PKG FOR DIST.	APPLIED MODEL	APPLIED DATE FROM	APPLIED DATE UP TO	ICA N	ICA F	SUPERSEDED
	5701	- 00915-11610	WASHER-SPRING	6	50	WAGON & VAN					
	5801	- 00144-52010	BOLT-POINTED	4	50	WAGON & VAN					
	5901	- 00915-41510	WASHER-PLAIN	4	50	WAGON & VAN					
	6001	- 00915-11510	WASHER-SPRING	4	50	WAGON & VAN					
	6101	- 96301-E0100	ASSY-BACK MIRROR RH	1	5	WAGON & VAN					
	6201	- 96302-E0100	ASSY-BACK MIRROR LH	1	5	WAGON & VAN					
	6301	- 96301-10800	ASSY-BACK MIRROR DOOR FIX	1	1	OP L DRIVE					

NOTE:

© 1972 NISSAN MOTOR CO., LTD.

REVISED: DECEMBER, 1972
PRINTED IN JAPAN
C

NOTE

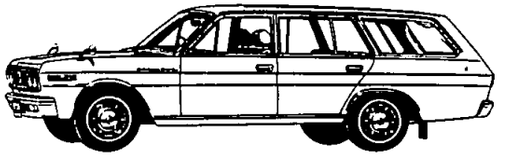

Printed in Japan

NISSAN MOTOR CO., LTD.

HOOD LOCK CONTROL (W & V R DRIVE)

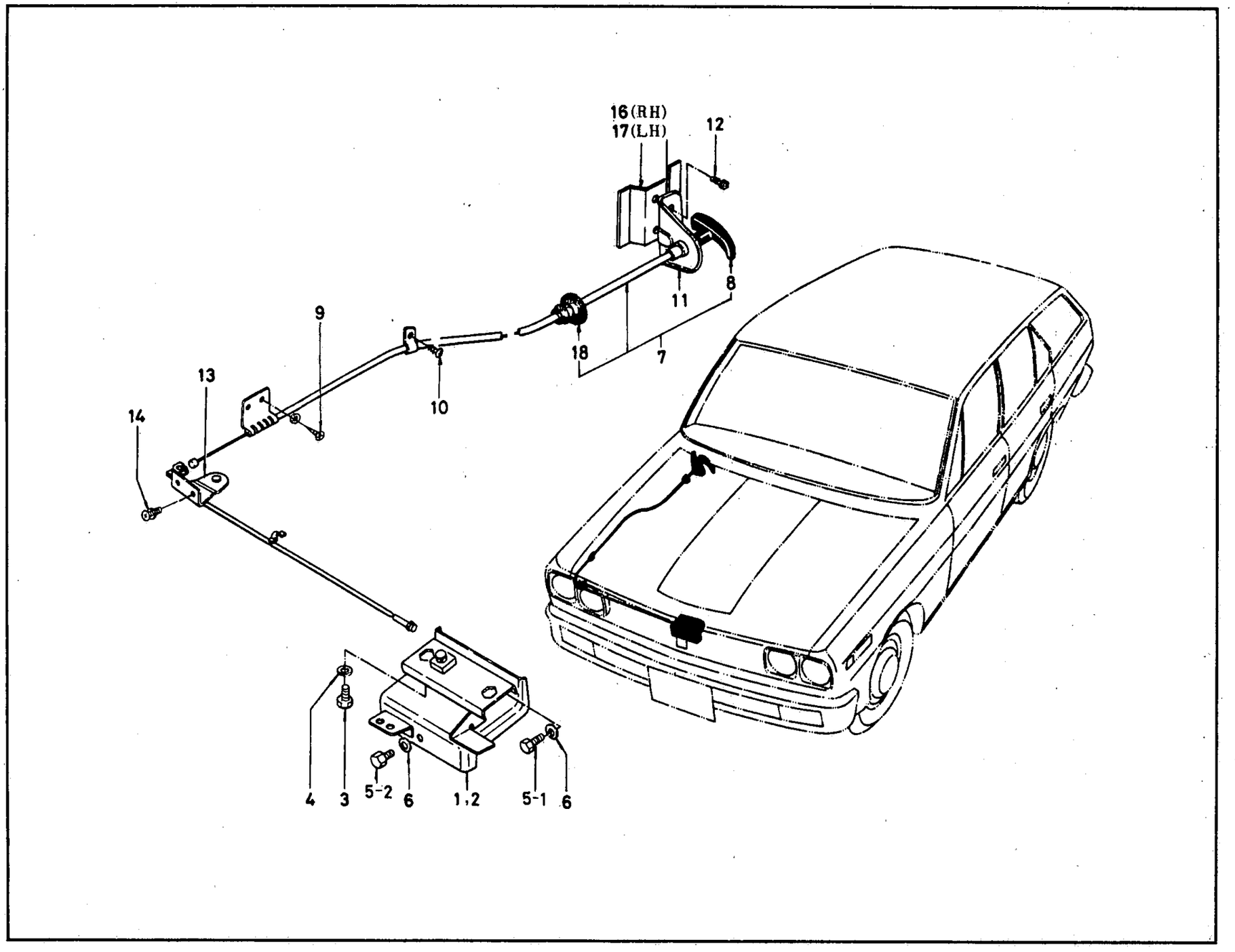

ILLUSTRATION **244-1**

© 1972 NISSAN MOTOR CO., LTD.

REVISED: DECEMBER, 1972

PRINTED IN JAPAN

HOOD LOCK CONTROL (W & V L DRIVE)

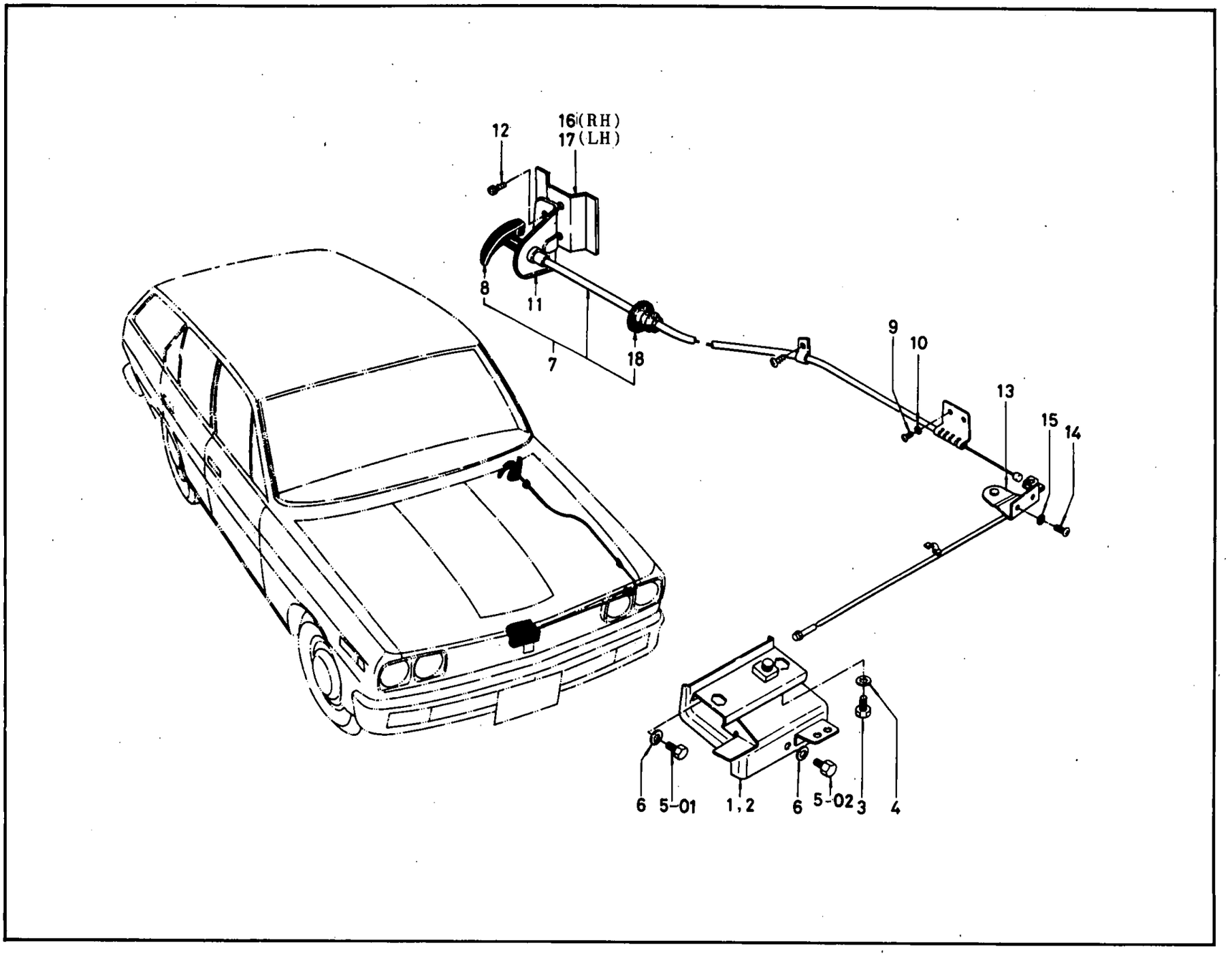

© 1972 NISSAN MOTOR CO., LTD.

PRINTED IN JAPAN

HOOD LOCK CONTROL (W & V)

S	KEY NO.	PART NO.	DESCRIPTION	Q'TY	UNIT PKG FOR DIST.	APPLIED MODEL	APPLIED DATE FROM	APPLIED DATE UP TO	ICA N	ICA F	SUPERSEDED
	101	65601-E0100	ASSY-HOOD LOCK MALE	1	1	WAGON & VAN					
	201	65610-E0100	ASSY-HOOD LOCK FEMALE	1	1	WAGON & VAN R DRIVE					
	02	65610-E1100	ASSY-HOOD LOCK FEMALE	1	1	WAGON & VAN L DRIVE					
	301	00114-42062	BOLT-MALE FIX	2		WAGON & VAN					
	02	00314-41614	BOLT-MALE FIX	2	50	WAGON & VAN					
	401	00915-51410	WASHER-PLAIN	2	50	WAGON & VAN					
	501	00114-41262	BOLT-FEMALE FIX	2		WAGON & VAN					
	02	00114-41662	BOLT-FEMALE FIX	1	50	WAGON & VAN					
	03	00314-41614	BOLT-FEMALE FIX	3	50	WAGON & VAN					
	601	00915-51410	WASHER-PLAIN	3	50	WAGON & VAN					
	701	65701-E0100	COMP-CABLE HOOD LOCK CONTROL	1	5	WAGON & VAN R DRIVE					
	02	65701-E1100	COMP-CABLE HOOD LOCK CONTROL	1	5	WAGON & VAN L DRIVE					
	801	65649-10600	ASSY-HANDLE HOOD LOCK CONTROL	1	5	WAGON & VAN					
	02	65649-E2000	ASSY-HANDLE HOOD LOCK CONTROL	1	5	WAGON & VAN					
	901	00514-01010	SCREW-TAPPING	2	50	WAGON & VAN					
	1001	00514-01010	SCREW-TAPPING	1	50	WAGON & VAN					
	1101	65712-E0100	BRACKET-HOOD LOCK CONTROL HANDLE	1	5	WAGON & VAN					
	1201	00314-41214	SCREW-WITH SPRING WASHER	2		WAGON & VAN					
	1301	65705-E0100	ASSY-ROD HOOD LOCK CONTROL	1	1	WAGON & VAN R DRIVE					

NOTE:

© 1972 NISSAN MOTOR CO., LTD.

ILLUSTRATION **244**

REVISED: DECEMBER, 1972

PRINTED IN JAPAN

C

HOOD LOCK CONTROL (W & V)

S	KEY NO.	PART NO.	DESCRIPTION	QTY	UNIT PKG FOR DIST.	APPLIED MODEL	APPLIED DATE FROM	APPLIED DATE UP TO	ICA N	ICA F	SUPERSEDED
	1302	65705-E1100	ASSY-ROD HOOD LOCK CONTROL	1	1	WAGON & VAN L DRIVE					
	1401	00314-01014	SCREW-WITH SPRING WASHER	2		WAGON & VAN					
	1501	00915-41010	WASHER-PLAIN	2	50	WAGON & VAN					
	1601	66415-E0100	SUPPORT-HOOD LOCK CONTROL RH	1	5	WAGON & VAN					
	1701	66416-E0100	SUPPORT-HOOD LOCK CONTROL LH	1	5	WAGON & VAN					
	1801	24256-36700	GROMMET-RUBBER	1	10	WAGON & VAN					

NOTE:

© 1972 NISSAN MOTOR CO., LTD.

PRINTED IN JAPAN

NOTE

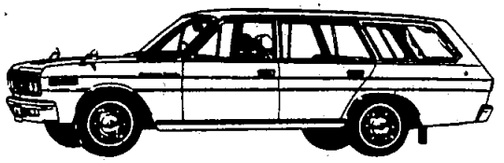

NOTE

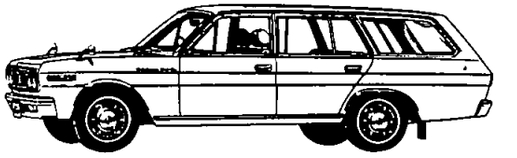

Printed in Japan

NISSAN MOTOR CO., LTD.

COWL PANEL & FITTING (W & V)

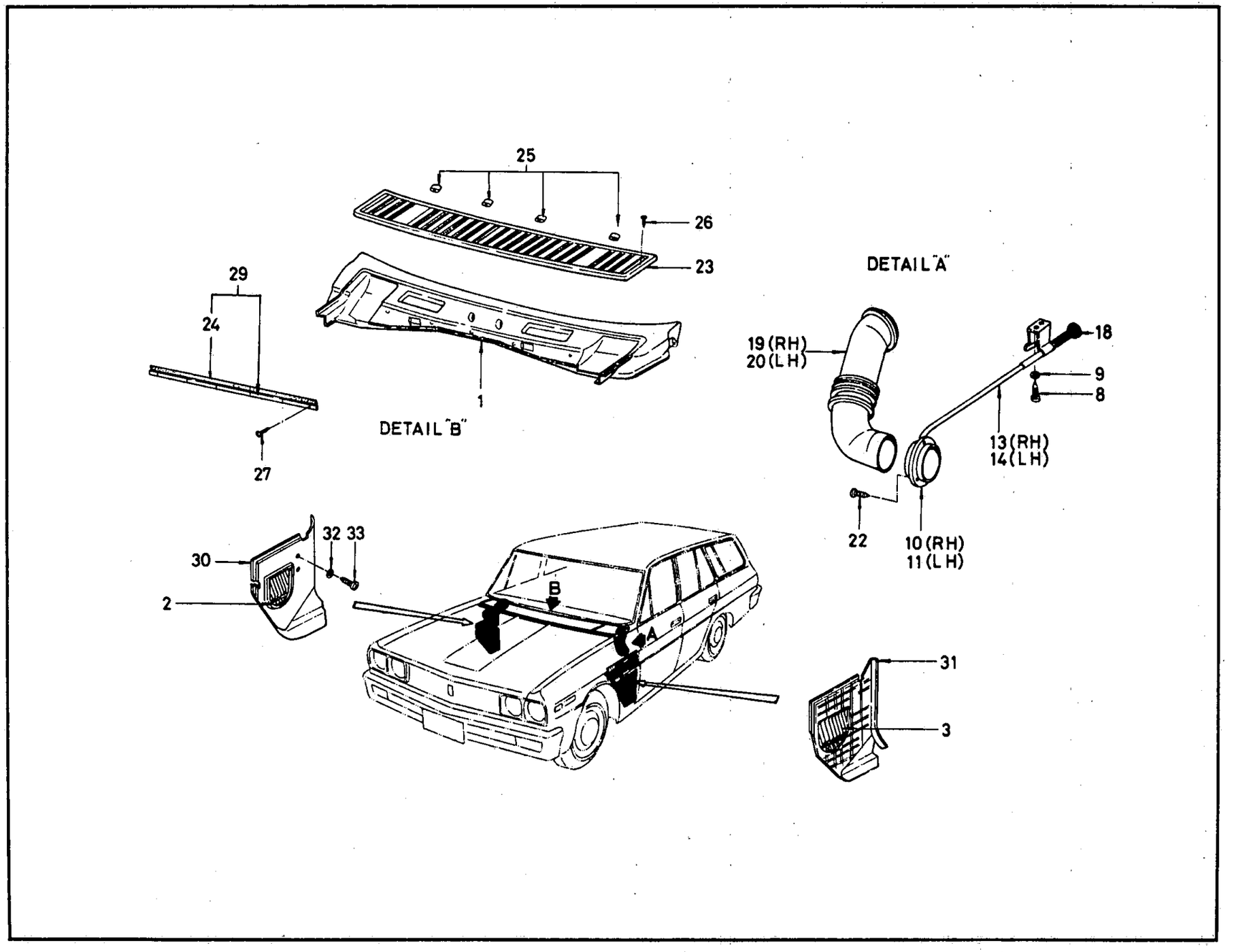

© 1972 NISSAN MOTOR CO., LTD.

REVISED: DECEMBER, 1972

PRINTED IN JAPAN

C

COWL PANEL & FITTING (W & V)

S	KEY NO.	PART NO.	DESCRIPTION	QTY	UNIT PKG FOR DIST.	APPLIED MODEL	APPLIED DATE FROM	APPLIED DATE UP TO	ICA N	ICA F	SUPERSEDED
	101	66300-E0130	ASSY-COWL TOP	1	1	R DRIVE					
	02	66300-F1130	ASSY-COWL TOP	1	1	L DRIVE					
•	201	66501-73000	ASSY-AIR VENT RH	1		WAGON & VAN					
	02	66512-73050	ASSY-AIR VENT RH	1	1	WAGON & VAN			Y	N	66501-73000
•	301	66502-73000	ASSY-AIR VENT LH	1		WAGON & VAN					
	02	66512-73050	ASSY-AIR VENT LH	1	1	WAGON & VAN			Y	N	66502-73000
	401	66512-73050	ASSY-CASE AIR VENT WITH PACKING	2	1	WAGON & VAN					
	501	66513-73000	PACKING-AIR VENT	2	1	WAGON & VAN					
•	601	00510-81310	SCREW-TAPPING #8AX13	2	50	WAGON & VAN					
	02	00510-81312	SCREW-TAPPING #8AX13	2	50	WAGON & VAN			Y	N	00510-81310
•	701	00511-01010	SCREW-TAPPING #10X10	6	50	WAGON & VAN					
	02	00511-01012	SCREW-TAPPING #10X10	6	50	WAGON & VAN			Y	N	00511-01010
	801	68685-36700	SCREW-MACHINE #10-32X12	2	50	WAGON & VAN					
	901	66534-73000	WASHER-SPRING LOCK #10	2	50	WAGON & VAN					
	1001	66539-E0101	ASSY-VALVE 2ND VENT RH	1	1	WAGON & VAN					
	1101	66540-F0101	ASSY-VALVE 2ND VENT LH	1	1	WAGON & VAN					
	1201	66514-73000	ASSY-VALVE AIR VENT	2	1	WAGON & VAN					
	1301	66545-E0101	ASSY-CABLE 2ND VENT RH	1	5	WAGON & VAN					
	1401	66546-F0101	ASSY-CABLE 2ND VENT LH	1	5	WAGON & VAN					
	1501	66532-F0101	ASSY-CABLE AIR VENT	2	5	WAGON & VAN					
	1601	08310-41214	SCREW-MACHINE WITH WASHER	1	50	WAGON & VAN					
	1701	66562-E0100	ASSY-KNOB AIR VENT	2	5	WAGON & VAN					

NOTE:

PRINTED IN JAPAN

© 1972 NISSAN MOTOR CO., LTD.

COWL PANEL & FITTING (W & V)

S	KEY NO.	PART NO.	DESCRIPTION	QTY	UNIT PKG FOR DIST.	APPLIED MODEL	APPLIED DATE FROM	APPLIED DATE UP TO	ICA N	ICA F	SUPERSEDED
	1801	66563-E0100	ASSY-KNOB 2ND AIR VENT	2	5	WAGON & VAN					
	1901	66554-E0100	DUCT-2ND VENT RH	1	1	WAGON & VAN					
	2001	66555-E0100	DUCT-2ND VENT LH	1	1	R DRIVE					
	02	66555-E1200	DUCT-2ND VENT LH	1	1	L DRIVE					
	2101	66590-E0100	COVER-2ND VENT HOLE	2	5	WAGON & VAN OP R DRIVE					
*	2201	00511-01010	SCREW-TAPPING #10X10	6	50	WAGON & VAN					
	02	00511-01012	SCREW-TAPPING #10X10	6	50	WAGON & VAN			Y	N	00511-01010
	2301	66801-E0151	GRILLE-COWL TOP	1	1	R DRIVE					
	02	66801-E1151	GRILLE-COWL TOP	1	1	L DRIVE					
	2401	66822-E0101	SEALING-RUBBER COWL TOP	2	5	WAGON & VAN			Y	Y	66822-E0100
	2501	66312-10600	CAP-COWL GRILLE CLIP	4	10	WAGON & VAN					
	2601	77710-89913	SCREW-TAPPING #6BX16	2	50	WAGON & VAN					
	2701	00510-61310	SCREW-TAPPING #6AX13	8	50	WAGON & VAN					
	2801	00915-46610	WASHER-PLAIN #6	2	50	WAGON & VAN					
	2901	66810-F0100	ASSY-RUBBER COWL TOP	1	1	WAGON & VAN					
	3001	66900-F0100	FINISH-DASH SIDE RH	1	1	WAGON & VAN					
	3101	66901-E4900	FINISH-DASH SIDE LH	1	1	WAGON & VAN			Y	Y	66901-E0100
	3201	66900-E0101	FINISH-DASH SIDE RH	1	1	WAGON & VAN					
	3301	66901-E4901	FINISH-DASH SIDE LH	1	1	WAGON & VAN			Y	Y	66901-E0101
	3401	66900-F0102	FINISH-DASH SIDE RH	1	1	WAGON & VAN					
	3501	66901-E4902	FINISH-DASH SIDE LH	1	1	WAGON & VAN			Y	Y	66901-E0102
	3601	66900-E0103	FINISH-DASH SIDE RH	1	1	WAGON & VAN					

NOTE:

© 1972 NISSAN MOTOR CO., LTD.

REVISED: DECEMBER, 1972
PRINTED IN JAPAN

COWL PANEL & FITTING (W & V)

S	KEY NO.	PART NO.	DESCRIPTION	QTY	UNIT PKG FOR DIST.	APPLIED MODEL	APPLIED DATE FROM	APPLIED DATE UP TO	ICA N	ICA F	SUPERSEDED
	3701	66901-E4903	FINISH-DASH SIDE LH	1	1	WAGON & VAN			Y	Y	66901-E0103
	3801	66900-E0500	FINISH-DASH SIDE RH	1	1	WAGON & VAN					
	3901	66901-E4904	FINISH-DASH SIDE LH	1	1	WAGON & VAN			Y	Y	66901-E0500
	4001	00915-41442	PLAIN WASHER	2	50	WAGON & VAN					
	4101	00414-41242	SCREW-MACHINE	2	50	WAGON & VAN					

NOTE:

© 1972 NISSAN MOTOR CO., LTD.

PRINTED IN JAPAN

NOTE

NISSAN MOTOR CO., LTD.

Printed in Japan

NOTE

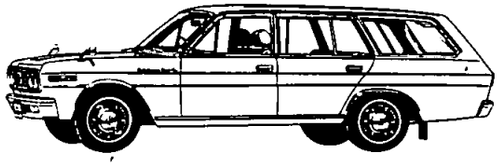

Printed in Japan

NISSAN MOTOR CO., LTD.

DASH PANEL, DASH SIDE PANEL & INSTRUMENT PANEL (W & V R DRIVE)

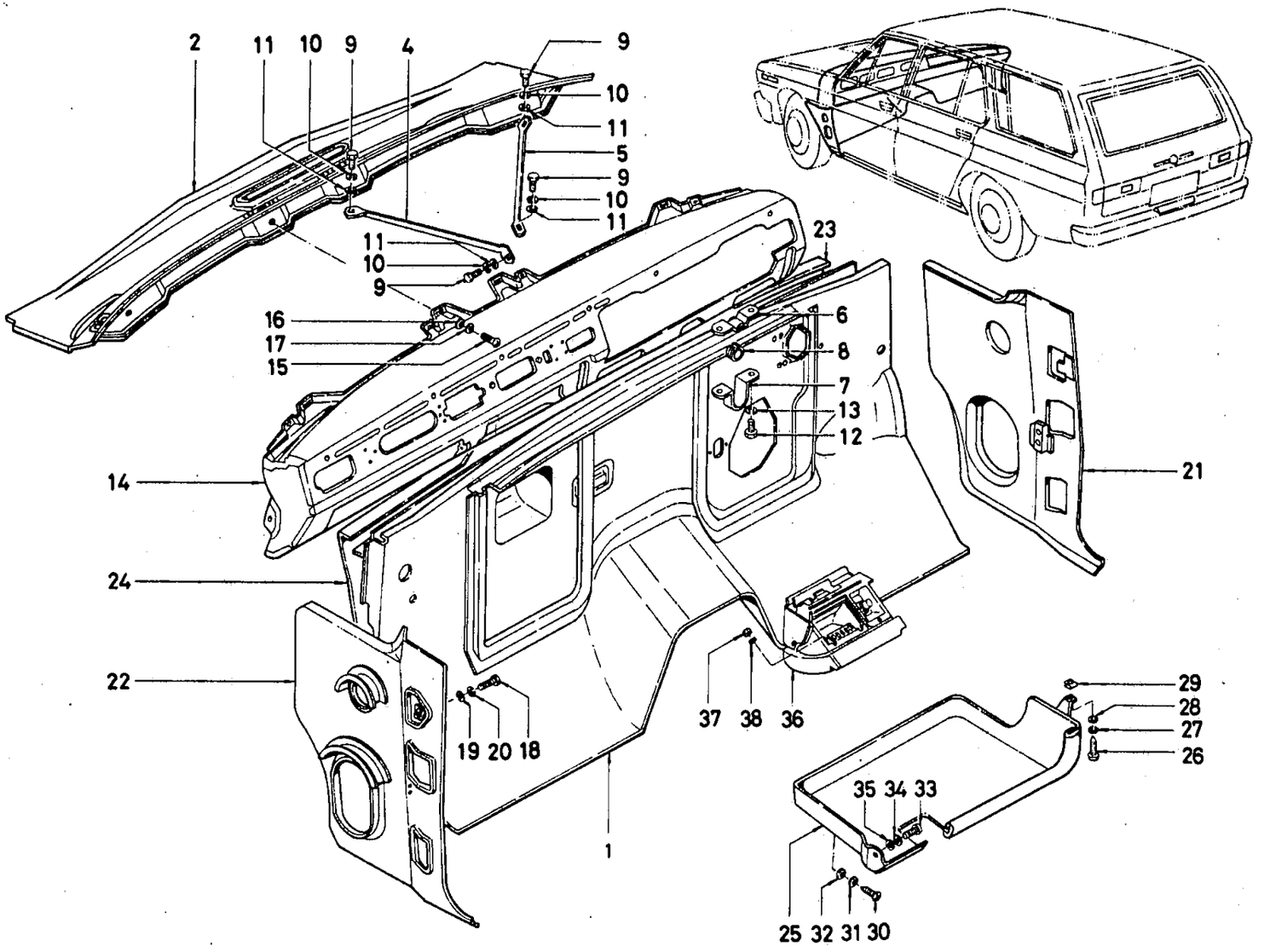

ILLUSTRATION **246**

© 1972 NISSAN MOTOR CO., LTD.

REVISED: DECEMBER, 1972

PRINTED IN JAPAN

DASH PANEL, DASH SIDE PANEL & INSTRUMENT PANEL (W & V R DRIVE)

S	KEY NO.	PART NO.	DESCRIPTION	QTY	UNIT PKG FOR DIST.	APPLIED MODEL	APPLIED DATE FROM	APPLIED DATE UP TO	ICA N	ICA F	SUPERSEDED
	101	67101-E0130	ASSY-PANEL DASH LOWER	1	1	WAGON & VAN R DRIVE					
	02	67101-E3230	ASSY-PANEL DASH LOWER	1	1	WAGON & VAN R DRIVE					
	201	67102-E0130	ASSY-PANEL DASH UPPER	1	1	WAGON & VAN R DRIVE			Y	N	67102-E0100
	301	67116-E0150	ASSY-FRAME WIND SHIELD UPPER & LOWER	1	1	WAGON & VAN R DRIVE					
	401	48324-E0101	STAY-STEERING MOUNTING INNER	1	1	WAGON & VAN R DRIVE					
	501	48325-E0101	STAY-STEERING MOUNTING OUTER	1	1	WAGON & VAN R DRIVE					
	601	48321-E0100	CLAMP-STEERING POST UPPER	1	1	WAGON & VAN R DRIVE					
	701	48322-E0100	CLAMP-STEERING POST LOWER	1	1	WAGON & VAN R DRIVE					
	801	48323-73001	RUBBER STEERING MOUNTING	1	5	WAGON & VAN R DRIVE					
	901	00144-52010	BOLT-POINTED 5/16X20	4	50	WAGON & VAN R DRIVE					
	1001	00915-11510	WASHER-SPRING LOCK	4	50	WAGON & VAN R DRIVE					
	1101	00915-41510	WASHER-PLAIN 5/16	4	50	WAGON & VAN R DRIVE					
	1201	00144-52510	BOLT-POINTED 5/16X25	2		WAGON & VAN R DRIVE					
	1301	00915-11510	WASHER-SPRING LOCK 5/16	2	50	WAGON & VAN R DRIVE					
	1401	68100-E0100	ASSY-PANEL INSTRUMENT	1	1	WAGON & VAN R DRIVE					

NOTE:

© 1972 NISSAN MOTOR CO., LTD.

PRINTED IN JAPAN

DASH PANEL, DASH SIDE PANEL & INSTRUMENT PANEL (W & V R DRIVE)

S	KEY NO.	PART NO.	DESCRIPTION	QTY	UNIT PKG FOR DIST.	APPLIED MODEL	APPLIED DATE FROM	APPLIED DATE UP TO	ICA N	ICA F	SUPERSEDED
	1501	- 00414-41610	SCREW-MACHINE 1/4-28UNF	4	50	WAGON & VAN R DRIVE					
	1601	- 00915-41410	WASHER-PLAIN	4	50	WAGON & VAN R DRIVE					
	1701	- 00915-11410	WASHER-SPRING LOCK 1/4	4	50	WAGON & VAN R DRIVE					
	1801	- 00144-52010	BOLT 5/16-24UNF	2	50	WAGON & VAN R DRIVE					
	1901	- 00915-41510	WASHER-PLAIN 5/16	2	50	WAGON & VAN R DRIVE					
	2001	- 00915-11510	WASHER-SPRING LOCK 5/16	2	50	WAGON & VAN R DRIVE					
	2101	- 66400-E0100	ASSY-PANEL DASH SIDE RH	1	1	WAGON & VAN R DRIVE					
	2201	- 66401-E0100	ASSY-PANEL DASH SIDE LH	1	1	WAGON & VAN R DRIVE					
	2301	- 66408-E0100	ASSY-PANEL AIR BOX RH	1	1	WAGON & VAN R DRIVE					
	2401	- 66409-E0100	ASSY-PANEL AIR BOX LH	1	1	WAGON & VAN R DRIVE					
	2501	- 96800-E0100	ASSY-PACKAGE TRAY	1	1	WAGON & VAN R DRIVE					
	2601	- 00511-01342	SCREW-TAPPING #10	1	50	WAGON & VAN R DRIVE					
	2701	- 00915-11040	WASHER-SPRING LOCK #10	1	50	WAGON & VAN R DRIVE					
	2801	- 62328-32200	WASHER-SPECIAL	1	10	WAGON & VAN R DRIVE					
	2901	- 08963-10540	NUT-SPRING #10	1		WAGON & VAN R DRIVE					

NOTE:

© 1972 NISSAN MOTOR CO., LTD.

REVISED: DECEMBER, 1972
PRINTED IN JAPAN

DASH PANEL, DASH SIDE PANEL & INSTRUMENT PANEL (W & V R DRIVE)

S	KEY NO.	PART NO.	DESCRIPTION	QTY	UNIT PKG FOR DIST.	APPLIED MODEL	APPLIED DATE FROM	APPLIED DATE UP TO	ICA N	ICA F	SUPERSEDED
	3001	00511-01942	SCREW TAPPING #10	2		WAGON & VAN R DRIVE					
	3101	00915-11040	WASHER	2	50	WAGON & VAN R DRIVE					
	3201	62328-32200	WASHER-SPECIAL	2	10	WAGON & VAN R DRIVE					
	3301	00314-41642	SCREW-MACHINE	1	50	WAGON & VAN R DRIVE					
	3401	00915-11410	WASHER-LOCK SPRING	1	50	WAGON & VAN R DRIVE			Y	N	00915-11440
	3501	00915-51410	WASHER-PLAIN	1	50	WAGON & VAN R DRIVE			Y	N	00915-51440
	3601	68800-E0100	COMP-ASH TRAY INST	1	1	WAGON & VAN R DRIVE					
	3701	08911-10410	NUT HEX	4	50	WAGON & VAN R DRIVE					
	3801	08915-13410	SPRING-ROCK WASHER	4	50	WAGON & VAN R DRIVE					

NOTE:

© 1972 NISSAN MOTOR CO., LTD.

PRINTED IN JAPAN

NOTE

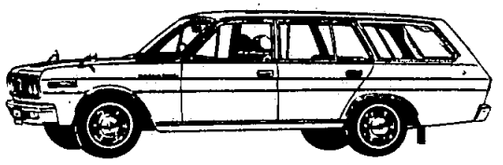

NOTE

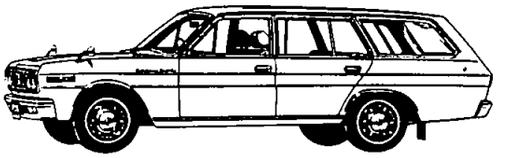

Printed in Japan

NISSAN MOTOR CO., LTD.

DASH PANEL, DASH SIDE PANEL & INSTRUMENT PANEL (W & V L DRIVE)

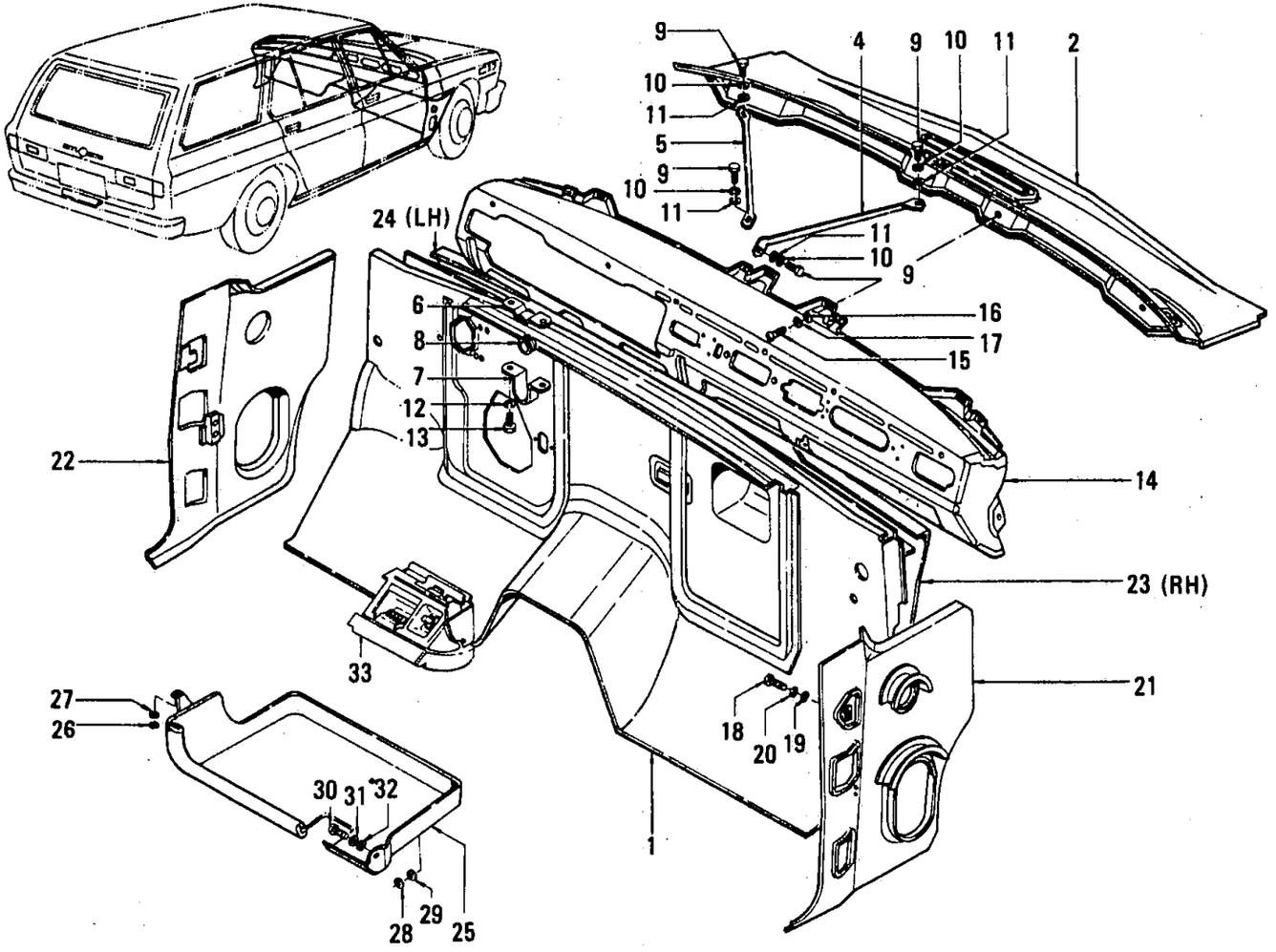

ILLUSTRATION **246A**

© 1972 NISSAN MOTOR CO., LTD.

REVISED: DECEMBER, 1972

PRINTED IN JAPAN

DASH PANEL, DASH SIDE PANEL & INSTRUMENT PANEL (W & V L DRIVE)

S	KEY NO.	PART NO.	DESCRIPTION	Q'TY	UNIT PKG FOR DIST.	APPLIED MODEL	APPLIED DATE FROM	APPLIED DATE UP TO	ICA N	ICA F	SUPERSEDED
*	101	67101-E1130	ASSY-PANEL DASH LOWER	1	1	W & V L DRIVE					
*	201	67102-E1130	ASSY-PANEL DASH UPPER	1	1	W & V L DRIVE			Y	Y	67102-E1100
	301	67116-E0150	ASSY-FRAME WIND SHELD	1	1	W & V L DRIVE					
	401	48324-E1100	ASSY-STAY STEERING MOUNTING INNER	1	1	W & V L DRIVE					
	501	48325-E1100	ASSY-STAY STEERING MOUNTING OUTER	1	1	W & V L DRIVE					
	601	48321-E0100	CLAMP-STEERING POST UPPER	1	1	W & V L DRIVE					
	701	48322-E0100	CLAMP-STEERING POST LOWER	1	1	W & V L DRIVE					
	801	48323-73001	RUBBER STEERING MOUNTING	1	5	W & V L DRIVE					
	901	00144-52010	BOLT-POINTED 5/16	4	50	W & V L DRIVE					
	1001	00915-11510	WASHER-SPRING LOCK 5/16	4	50	W & V L DRIVE					
	1101	00915-41510	WASHER-PLAIN 5/16	4	50	W & V L DRIVE					
	1201	00915-11510	WASHER-SPRING LOCK 5/16	2	50	W & V L DRIVE					
	1301	00144-53010	BOLT-POINTED 5/16X30	2	50	W & V L DRIVE					
	1401	68100-E1200	ASSY-PANEL LIST	1	1	W & V L DRIVE					
	1501	00414-41610	SCREW-MACHINE 1/4-28	4	50	W & V L DRIVE					
	1601	00915-41410	WASHER-PLAIN 1/4	4	50	W & V L DRIVE					
	1701	00915-11410	WASHER-SPRING LOCK 1/4	4	50	W & V L DRIVE					
	1801	00144-52010	BOLT,5/16-24	2	50	W & V L DRIVE					
	1901	00915-41510	WASHER-PLAIN 5/16	2	50	W & V L DRIVE					
	2001	00915-11510	WASHER-SPRING LOCK 5/16	2	50	W & V L DRIVE					
	2101	66400-E0100	ASSY-PANEL DASH SIDE RH	1	1	W & V L DRIVE					
	2201	66401-E0100	ASSY-PANEL DASH SIDE LH	1	1	W & V L DRIVE					

NOTE:

© 1972 NISSAN MOTOR CO., LTD.

PRINTED IN JAPAN

DASH PANEL, DASH SIDE PANEL & INSTRUMENT PANEL (W & V L DRIVE)

S	KEY NO.	PART NO.	DESCRIPTION	Q'TY	UNIT PKG FOR DIST.	APPLIED MODEL	APPLIED DATE FROM	APPLIED DATE UP TO	ICA N	ICA F	SUPERSEDED
	2301	66408-E0100	ASSY-PANEL AIR BOX RH	1	1	W & V L DRIVE					
	2401	66409-E0100	ASSY-PANEL AIR BOX LH	1	1	W & V L DRIVE					
	2501	96800-E1200	ASSY-PACKAGE TRAY	1	1	W & V L DRIVE					
	2601	00915-11040	WASHER-SPRING LOCK #10	1	50	W & V L DRIVE					
	2701	62328-32200	WASHER-SPECIAL	1	10	W & V L DRIVE					
	2801	00915-11040	WASHER-SPRING LOCK	2	50	W & V L DRIVE					
	2901	62328-32200	WASHER-SPECIAL	2	10	W & V L DRIVE					
	3001	00314-41642	SCREW-MACHINE	1	50	W & V L DRIVE					
	3101	00915-11410	WASHER-SPRING LOCK	1	50	W & V L DRIVE					
	3201	00915-51410	WASHER-PLAIN	1	50	W & V L DRIVE					
	3301	68800-E1200	COMP-ASH TRAY INST	1	1	W & V L DRIVE					

NOTE:

© 1972 NISSAN MOTOR CO., LTD.

REVISED: DECEMBER, 1972

PRINTED IN JAPAN

NOTE

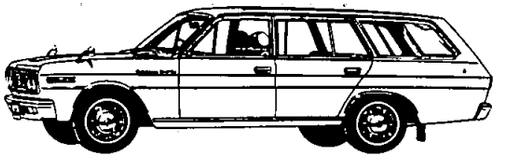

Printed in Japan

NISSAN MOTOR CO., LTD.

DASH & INSTRUMENT TRIMMING (W & V R DRIVE)

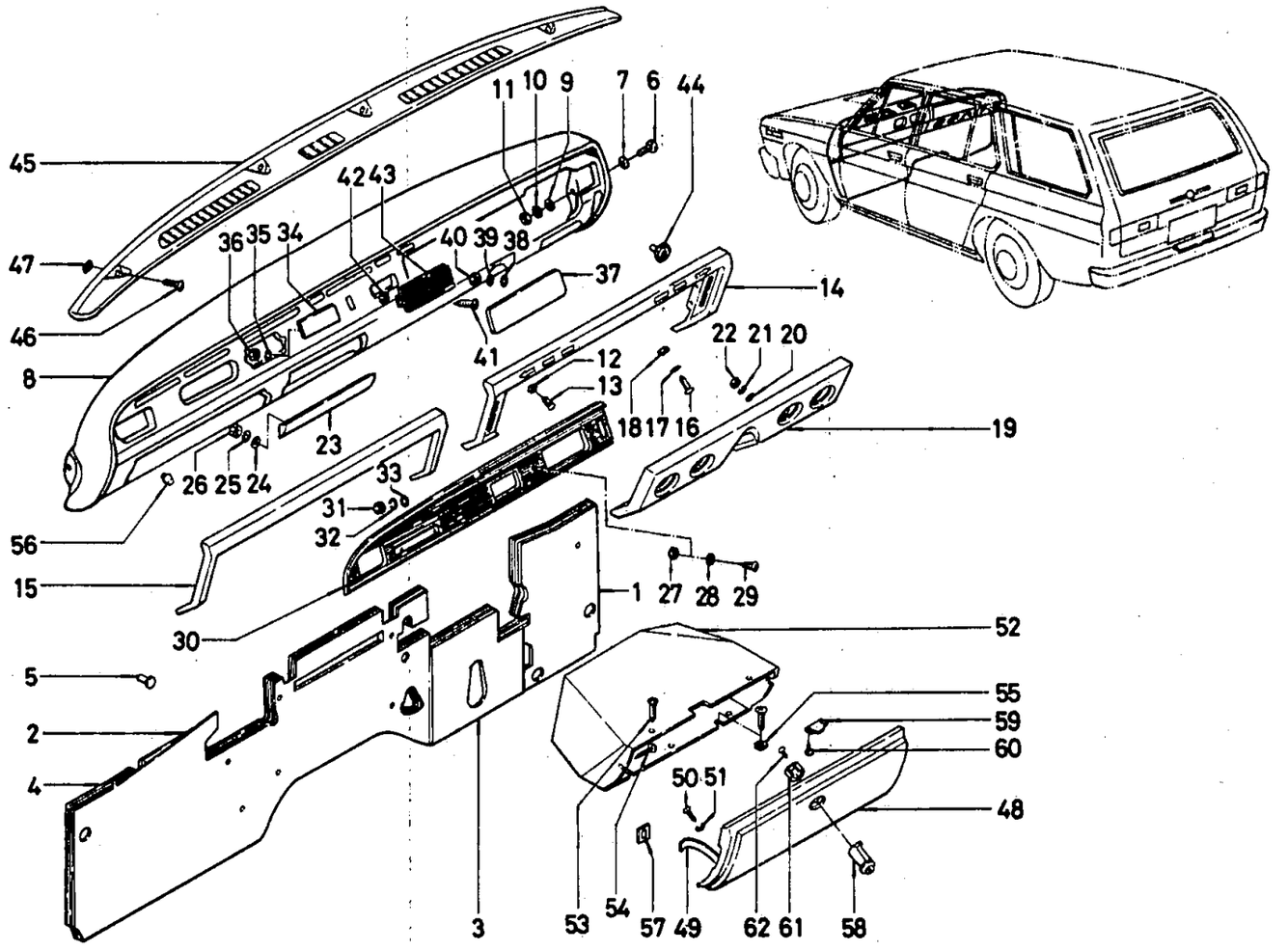

ILLUSTRATION **247**

© 1972 NISSAN MOTOR CO., LTD.

REVISED: DECEMBER, 1972

PRINTED IN JAPAN

DASH & INSTRUMENT TRIMMING (W & V R DRIVE)

S	KEY NO.	PART NO.	DESCRIPTION	QTY	UNIT PKG FOR DIST.	APPLIED MODEL	APPLIED DATE FROM	APPLIED DATE UP TO	ICA N	ICA F	SUPERSEDED
	101	67900-E0100	ASSY-INSULATOR DASH RH	1	1	WAGON & VAN R DRIVE					
	02	67900-E3200	ASSY-INSULATOR DASH RH	1	1	WAGON & VAN R DRIVE					
	201	67901-E0100	ASSY-INSULATOR DASH LH	1	1	WAGON & VAN L DRIVE					
	02	67901-E3400	ASSY-INSULATOR DASH LH	1	1	WAGON & VAN R DRIVE					
	301	67902-E0100	ASSY-INSULATOR DASH CENTER	1	1	WAGON & VAN R DRIVE					
	02	67902-E3200	ASSY-INSULATOR DASH CENTER	1	1	WAGON & VAN R DRIVE					
	401	67901-E0300	ASSY-INSULATOR DASH LH	1	1	WAGON & VAN R DRIVE					
	501	67930-73000	FASTENER-TRIM	5	10	WAGON & VAN EXC DX SUPER					
	601	00114-52010	BOLT	2	50	WAGON & VAN EXC DX SUPER					
	701	00915-51510	WASHER-PLAIN	2	50	WAGON & VAN EXC DX SUPER					
	801	68210-E0100	ASSY-PAD INST UPPER	1	1	WAGON & VAN R DRIVE					
	901	00915-41210	WASHER-PLAIN	6	50	WAGON & VAN R DRIVE					
	1001	00915-11010	WASHER-LOCK	6	50	WAGON & VAN R DRIVE					
	1101	00911-14010	NUT	6	50	WAGON & VAN R DRIVE					
	1201	00918-31010	NUT-SPRING TYPE A	2	50	WAGON & VAN R DRIVE					

NOTE:

© 1972 NISSAN MOTOR CO., LTD.

PRINTED IN JAPAN

DASH & INSTRUMENT TRIMMING (W & V R DRIVE)

S	KEY NO.	PART NO.	DESCRIPTION	Q'TY	UNIT PKG FOR DIST.	APPLIED MODEL	APPLIED DATE FROM	APPLIED DATE UP TO	ICA N	ICA F	SUPERSEDED
	1301	00531-01642	SCREW-TAPPING	2	50	WAGON & VAN R DRIVE					
	1401	68240-E0101	ASSY-PAD INST CENTER NO 1	1	2	WAGON & VAN R DRIVE					
	1501	68250-E0101	ASSY-PAD INST CENTER NO 2	1	1	WAGON & VAN R DRIVE					
	1601	00511-01610	SCREW-TAPPING	2	50	WAGON & VAN R DRIVE					
	1701	00915-41010	WASHER-PLAIN	2	50	WAGON & VAN R DRIVE					
	1801	68295-89900	NUT	2	1	WAGON & VAN R DRIVE					
	1901	68270-E0100	ASSY-PAD INST LOWER RH	1	1	WAGON & VAN R DRIVE					
	2001	00915-41210	WASHER-PLAIN	6	50	WAGON & VAN R DRIVE					
	2101	00915-11010	WASHER-LOCK	6	50	WAGON & VAN R DRIVE					
	2201	00911-14010	NUT	6	50	WAGON & VAN R DRIVE					
	2301	68280-E0100	ASSY-PAD INST LOWER LH	1	1	WAGON & VAN R DRIVE					
	2401	00915-40810	WASHER-PLAIN	3	50	WAGON & VAN R DRIVE					
	2501	00915-10810	WASHER-LOCK SPRING	3	50	WAGON & VAN R DRIVE					
	2601	00911-10810	NUT	3	50	WAGON & VAN R DRIVE					
	2701	68880-89902	NUT	2	10	WAGON & VAN R DRIVE					

NOTE:

© 1972 NISSAN MOTOR CO., LTD.

REVISED: DECEMBER, 1972
PRINTED IN JAPAN

DASH & INSTRUMENT TRIMMING (W & V R DRIVE)

S	KEY NO.	PART NO.	DESCRIPTION	QTY	UNIT PKG FOR DIST.	APPLIED MODEL	APPLIED DATE FROM	APPLIED DATE UP TO	ICA N	ICA F	SUPERSEDED
	2801	00915-41010	WASHER PLAIN	2	50	WAGON & VAN R DRIVE					
	2901	00511-01642	SCREW-TAPPING NO.10	2	50	WAGON & VAN R DRIVE					
	3001	68410-E0301	ASSY-FINISHER	1	2	VAN R DRIVE					
	02	68410-E1700	ASSY-FINISHER	1	2	WAGON & VAN R DRIVE					
	3101	00911-14010	NUT	5	50	WAGON & VAN R DRIVE					
	3201	00915-11010	WASHER-LOCK SPRING	5	50	WAGON & VAN R DRIVE					
	3301	00915-41010	WASHER-PLAIN	5	50	WAGON & VAN R DRIVE					
	3401	68460-E0302	MASK-CLOCK HOLE	1	5	WAGON & VAN R DRIVE					
	3501	00915-11010	WASHER LOCK SPRING	2	50	WAGON & VAN R DRIVE					
	3601	00911-14010	NUT	2	50	WAGON & VAN R DRIVE					
	3701	68470-E0301	ASSY-MASK RADIO APERTURE	1	2	WAGON & VAN R DRIVE					
	3801	00915-51410	WASHER-PLAIN	2	50	WAGON & VAN R DRIVE					
	3901	00915-11010	WASHER-SPRING	2	50	WAGON & VAN R DRIVE					
	4001	00911-14010	NUT	2	50	WAGON & VAN R DRIVE					
	4101	00521-01642	SCREW-TAPPING	2	50	WAGON & VAN R DRIVE					
	4201	68880-89902	NUT	2	10	WAGON & VAN R DRIVE					

NOTE:

© 1972 NISSAN MOTOR CO., LTD.

PRINTED IN JAPAN

DASH & INSTRUMENT TRIMMING (W & V R DRIVE)

S	KEY NO.	PART NO.	DESCRIPTION	QTY	UNIT PKG FOR DIST.	APPLIED MODEL	APPLIED DATE FROM	APPLIED DATE UP TO	ICA N	ICA F	SUPERSEDED
	4301	68490-E0100	MASK-SWITCH HOLE	2	2	WAGON & VAN R DRIVE					
	4401	68877-73000	PUSH-ON FIX 3/8	1	10	WAGON & VAN R DRIVE					
	4501	68310-E0100	GARNISH-INSTRUMENT	1	1	WAGON & VAN R DRIVE					
	4601	00510-61642	SCREW-TAPPING	4	50	WAGON & VAN R DRIVE					
	4701	08964-10710	NUT-SPRING	4	50	WAGON & VAN R DRIVE					
	4801	68510-E0100	ASSY-LID GLOVE BOX	1	1	WAGON & VAN R DRIVE					
	4901	68515-E0100	STOPPER-LID GLOVE BOX	5	5	WAGON & VAN R DRIVE					
	5001	00314-00642	SCREW-MACHINE	2	50	WAGON & VAN R DRIVE					
	5101	00915-11042	WASHER-LOCK SPRING	2	50	WAGON & VAN R DRIVE					
	5201	68530-E0100	BOX-GLOVE	1	1	WAGON & VAN R DRIVE					
	02	68530-E0101	BOX-GLOVE	1	1	WAGON & VAN R DRIVE					
	5301	00514-01310	SCREW-TAPPING	6	50	WAGON & VAN R DRIVE					
	5401	00514-01310	SCREW-TAPPING	1	50	WAGON & VAN R DRIVE					
	5501	08964-10510	NUT-SPRING	2	50	WAGON & VAN R DRIVE					
	5601	68560-E0100	BUMPER-LID	2	10	WAGON & VAN R DRIVE					

NOTE:

© 1972 NISSAN MOTOR CO., LTD.

REVISED: DECEMBER, 1972
PRINTED IN JAPAN

DASH & INSTRUMENT TRIMMING (W & V R DRIVE)

S	KEY NO.	PART NO.	DESCRIPTION	QTY	UNIT PKG FOR DIST.	APPLIED MODEL	APPLIED DATE FROM	APPLIED DATE UP TO	ICA N	ICA F	SUPERSEDED
	5701	68570-E0100	GROMMET-LID STOPPER	1	10	WAGON & VAN R DRIVE					
	5801	68630-E0100	LOCK-GLOVE BOX LID	1	1	WAGON & VAN R DRIVE					
	5901	68640-E0100	STRIKER-GLOVE BOX LID LOCK	1	10	WAGON & VAN R DRIVE					
•	6001	00511-01010	SCREW-TAPPING	2	50	WAGON & VAN R DRIVE					
	02	00511-01012	SCREW-TAPPING	2	10	WAGON & VAN R DRIVE			Y	N	00511-01010
	6101	68635-E0100	COVER GLOVE BOX LOCK	1	5	WAGON & VAN R DRIVE					
	6201	08320-30642	SCREW-MACHINE	2	50	WAGON & VAN R DRIVE					

NOTE:

© 1972 NISSAN MOTOR CO., LTD.

PRINTED IN JAPAN

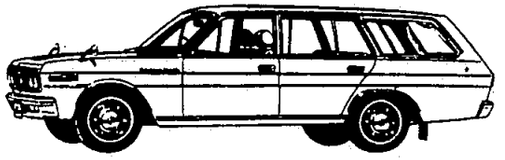

NOTE

NISSAN MOTOR CO., LTD.

Printed in Japan

NOTE

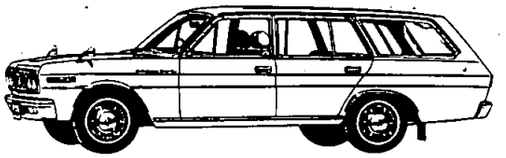

Printed in Japan

NISSAN MOTOR CO., LTD.

DASH & INSTRUMENT TRIMMING (W & V L DRIVE)

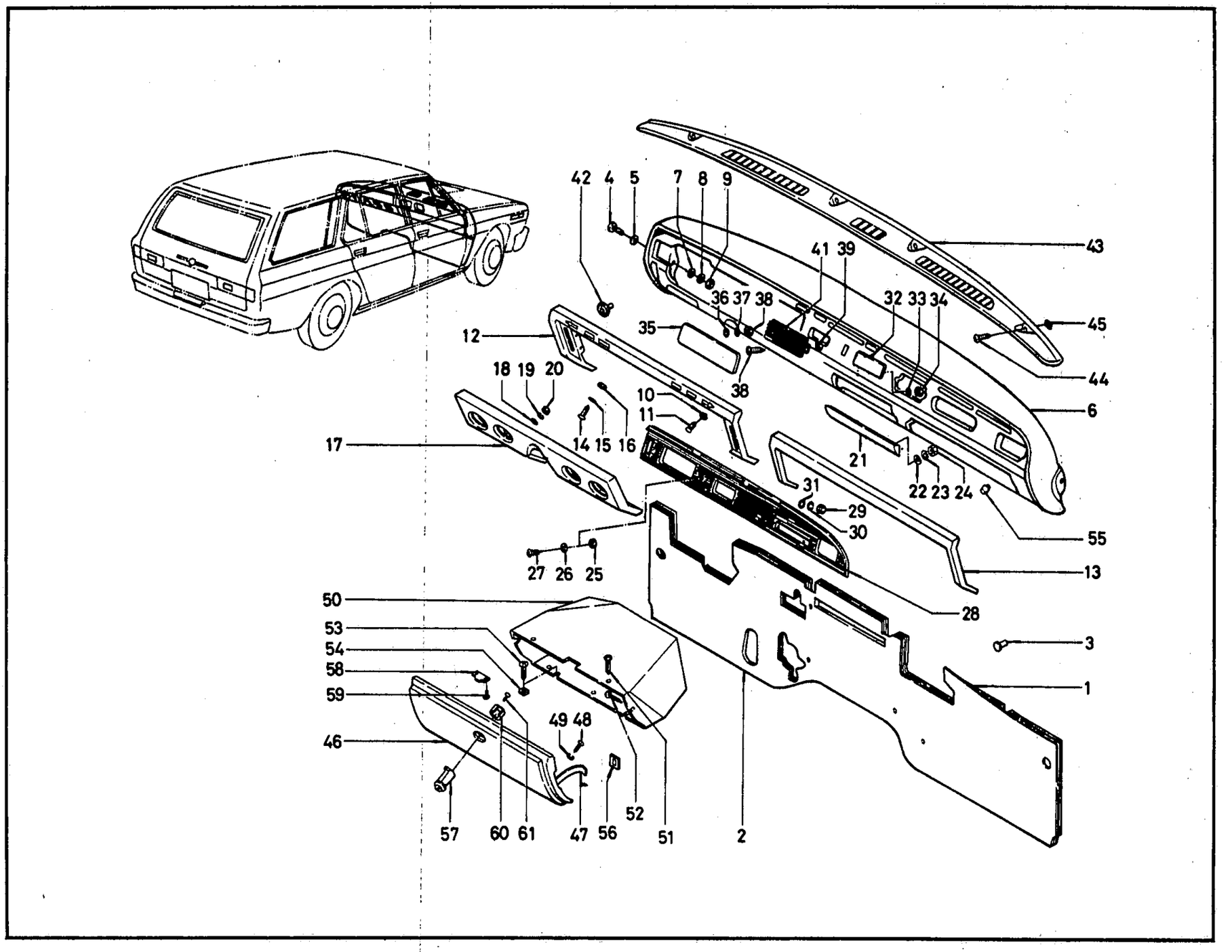

ILLUSTRATION **247A**

© 1972 NISSAN MOTOR CO., LTD.

REVISED: DECEMBER, 1972

PRINTED IN JAPAN

DASH & INSTRUMENT TRIMMING (W & V L DRIVE)

S	KEY NO.	PART NO.	DESCRIPTION	Q'TY	UNIT PKG FOR DIST.	APPLIED MODEL	APPLIED DATE FROM	APPLIED DATE UP TO	ICA N	ICA F	SUPERSEDED
	101	67900-E1200	ASSY-INSULATOR DASH RH	1	1	W & V L DRIVE					
	201	67901-E1200	ASSY-INSULATOR DASH LH	1	1	W & V L DRIVE					
	301	67930-73000	FASTENER-TRIM	5	10	W & V L DRIVE					
	401	00114-52010	BOLT	2	50	W & V L DRIVE					
	501	00915-51510	WASHER-PLAIN	2	50	W & V L DRIVE					
	601	68210-E0100	ASSY-PAD INST UPPER	1	1	W & V L DRIVE					
	701	00915-41210	WASHER-PLAIN	6	50	W & V L DRIVE					
	801	00915-11010	WASHER-LOCK	6	50	W & V L DRIVE					
	901	00911-14010	NUT	6	50	W & V L DRIVE					
	1001	00918-31010	NUT-SPPING TYPE A	2	50	W & V L DRIVE					
	1101	00531-01642	SCREW-TAPPING	2	50	W & V L DRIVE					
	1201	68240-E1201	ASSY-PAD INST,CENTER NO.1	1	2	W & V L DRIVE					
	1301	68250-E1201	ASSY-PAD INST CENTER NO 2	1	1	W & V L DRIVE					
	1401	00511-01610	SCREW-TAPPING	2	50	W & V L DRIVE					
	1501	00915-41010	WASHER-PLAIN	2	50	W & V L DRIVE					
	1601	68295-89900	NUT	2	1	W & V L DRIVE					
	1701	68270-E1200	ASSY-PAD INST LOWER LH	1	1	W & V L DRIVE					
	1801	00915-41210	WASHER-PLAIN	6	50	W & V L DRIVE					
	1901	00915-11010	WASHER-LOCK	6	50	W & V L DRIVE					
	2001	00911-14010	NUT	6	50	W & V L DRIVE					
	2101	68280-E1200	ASSY-PAD INST LOWER RH	1	1	W & V L DRIVE					
	2201	00915-40810	WASHER-PLAIN	3	50	W & V L DRIVE					
	2301	00915-10810	WASHER-LOCK SPRING	3	50	W & V L DRIVE					

NOTE:

REVISED: DECEMBER, 1972

© 1972 NISSAN MOTOR CO., LTD.

PRINTED IN JAPAN

DASH & INSTRUMENT TRIMMING (W & V L DRIVE)

S	KEY NO.	PART NO.	DESCRIPTION	Q'TY	UNIT PKG FOR DIST.	APPLIED MODEL	APPLIED DATE FROM	APPLIED DATE UP TO	ICA N	ICA F	SUPERSEDED
	2401	00911-10810	NUT	3	50	W & V L DRIVE					
	2501	68880-89902	NUT	2	10	W & V L DRIVE					
	2601	00915-41010	WASHER-PLAIN	2	50	W & V L DRIVE					
	2701	00511-01642	SCREW-TAPPING NO.10	2	50	W & V L DRIVE					
	2801	68410-E1301	ASSY-FINISHER	1	2	VAN L DRIVE					
	02	68410-E1302	ASSY-FINISHER	1	2	VAN L DRIVE					
	2901	00911-14010	NUT	5	50	W & V L DRIVE					
	3001	00915-11010	WASHER-LOCK SPRING	5	50	W & V L DRIVE					
	3101	00915-41010	WASHER-PLAIN	5	50	W & V L DRIVE					
	3201	68460-E0302	MASK-CLOCK HOLE	1	5	W & V L DRIVE					
	3301	00915-11010	WASHER-LOCK SPRING	2	50	W & V L DRIVE					
	3401	00911-14010	NUT	2	50	W & V L DRIVE					
	3501	68470-E0301	ASSY-MASK RADIO APERTURE	1	2	W & V L DRIVE					
	3601	00915-51410	WASHER-PLAIN	2	50	W & V L DRIVE					
	3701	00915-11010	WASHER-SPRING	2	50	W & V L DRIVE					
	3801	00911-14010	NUT	2	50	W & V L DRIVE					
	3901	00921-01642	SCREW-TAPPING	2	50	W & V L DRIVE					
	4001	68880-89902	NUT	2	10	W & V L DRIVE					
	4101	68490-E0100	MASK-SWITCH HOLE	1	2	W & V L DRIVE					
	4201	68877-73000	PUSH-ON FIX 3/8	1	10	W & V L DRIVE					
	4301	68310-E0100	GARNISH-INSTRUMENT	1	1	W & V L DRIVE					
	4401	00510-61642	SCREW-TAPPING	4	50	W & V L DRIVE					
	4501	08964-10710	NUT-SPPING	4	50	W & V L DRIVE					

NOTE:

ILLUSTRATION 247A

© 1972 NISSAN MOTOR CO., LTD.

REVISED: DECEMBER, 1972

PRINTED IN JAPAN

DASH & INSTRUMENT TRIMMING (W & V L DRIVE)

S	KEY NO.	PART NO.	DESCRIPTION	QTY	UNIT PKG FOR DIST.	APPLIED MODEL	APPLIED DATE FROM	APPLIED DATE UP TO	ICA N	ICA F	SUPERSEDED
	4601	68510-E1200	ASSY-LID GLOVE BOX	1	1	W & V L DRIVE					
	4701	68515-E1200	STOPPER-LID GLOVE BOX	1	5	W & V L DRIVE					
	4801	00314-00642	SCREW-MACHINE	2	50	W & V L DRIVE					
	4901	00915-11042	WASHER-LOCK SPRING	2	50	W & V L DRIVE					
	5001	68530-E1200	BOX-GLOVE	1	1	W & V L DRIVE					
	02	68530-E1201	BOX-GLOVE	1		W & V L DRIVE					
	5101	00514-01310	SCREW-TAPPING	6	50	W & V L DRIVE			Y	Y	00514-01342
	5201	00514-01310	SCREW-TAPPING	1	50	W & V L DRIVE			Y	Y	00514-01342
	5301	00514-01310	SCREW-TAPPING	2	50	W & V L DRIVE			Y	Y	00514-01342
	5401	03964-10510	NUT-SPRING	2	50	W & V L DRIVE					
	5501	68560-E0100	BUMPER-LID	2	10	W & V L DRIVE					
	5601	68570-E0100	GROMMET-LID STOPPER	1	10	W & V L DRIVE					
	5701	68630-E0100	LOCK GLOVE BOX LID	1	1	W & V L DRIVE					
	5801	68640-E0100	STRIKER-GLOVE BOX LID LOCK	1	10	W & V L DRIVE					
	5901	00511-01010	SCREW-TAPPING	2	50	W & V L DRIVE					
	02	00511-01012	SCREW-TAPPING	2	50	W & V L DRIVE			Y	N	00511-01010
	6001	68635-E0100	COVER-GLOVE BOX LOCK	1	5	W & V L DRIVE					
	6101	08320-30642	SCREW-MACHINE	2	50	W & V L DRIVE					

NOTE:

REVISED: DECEMBER, 1972

© 1972 NISSAN MOTOR CO., LTD.

PRINTED IN JAPAN

NOTE

NISSAN MOTOR CO., LTD.

Printed in Japan

NOTE

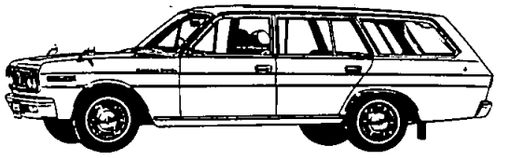

Printed in Japan

NISSAN MOTOR CO., LTD.

WINDSHIELD GLASS, WEATHERSTRIP & MOULDING (W & V)

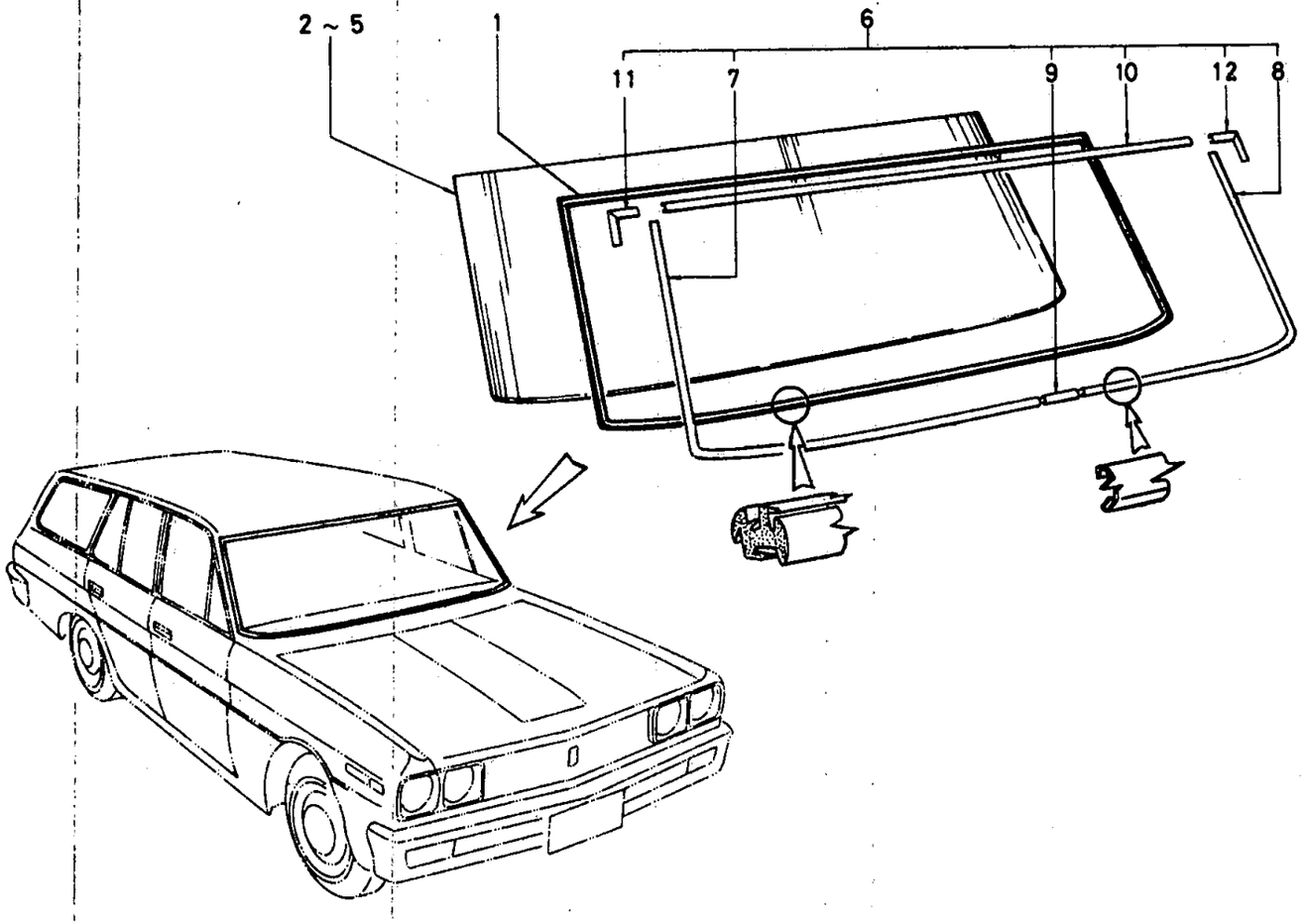

ILLUSTRATION **248**

© 1972 NISSAN MOTOR CO., LTD.

REVISED: DECEMBER, 1972

PRINTED IN JAPAN

WINDSHIELD GLASS, WEATHERSTRIP & MOULDING (W & V)

S	KEY NO.	PART NO.	DESCRIPTION	Q'TY	UNIT PKG FOR DIST.	APPLIED MODEL	APPLIED DATE FROM	APPLIED DATE UP TO	ICA N	ICA F	SUPERSEDED
	101	72610-E0100	WEATHERSTRIP-WINDSHIELD	1	1	WAGON & VAN					
*	201	72613-E0100	GLASS-WINDSHIELD TINTED & TEMPERD 5.0T	1	1	WAGON					
	02	72613-E0101	GLASS-WINDSHIELD TINTED & TEMPERD 5.0T	1	1	WAGON			Y	N	72613-E0100
*	301	72613-E0700	GLASS-WIND SHIELD TEMPERED 5.0T	1	1	WAGON					
	02	72613-E0701	GLASS-WIND SHIELD TEMPERED 5.0T	1	1	WAGON			Y	N	72613-E0700
	401	72613-E1100	GLASS-WIND SHIELD TINTED & LAMINATED 5.0T	1	1	WAGON & VAN					
	501	72613-E1300	GLASS-WINDSHIELD LAMINATED 5.0T	1	1	WAGON & VAN					
	601	72810-E0100	SET-MOULDING WINDSHIELD	1	1	WAGON & VAN					
	701	72811-E0100	MOULDING-WINDSHIELD RH	1	1	WAGON & VAN					
	801	72812-E0100	MOULDING-WINDSHIELD LH	1	1	WAGON & VAN					
	901	72813-73000	CLIP-MOULDING WINDSHIELD	1	5	WAGON & VAN					
	1001	72814-E0100	MOULDING-WINDSHIELD UPPER	1	1	WAGON & VAN					
	1101	72816-E0100	MOULDING-WINDSHIELD CORNER RH	1	5	WAGON & VAN					
	1201	72817-E0100	MOULDING-WINDSHIELD CORNER LH	1	5	WAGON & VAN					

NOTE:

© 1972 NISSAN MOTOR CO., LTD.

PRINTED IN JAPAN

Next to new cars

Genuine Nissan Spare Parts are most profitable.

NISSAN

NOTE

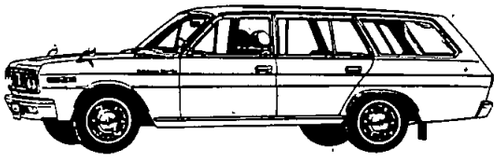

Printed in Japan

NISSAN MOTOR CO., LTD.

ROOF PANEL & TRIMMING (W & V)

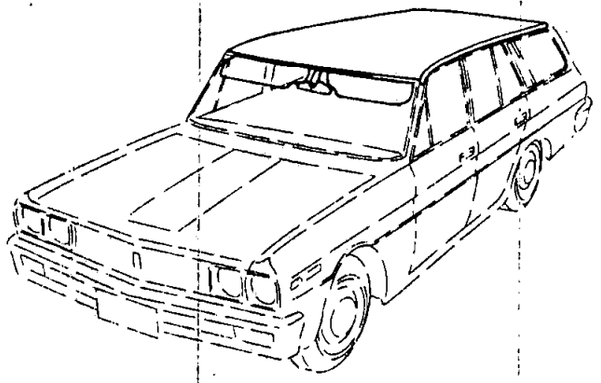

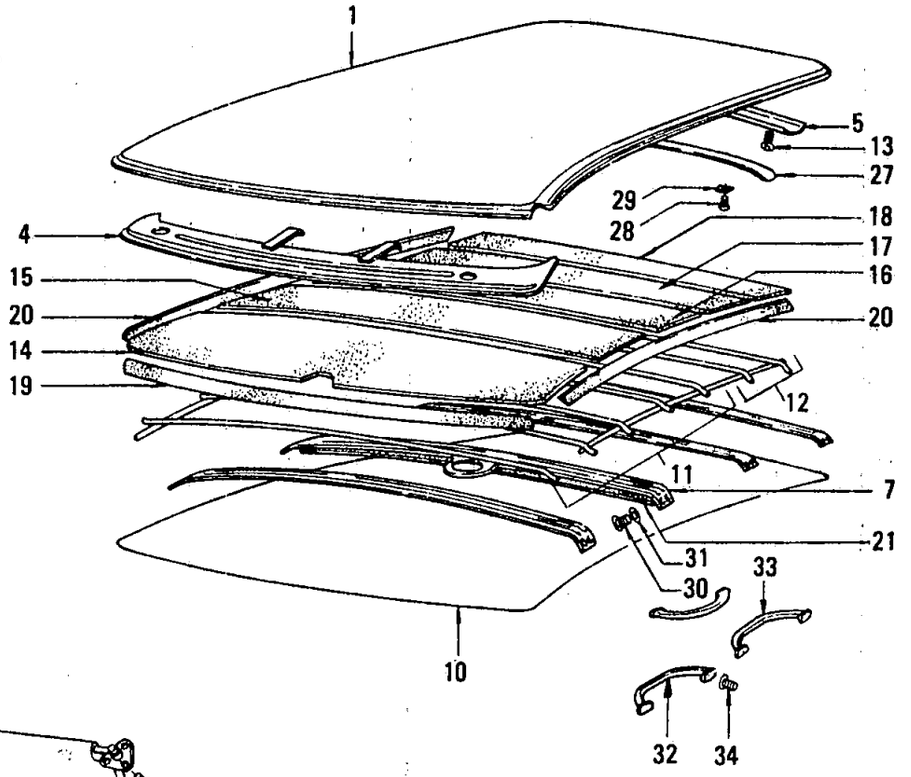

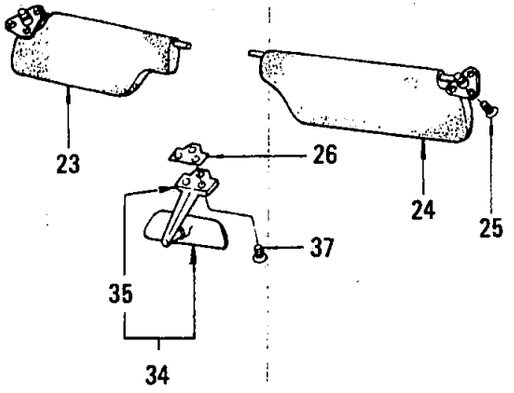

ILLUSTRATION **249**

© 1972 NISSAN MOTOR CO., LTD.

REVISED: DECEMBER, 1972

PRINTED IN JAPAN

ROOF PANEL & TRIMMING (W & V)

S	KEY NO.	PART NO.	DESCRIPTION	Q'TY	UNIT PKG FOR DIST.	APPLIED MODEL	APPLIED DATE FROM	APPLIED DATE UP TO	ICA N	ICA F	SUPERSEDED
	1D1	73111-E0430	PANEL-ROOF	1	1	WAGON & VAN					
*	2D1	73112-E0400	PANEL-REAR QUOTER RH	1	1	WAGON & VAN					
	D2	73112-E0430	PANEL-REAR QUOTER RH	1	1	WAGON & VAN			Y	Y	73112-E0400
*	3D1	73113-E0400	PANEL-REAR QUOTER LH	1	1	WAGON & VAN					
	D2	73113-E0430	PANEL-REAR QUOTER LH	1	1	WAGON & VAN			Y	Y	73113-E0400
	4D1	73210-E0100	ASSY-RAIL FRONT ROOF	1	1	WAGON & VAN					
*	5D1	73230-E0400	ASSY-RAIL REAR ROOF	1	1	WAGON & VAN					
	6D1	73222-E0100	ASSY-BRAKAT ROOM LAMP	1	1	WAGON & VAN					
	7D1	73224-E0400	ROW-ROOF #3	1	1	WAGON & VAN			N	N	73224-73200
	8D1	73240-E0450	ASSY-RAIL SIDE ROOF FRONT RH	1	1	WAGON & VAN					
	9D1	73241-E0450	ASSY-RAIL SIDE ROOF FRONT LH	1	1	WAGON & VAN					
	10D1	73910-E0400	ASSY-CLOTH-HEAD LINING	1	1	WAGON & VAN					
	11D1	73921-E0100	WIRE-LISTING HEAD LINING #1	5	5	WAGON & VAN					
	12D1	73923-E0400	WIRE-LISTING HEAD LINING #3	2	5	WAGON & VAN					
	13D1	00511-01310	SCREW-TAPPING 10X13	10	50	WAGON & VAN					
*	14D1	73930-E0100	INSULATOR-ROOF FRONT	1	1	WAGON & VAN			N	N	73930-E0100
	D2	73930-E0110	INSULATOR-ROOF FRONT	1	1	WAGON & VAN					
	15D1	73931-E0100	INSULATOR-ROOF CENTER	1	1	WAGON & VAN			N	N	73931-E0100
	D2	73931-E0110	INSULATOR-ROOF CENTER	1		WAGON & VAN					
	16D1	73932-E0400	INSULATOR-ROOF REAR A	1	1	WAGON & VAN			N	N	73932-E0400
	D2	73932-E0410	INSULATOR-ROOF REAR A	1		WAGON & VAN					
	17D1	73933-E0400	INSULATOR-ROOF REAR B	1	1	WAGON & VAN			N	N	73933-E0400
	D2	73933-E0410	INSULATOR-ROOF REAR B	1		WAGON & VAN					

NOTE:

© 1972 NISSAN MOTOR CO., LTD.

PRINTED IN JAPAN

ROOF PANEL & TRIMMING (W & V)

S	KEY NO.	PART NO.	DESCRIPTION	QTY	UNIT PKG FOR DIST.	APPLIED MODEL	APPLIED DATE FROM	APPLIED DATE UP TO	ICA N	ICA F	SUPERSEDED
	18D1	73934-E0400	INSULATOR-ROOF REAR CENTER	1	1	WAGON & VAN			N	N	73934-E0400
	D2	73934-E0410	INSULATOR-ROOF REAR CENTER	1		WAGON & VAN					
	19D1	73936-E0100	PAD-ROOF FRONT	1	5	WAGON & VAN			N	N	73937-E0400
	20D1	73937-E0100	PAD-ROOF SIDE	2	5	WAGON & VAN					
	21D1	73938-73000	PAD-ROOM LAMP BRACKET	1	1	WAGON & VAN					
	22D1	73939-E0400	PAD-ROOF SIDE REAR	2	5	WAGON & VAN					
*	23D1	96400-E0101	ASSY-SUNVISOR RH	1	1	VAN LD					
	D2	96400-E0102	ASSY-SUNVISOR RH	1	1	WAGON & VAN					
*	24D1	96401-E0101	ASSY-SUNVISOR LH	1	1	VAN LD					
	D2	96401-E0102	ASSY-SUNVISOR LH	1	1	WAGON & VAN					
	25D1	00434-01620	SCREW #10-32X16	6	50	WAGON & VAN					
	26D1	96409-E0100	SPACER-BACK MIRROR INSIDE	1	1	WAGON & VAN					
	27D1	73918-E0400	COVER-TOSION BAR #1115	1	1	WAGON & VAN					
	28D1	00530-61320	SCREW-TAPPING	8	50	WAGON & VAN					
	29D1	08963-10710	SPRING NUT TYPE A 35	8	50	WAGON & VAN					
*	30D1	00510-81310	SCREW-TAPPING	4	50	WAGON & VAN					
	D2	00510-81312	SCREW-TAPPING	4	50	WAGON & VAN			Y	N	00510-81310
	31D1	00915-40810	WASHER-PLAIN	4	50	WAGON & VAN					
	32D1	73940-E0101	ASSY-ASSIST STRAP FRONT ASSIST SEAT SIDE	1	1	WAGON & VAN			Y	Y	73940-E0100
	33D1	73941-E0100	ASSY-ASSIST STRAP REAR WITH COAT HANGER	2	1	WAGON & VAN					
	34D1	00414-41610	SCREW-MACHINE	6	50	WAGON & VAN					
	35D1	96301-10800	ASSY-BACK MIRROR INSIDE	1	1	WAGON					

NOTE:

© 1972 NISSAN MOTOR CO., LTD.

REVISED: DECEMBER, 1972
PRINTED IN JAPAN

ROOF PANEL & TRIMMING (W & V)

S	KEY NO.	PART NO.	DESCRIPTION	Q'TY	UNIT PKG FOR DIST.	APPLIED MODEL	APPLIED DATE FROM	APPLIED DATE UP TO	ICA N	ICA F	SUPERSEDED
*	3502	96321-E0200	ASSY-BACK MIRROR INSIDE	1	2	WAGON					
	03	96321-E3000	ASSY-BACK MIRROR INSIDE	1	2	WAGON			Y	N	96321-E0200
	04	96321-E0300	ASSY-BACK MIRROR INSIDE	1	1	VAN LD					
*	05	96322-E0101	ASSY-BACK MIRROR INSIDE	1		WAGON					
*	06	96322-E3200	ASSY-BACK MIRROR INSIDE	1	1	WAGON			Y	Y	96322-E0101
	07	96322-E3202	ASSY-BACK MIRROR INSIDE	1	1	WAGON			Y	N	96322-E3200
	08	96322-E0300	ASSY-BACK MIRROR INSIDE	1	1	VAN LD					
	3601	96325-E0200	STAY-BACK MIRROR	1	1	WAGON & VAN					
	02	96321-E0300	ASSY-BACK MIRROR INSIDE	1	1	VAN LD					
	3701	00434-01620	SCREW-MACHINE	1	50	WAGON					
	3801	96325-E0200	STAY-BACK MIRROR	1	1	WAGON & VAN					
	3901	00434-01620	SCREW-MACHINE	3	50	WAGON & VAN					

NOTE:

© 1972 NISSAN MOTOR CO., LTD.

PRINTED IN JAPAN

NOTE

NOTE

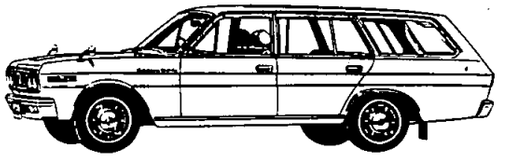

Printed in Japan

NISSAN MOTOR CO., LTD.

FLOOR PANEL & FITTING (W & V)

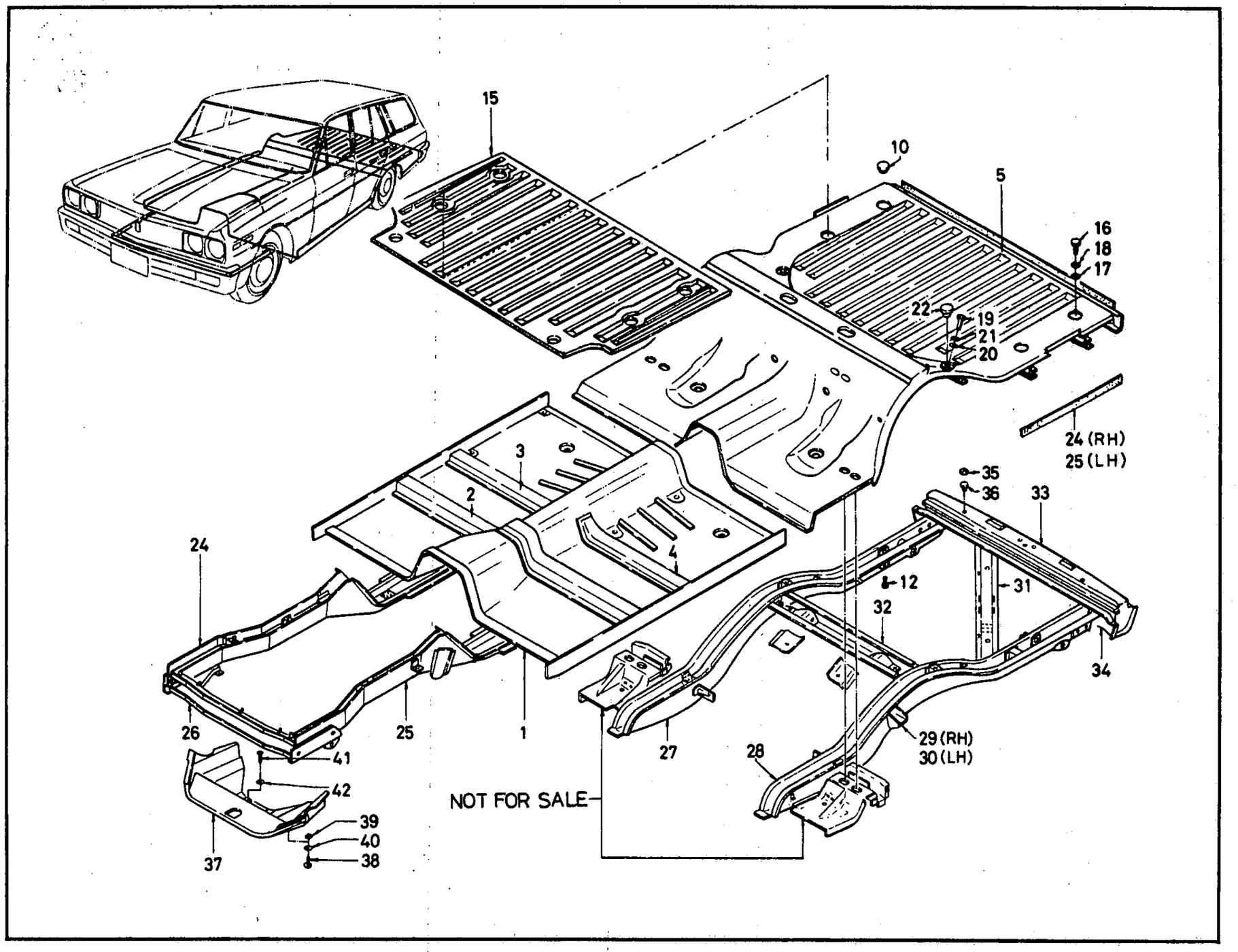

ILLUSTRATION **250**

© 1972 NISSAN MOTOR CO., LTD.

REVISED: DECEMBER, 1972

PRINTED IN JAPAN

FLOOR PANEL & FITTING (W & V)

S	KEY NO.	PART NO.	DESCRIPTION	Q'TY	UNIT PKG FOR DIST.	APPLIED MODEL	APPLIED DATE FROM	APPLIED DATE UP TO	ICA N	ICA F	SUPERSEDED
	101	74311-73030	PANEL-FRONT FLOOR	1	1	WAGON & VAN					
	201	74330-73050	ASSY-2ND CROSS MEMBER	1	1	WAGON & VAN					
	301	74340-73000	ASSY-MEMBER FRONT SEAT MOUNTING RH	1	1	WAGON & VAN					
	401	74341-73000	ASSY-MEMBER FRONT SEAT MOUNTING LH	1	1	WAGON & VAN					
•	501	74500-E0530	ASSY-FLOOR REAR	1	1	WAGON & VAN					
	601	74993-73000	PLUG-TRUNK FLOOR SIDE	1	10	WAGON & VAN					
	701	74554-73200	ASSY-CAP SHOCK ABSORBER HOLE	2	5	WAGON & VAN					
	801	74557-73200	ASSY-CAP INSPECTION HOLE	1	5	WAGON & VAN					
	901	74942-04100	PLUG-RUBBER	1	50	WAGON & VAN					
	1001	74942-09500	PLUG-RUBBER	4	10	WAGON & VAN					
	1101	74586-E0400	RUBBER-FLANGE COVER	2	5	WAGON & VAN					
•	1201	00314-51210	SCREW-MACHINE	2		WAGON & VAN					
	02	00314-51412	SCREW-MACHINE	2	50	WAGON & VAN			Y	N	00314-51210
	1301	74517-73200	ASSY-PLATE MUD GUARD SPER TIRE	1	1	WAGON & VAN					
	1401	74520-89900	RIVET	2	10	WAGON & VAN					
•	1501	74513-E0451	ASSY-ADDITION	1	1	VAN VAN-DX					
	1601	00114-52210	BOLT-FIX ADDITION FLOOR	4	50	VAN VAN-DX					
	1701	00915-41510	WASHER-PLAIN FIX ADDITION FLOOR	4	50	VAN VAN-DX					
	1801	00915-11510	WASHER-SPRING FIX ADDITION FLOOR	4	50	VAN VAN-DX					
	1901	00114-72210	BOLT-FIX ADDITION FLOOR	2	50	VAN VAN-DX					

NOTE:

© 1972 NISSAN MOTOR CO., LTD.

PRINTED IN JAPAN

FLOOR PANEL & FITTING (W & V)

S	KEY NO.	PART NO.	DESCRIPTION	QTY	UNIT PKG FOR DIST.	APPLIED MODEL	APPLIED DATE FROM	APPLIED DATE UP TO	ICA N	ICA F	SUPERSEDED
	2001	00915-41710	WASHER-PLAIN FIX ADDITION FLOOR	2	50	VAN VAN-DX					
	2101	00915-11710	WASHER-SPRING FIX ADDITION FLOOR	2	50	VAN VAN-DX					
	2201	77700-89903	PLUG-HOLE	2	10	VAN VAN-DX					
	2301	74557-73200	ASSY-CAP INSPECTION HOLE	4	5	VAN VAN-DX					
	2401	74801-E0130	ASSY-MEMBER SIDE FRONT RH	1	1	WAGON & VAN			Y	Y	74801-E0131
	2501	74802-E1130	ASSY-MEMBER SIDE FRONT LH	1	1	WAGON & VAN					
	2601	74840-E0100	ASSY-CROSS MEMBER FRONT	1	1	WAGON & VAN					
	2701	74851-E0430	ASSY-MEMBER SIDE REAR RH	1	1	WAGON & VAN					
	2801	74852-73230	ASSY-MEMBER SIDE REAR LH	1	1	WAGON & VAN					
	2901	74883-73000	ASSY-BRACKET REAR SPRING BUMPER	1	1	WAGON & VAN					
	3001	74884-73000	ASSY-BRACKET REAR SPRING BUMPER LH	1	1	WAGON & VAN					
	3101	74880-73200	ASSY-MEMBER REAR FLOOR	1	1	WAGON & VAN					
	3201	74530-73200	ASSY-MEMBER REAR SHOCK ABSORBER	1	1	WAGON & VAN					
	3301	74851-E0430	ASSY-MEMBER REAR CROSS OUTER	1	1	WAGON & VAN					
	3401	74595-E0400	ASSY-MEMBER CROSS INNER	1	1	WAGON & VAN					
	3501	74942-04100	PLUG-RUBBER	3	50	WAGON & VAN					
	3601	64821-32200	PLUG-LOCATE HOLE	3	50	WAGON & VAN					
	3701	74891-E0100	BOARD-SPLASH SHIELD	1	1	WAGON & VAN					
	3801	00511-01310	SCREW-TAPPING	4	50	WAGON & VAN					
	3901	08963-20510	NUT-SPRING TYPE A	4	50	WAGON & VAN					

NOTE:

© 1972 NISSAN MOTOR CO., LTD.

REVISED: DECEMBER, 1972
PRINTED IN JAPAN

FLOOR PANEL & FITTING (W & V)

S	KEY NO.	PART NO.	DESCRIPTION	Q'TY	UNIT PKG FOR DIST.	APPLIED MODEL	APPLIED DATE FROM	APPLIED DATE UP TO	ICA N	ICA F	SUPERSEDED
	4001	00915-41010	WASHER-PLAIN #10	4	50	WAGON & VAN					
*	4101	00510-81310	SCREW-TAPPING	1	50	WAGON AUTOMATIC					
	02	00510-81312	SCREW-TAPPING	1	50	WAGON AUTOMATIC			Y	N	00510-81310
	4201	00915-40810	WASHER-PLAIN	1	50	WAGON AUTOMATIC					

NOTE:

© 1972 NISSAN MOTOR CO., LTD.

PRINTED IN JAPAN

NOTE

NISSAN MOTOR CO., LTD.

Printed in Japan

NOTE

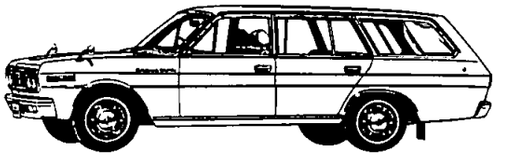

Printed in Japan

NISSAN MOTOR CO., LTD.

FLOOR CARPET (W & V R DRIVE)

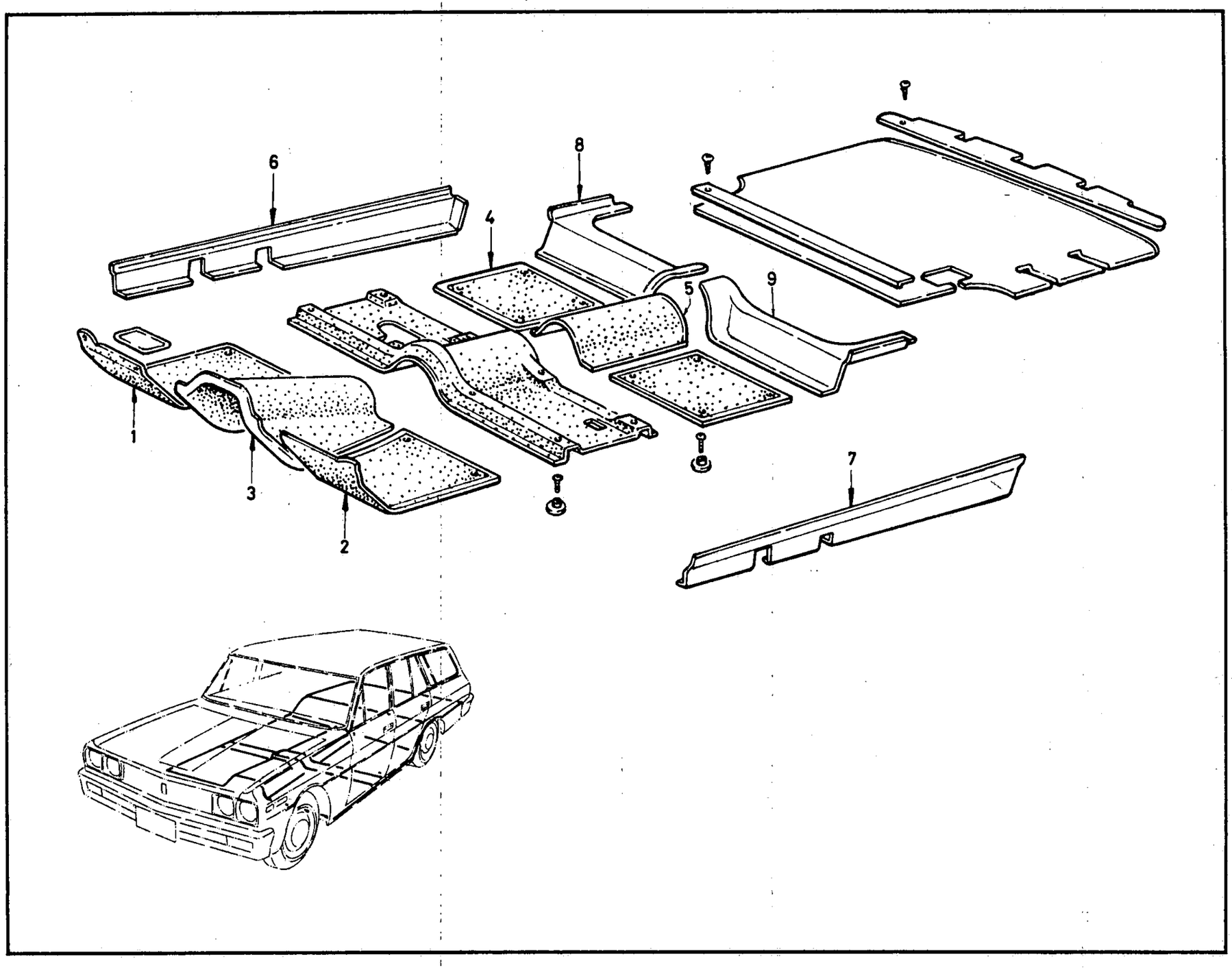

ILLUSTRATION **251-1**

© 1972 NISSAN MOTOR CO., LTD.

REVISED: DECEMBER, 1972

PRINTED IN JAPAN

FLOOR CARPET (W & V L DRIVE)

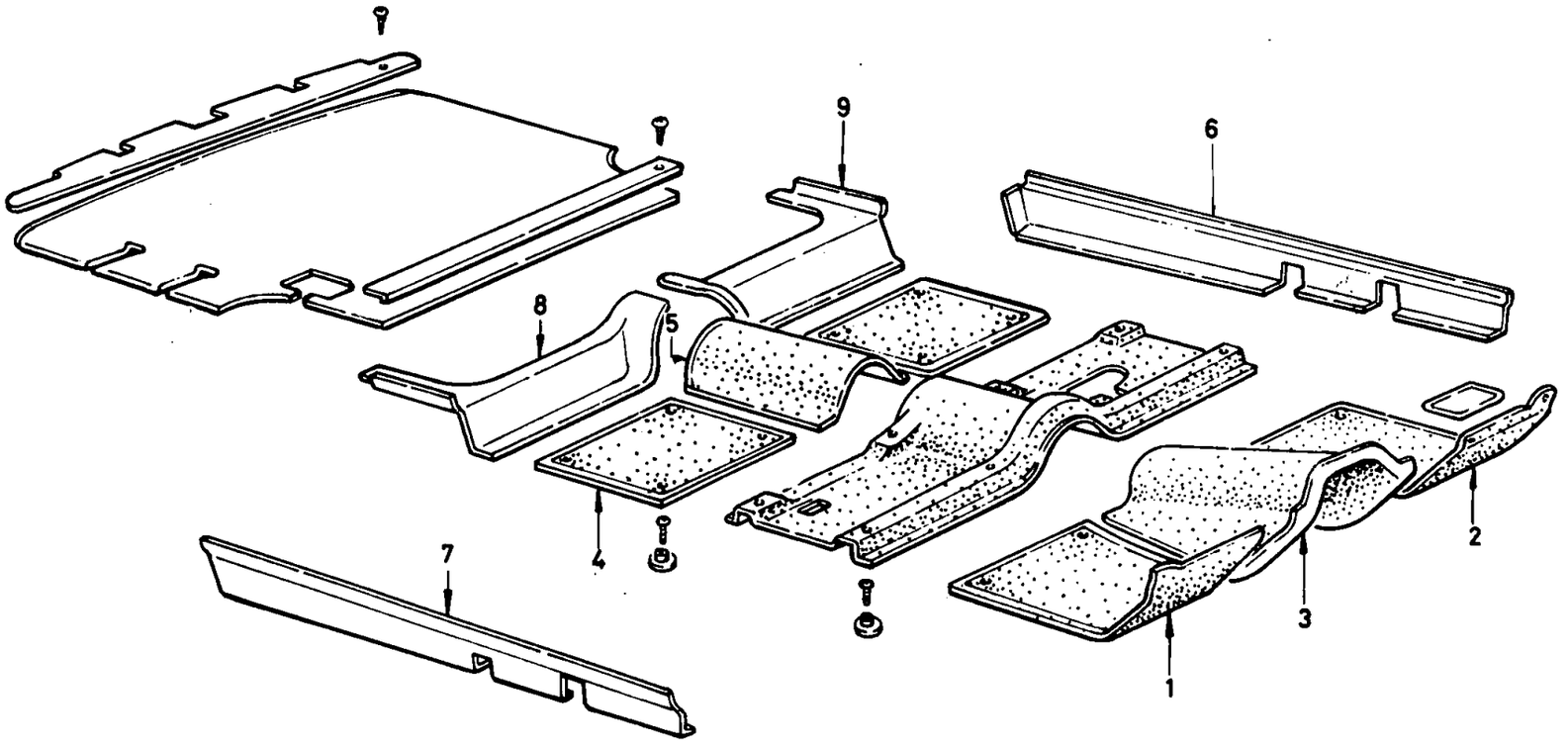

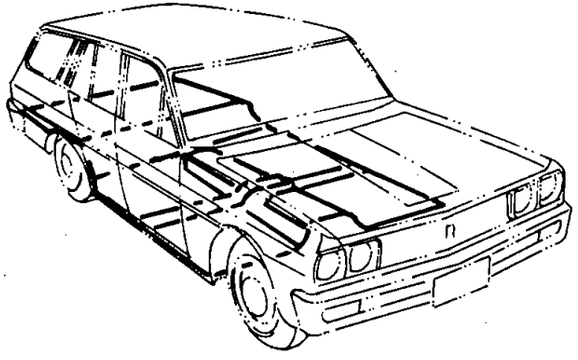

PRINTED IN JAPAN

© 1972 NISSAN MOTOR CO., LTD.

FLOOR CARPET (W & V)

S	KEY NO.	PART NO.	DESCRIPTION	QTY	UNIT PKG FOR DIST.	APPLIED MODEL	APPLIED DATE FROM	APPLIED DATE UP TO	ICA N	ICA F	SUPERSEDED
	101	74902-E0201	CARPET-FLOOR FRONT BROWN #1450 RH	1	1	WAGON R DRIVE					
	02	74902-E0500	CARPET-FLOOR FRONT BLUE #1433 RH	1	1	WAGON R DRIVE					
	03	74902-E1205	CARPET-FLOOR FRONT BROWN #1450 RH	1	1	WAGON L DRIVE					
	201	74903-E0201	CARPET-FLOOR FRONT BROWN #1450	1	1	WAGON R DRIVE					
	02	74903-E0500	CARPET-FLOOR FRONT BLUE #1433 LH	1	1	WAGON R DRIVE					
	03	74903-E1205	CARPET-FLOOR FRONT BROWN #1450 LH	1	1	WAGON L DRIVE					
	301	74904-E0201	CARPET-FLOOR CENTER BROWN #1450	1	1	WAGON					
	02	74904-E0500	CARPET-FLOOR CENTER BLUE #1433	1	1	WAGON R DRIVE			C	N	74904-E0201
	03	74905-E0500	CARPET-FLOOR CENTER BROWN #1450	1	1	WAGON					
	04	74905-E0501	CARPET-FLOOR CENTER BLUE #1433	1	1	WAGON R DRIVE					
	05	74905-E3500	CARPET-FLOOR CENTER BLACK #896	1		WAGON					
	401	74906-E0201	CARPET-FLOOR REAR BROWN #1435 RH	1	1	WAGON			Y	Y	00520-62610
	501	74908-E0500	CARPET-FLOOR REAR CENTER BLUE #1433	1	1	WAGON			Y	Y	74908-E0500
	601	74910-E0111	CARPET-FLOOR SIDE SILL BROWN #1450 RH	1	1	WAGON R DRIVE					
	02	74910-E0114	CARPET-FLOOR SIDE SILL BLUE #1433	1	1	WAGON					

NOTE:

© 1972 NISSAN MOTOR CO., LTD.

REVISED: DECEMBER, 1972

PRINTED IN JAPAN

FLOOR CARPET (W & V)

S	KEY NO.	PART NO.	DESCRIPTION	QTY	UNIT PKG FOR DIST.	APPLIED MODEL	APPLIED DATE FROM	APPLIED DATE UP TO	ICA N	ICA F	SUPERSEDED
	603	74910-E0101	CARPET-FLOOR SIDE BROWN #1433	1	1	WAGON L DRIVE					
	04	74911-E0111	CARPET-FLOOR SIDE SILL BROWN #1450	1	1	WAGON R DRIVE					
	701	74911-E0101	CARPET-FLOOR SIDE SILL BROWN #1450 LH	1	1	WAGON L DRIVE					
	801	74912-E0111	CARPET-REAR SEAT LOWER BROWN #1450 RH	1	1	WAGON R DRIVE					
	02	74912-E0114	CARPET-REAR SEAT LOWER BLUE #1433 RH	1	1	WAGON R DRIVE					
	03	74912-E0101	CARPET-REAR SEAT LOWER BROWN #1450 RH	1	1	WAGON L DRIVE					
	901	74913-E0111	CARPET-REAR SEAT LOWER BROWN #1450 LH	1	1	WAGON R DRIVE					
	02	74913-E0114	CARPET-REAR SEAT LOWER BLUE #1433 LH	1	1	WAGON R DRIVE					
	03	74913-E0101	CARPET-REAR SEAT LOWER BROWN #1450 LH	1	1	WAGON L DRIVE					

NOTE:

PRINTED IN JAPAN

© 1972 NISSAN MOTOR CO., LTD.

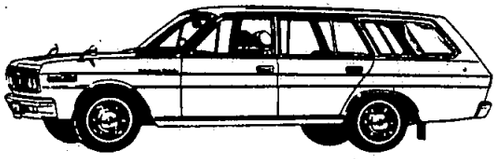

NOTE

NISSAN MOTOR CO., LTD.

Printed in Japan

NOTE

Printed in Japan

NISSAN MOTOR CO., LTD.

FLOOR MAT (W & V R DRIVE)

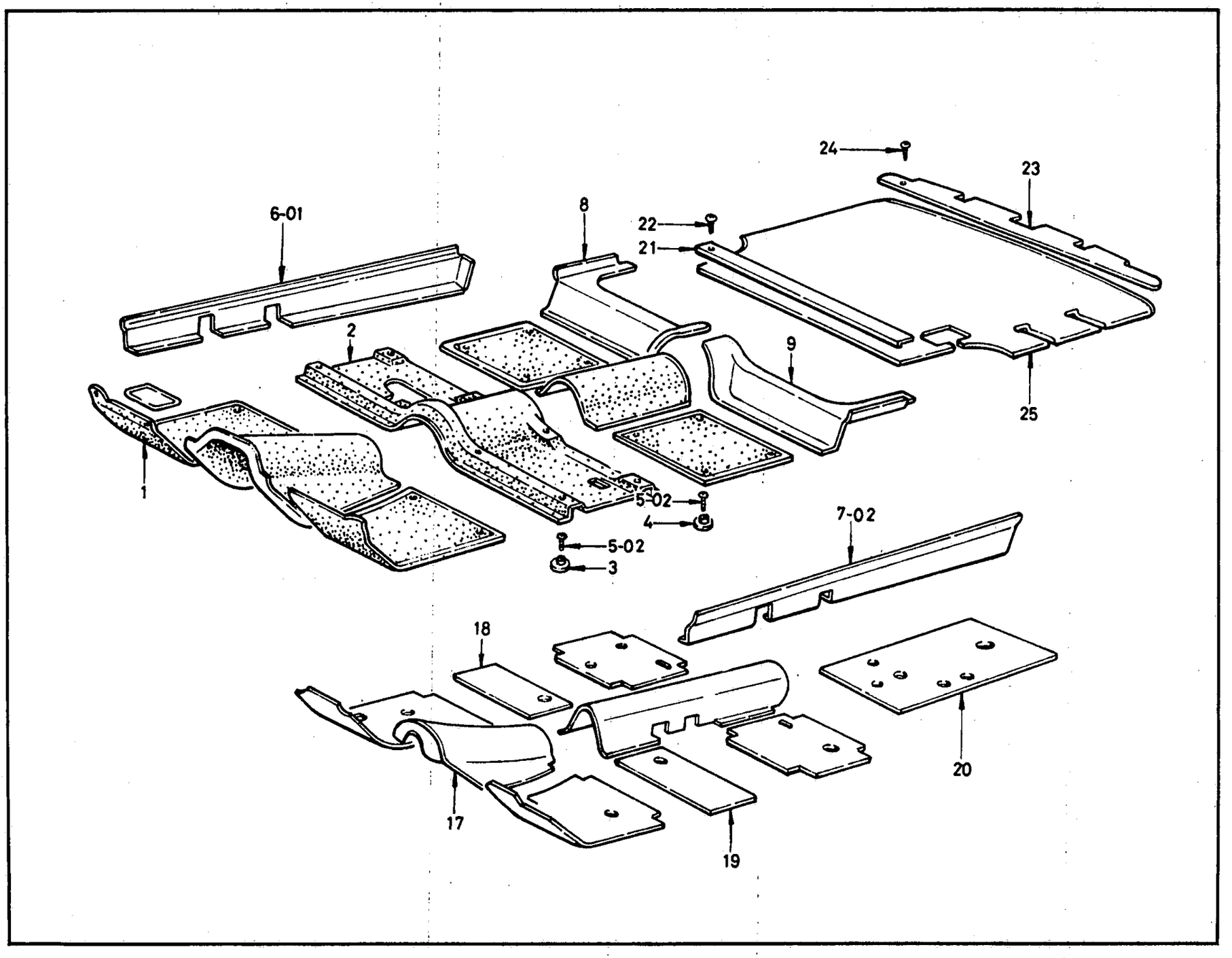

© 1972 NISSAN MOTOR CO., LTD.

REVISED: DECEMBER, 1972

PRINTED IN JAPAN

C

FLOOR MAT (W & V L DRIVE)

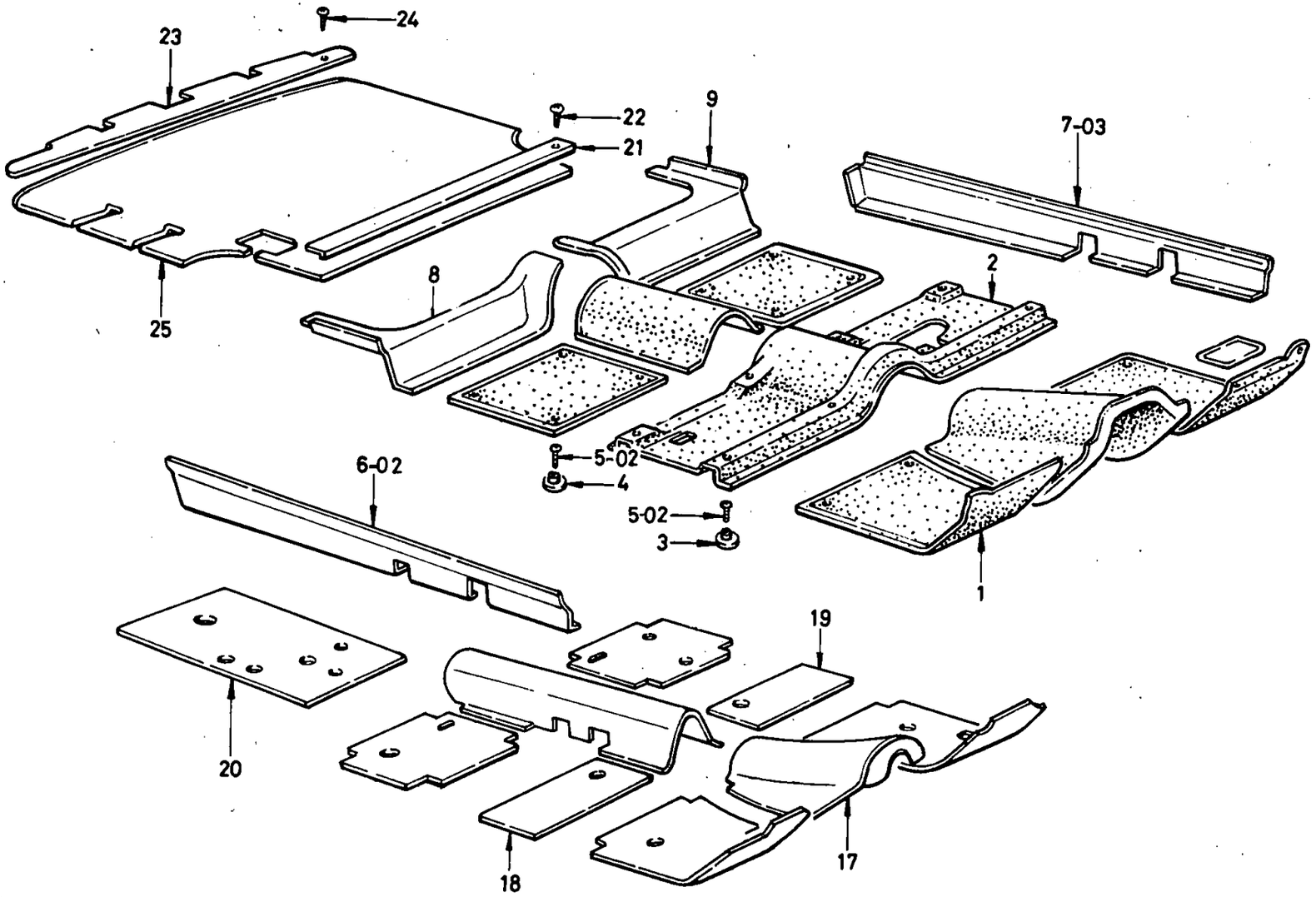

© 1972 NISSAN MOTOR CO., LTD.

PRINTED IN JAPAN

FLOOR MAT (W & V)

S	KEY NO.	PART NO.	DESCRIPTION	Q'TY	UNIT PKG FOR DIST.	APPLIED MODEL	APPLIED DATE FROM	APPLIED DATE UP TO	ICA N	ICA F	SUPERSEDED
	101	74902-E0303	MAT-FLOOR FRONT BLACK #543	1	1	WAGON & VAN RD					
	02	74902-E1303	MAT-FLOOR FRONT BLACK #543	1	1	WAGON AUTOMATIC L DRIVE					
	201	74905-E0401	MAT-FLOOR CENTER BLACK #543	1	1	WAGON AUTOMATIC L DRIVE					
	301	74933-30000	FASHNER-DURABLE DOT	2	10	WAGON & VAN					
	401	74915-32200	FASHENER-DURABLE DOT	4	10	WAGON & VAN			Y	Y	00520-61610
	501	74915-32200	FASHENER-DURABLE DOT	8	10	WAGON & VAN					
	02	00520-62610	SCREW-TAPPING	8	10	WAGON & VAN					
	601	74910-E0310	MAT-FLOOR SIDE SILL BLACK #543	1	1	VAN R DRIVE					
	02	74910-E0310	MAT-FLOOR SIDE SILL BLACK #543	1	1	VAN(LD)					
	701	74938-73200	INSULATOR-REAR SEAT	1	1	WAGON & VAN					
	02	74911-E0310	MAT-FLOOR SIDE SILL BLACK #543	1	1	VAN R DRIVE					
	03	74911-E0310	MAT-FLOOR SIDE SILL BLACK #543	1	1	VAN(LD)					
	801	74912-E0310	MAT-REAR SEAT LOWER BLACK #543 RH	1	1	VAN R DRIVE					
	02	74912-E0310	MAT-REAR SEAT LOWER BLACK #543 RH	1	1	VAN(LD)					
	901	74913-E0310	MAT-REAR SEAT LOWER BLACK #543 LH	1	1	VAN R DRIVE					
	02	74913-E0310	MAT-REAR SEAT LOWER BLACK #543 LH	1	1	VAN(LD)					
	1001	74920-E0110	FELT-FLOOR FRONT RH	1	1	WAGON & VAN			Y	Y	74920-E0100
	1101	74921-E0110	FELT-FLOOR FRONT LH	1	1	WAGON & VAN			Y	Y	74921-E0100

NOTE:

© 1972 NISSAN MOTOR CO., LTD.

REVISED: DECEMBER, 1972
PRINTED IN JAPAN
C

FLOOR MAT (W & V)

S	KEY NO.	PART NO.	DESCRIPTION	Q'TY	UNIT PKG FOR DIST.	APPLIED MODEL	APPLIED DATE FROM	APPLIED DATE UP TO	ICA N	ICA F	SUPERSEDED
	12D1	74922-E0110	FELT-FLOOR FRONT CENTER	1	1	WAGON & VAN			Y	Y	74922-E0100
	D2	74923-E0110	FELT-FLOOR CENTER	1	1	WAGON & VAN			Y	Y	74923-E0100
*	13D1	74925-E0100	FELT-FLOOR REAR	2	1	WAGON & VAN					
	D2	74925-E0110	FELT-FLOOR REAR	2	1	WAGON & VAN			Y	Y	74925-E0100
	14D1	74927-E0110	FELT-FLOOR CENTER	1	1	WAGON & VAN			Y	Y	74927-E0100
	15D1	74920-E1210	FELT-FLOOR RH	1	1	WAGON & VAN			Y	Y	74920-E1200
	16D1	74921-E1210	FELT-FLOOR FRONT LH	1	1	WAGON & VAN			Y	Y	74921-E1200
	17D1	74932-78000	INSULATOR-FLOOR FRONT CENTER	1	1	WAGON & VAN					
	18D1	74933-73001	INSULATOR-FLOOR CENTER RH	1	1	WAGON & VAN					
	19D1	74934-73001	INSULATOR-FLOOR CENTER LH	1	1	WAGON & VAN					
	20D1	74938-73200	INSULATOR-REAR SEAT LOWER	1	1	WAGON & VAN					
	21D1	74985-E0400	RETAINER-REAR FLOOR FRONT	1		WAGON & VAN					
	22D1	00530-81320	SCREW-TAPPING	5		WAGON & VAN					
	23D1	74986-E0401	ASSY-RETAINER FLOOR REAR	1	1	WAGON & VAN					
	24D1	00531-01320	SCREW-TAPPING	6	50	WAGON & VAN					
	25D1	74960-E0500	MAT-REAR FLOOR	1	1	WAGON					
	D2	74960-E0401	MAT-REAR FLOOR	1	1	VAN					
	26D1	74986-36700	PLUG RUBBER 25	6	10	WAGON & VAN					
	27D1	74365-73000	PLUG-ANCHORAGE HOLE	4	10	WAGON & VAN					
	28D1	74365-E0400	PLUG-ANCHORAGE HOLE	4	10	VAN					
	29D1	74991-73000	PANEL-COVER HOLE 55	4	5	WAGON & VAN					
	30D1	74992-73000	PANEL-COVER HOLE 31	4	5	WAGON & VAN					
	31D1	00511-01310	SCREW-TAPPING	8	50	WAGON & VAN					

NOTE:

© 1972 NISSAN MOTOR CO., LTD.

PRINTED IN JAPAN

FLOOR MAT (W & V)

S	KEY NO.	PART NO.	DESCRIPTION	Q'TY	UNIT PKG FOR DIST.	APPLIED MODEL	APPLIED DATE FROM	APPLIED DATE UP TO	ICA N	ICA F	SUPERSEDED
	32D1	- G4919-89901	SET-HEEL MAT FRONT	1	1	OP WAGON & VAN					
	33D1	- G4191-89911	MAT-HEEL FRONT RH	1		OP WAGON & VAN					
	34D1	- G4919-89921	MAT-HEEL FRONT LH	1		OP WAGON & VAN					
	35D1	- G4919-89931	MAT-HEEL REAR	2		OP WAGON & VAN					

NOTE:

© 1972 NISSAN MOTOR CO., LTD.

REVISED: DECEMBER, 1972
PRINTED IN JAPAN

NOTE

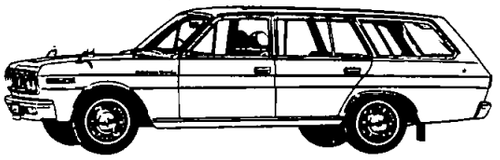

Printed in Japan

NISSAN MOTOR CO., LTD.

BODY SIDE PANEL & SILL BODY (W & V)

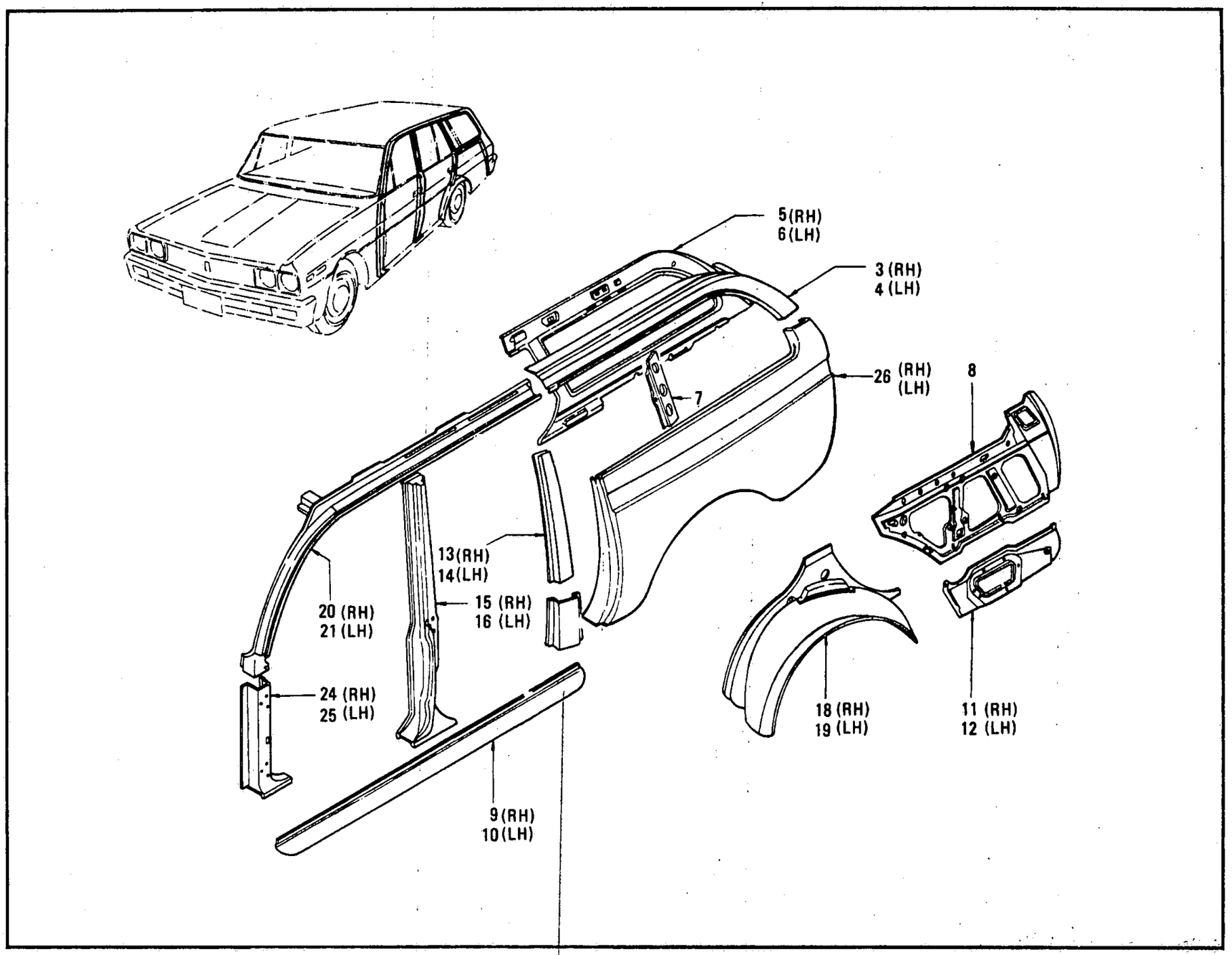

ILLUSTRATION **252**

© 1972 NISSAN MOTOR CO., LTD.

REVISED: DECEMBER, 1972

PRINTED IN JAPAN

BODY SIDE PANEL & SILL BODY (W & V)

S	KEY NO.	PART NO.	DESCRIPTION	Q'TY	UNIT PKG FOR DIST.	APPLIED MODEL	APPLIED DATE FROM	APPLIED DATE UP TO	ICA N	ICA F	SUPERSEDED
	1D1	76300-E0430	ASSY-BODY SIDE RH	1	1	WAGON & VAN					
	D2	76000-E0430	ASSY-BODY SIDE RH	1	1	WAGON & VAN					
	2D1	76300-E0430	ASSY-BODY SIDE LH	1	1	WAGON & VAN					
	D2	76001-E0430	ASSY-BODY SIDE LH	1	1	WAGON & VAN					
	3D1	76322-E0450	ASSY-RAIL BODY SIDE REAR OUTER RH	1	1	WAGON & VAN					
	4D1	76323-E0450	ASSY-RAIL BODY SIDE REAR OUTER LH	1	1	WAGON & VAN					
	5D1	76332-E0450	ASSY-RAIL SIDE WINDOW INNER RH	1	1	WAGON & VAN					
	6D1	76333-E0450	ASSY-RAIL SIDE WINDOW INNER LH	1	1	WAGON & VAN					
	7D1	76326-E0400	ASSY-SASH SIDE WINDOW LH	1	1	WAGON & VAN					
	8D1	76351-E0400	ASSY-REAR BODY SIDE INNER LH	1		WAGON & VAN					
	9D1	76400-73030	ASSY-SILL OUTER RH	1	1	WAGON & VAN			Y	Y	76400-E0100
	10D1	76401-73030	ASSY-SILL OUTER LH	1	1	WAGON & VAN			Y	Y	76401-E0100
	11D1	76731-E0400	ASSY-PANEL REAR FLOOR SIDE RH	1	1	WAGON & VAN					
*	12D1	76732-E0400	ASSY-PANEL REAR FLOOR SIDE LH	1	1	WAGON & VAN					
	13D1	76613-E0400	PANEL-REAR PILLAR UPPER RH	1	1	WAGON & VAN					
	14D1	76614-E0400	PANEL-REAR PILLAR UPPER LH	1	1	WAGON & VAN					
	15D1	76500-E0100	ASSY-PILLAR CENTER RH	1	1	WAGON & VAN					
	16D1	76501-E0100	ASSY-PILLAR CENTER LH	1	1	WAGON & VAN					
	17D1	76626-E0400	SASH-SIDE WINDOW FRONT	1	1	WAGON & VAN					
	18D1	76700-E0430	ASSY-REAR WHEEL HOUSE RH	1	1	WAGON & VAN					

NOTE:

© 1972 NISSAN MOTOR CO., LTD.

PRINTED IN JAPAN

BODY SIDE PANEL & SILL BODY (W & V)

S	KEY NO.	PART NO.	DESCRIPTION	Q'TY	UNIT PKG FOR DIST.	APPLIED MODEL	APPLIED DATE FROM	APPLIED DATE UP TO	ICA N	ICA F	SUPERSEDED
	1901	► 76701-E0430	ASSY-REAR WHEEL HOUSE LH	1	1	WAGON & VAN					
	2001	► 72115-E0100	COVER-WINDOW SHIELD PILLAR RH	1	1	WAGON & VAN					
	2101	► 72116-E0100	COVER-WINDOW SHIELD PILLAR LH	1	1	WAGON & VAN					
	2201	► 72105-E0100	ASSY-WINDOW SHIELD PILLAR INNER RH	1	1	WAGON & VAN					
	2301	► 72106-E0100	ASSY-WINDOW SHIELD PILLAR INNER LH	1	1	WAGON & VAN					
	2401	► 66100-E0150	ASSY-PILLAR FRONT RH	1	1	WAGON & VAN					
	2501	► 66101-E0150	ASSY-PILLAR FRONT LH	1	1	WAGON & VAN					
	2601	► 78111-E0430	PANEL-REAR FENDER RH	1	1	WAGON & VAN					
	02	► 78112-E0430	PANEL-REAR FENDER LH	1	1	WAGON & VAN					

NOTE:

C

PRINTED IN JAPAN

© 1972 NISSAN MOTOR CO., LTD.

REVISED: DECEMBER, 1972

NOTE

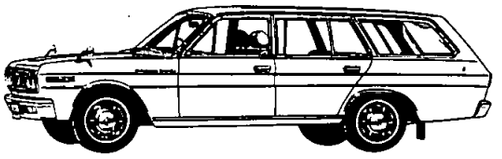

Printed in Japan

NISSAN MOTOR CO., LTD.

BODY SIDE TRIMMING (W & V)

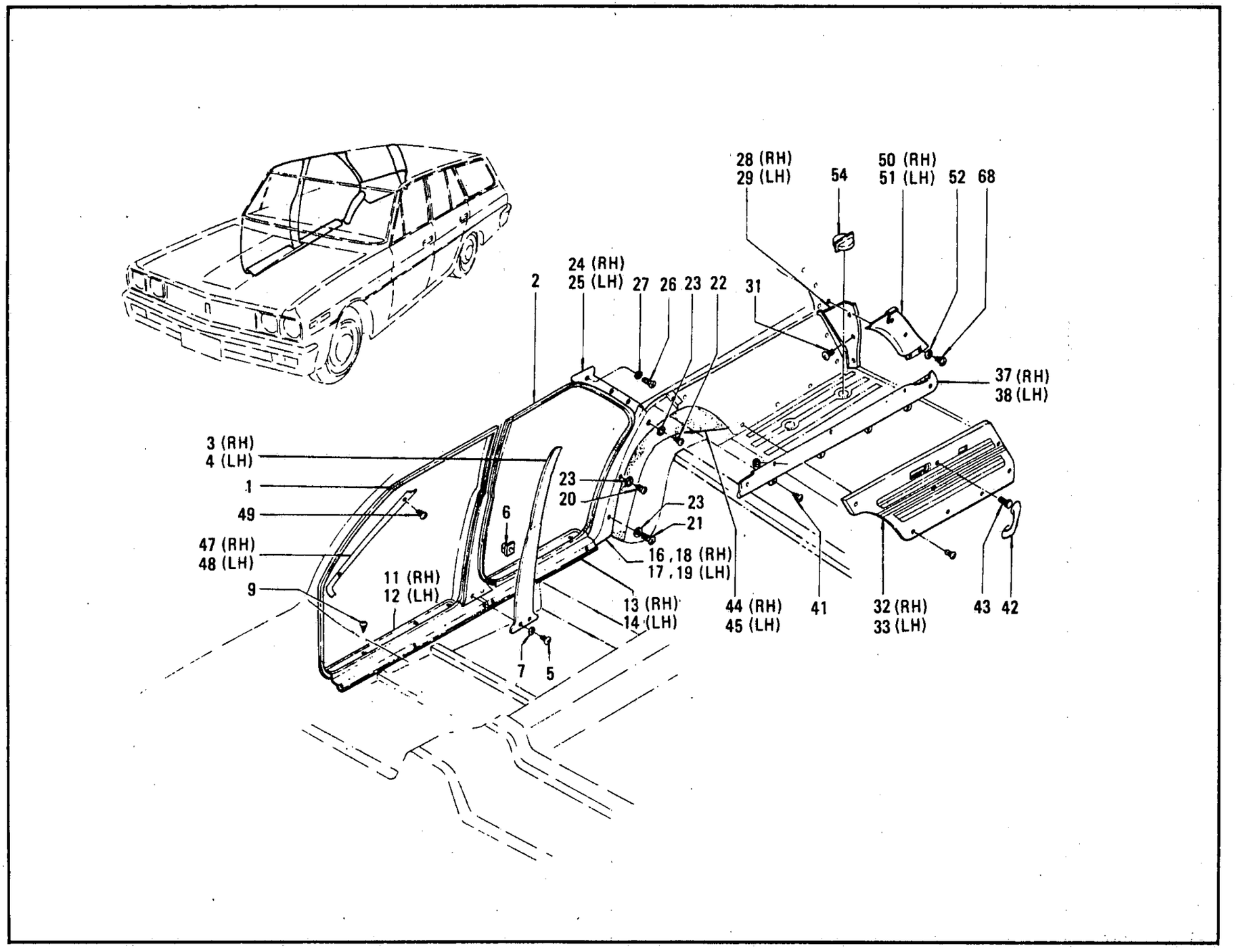

© 1972 NISSAN MOTOR CO., LTD.

REVISED: DECEMBER, 1972

PRINTED IN JAPAN

BODY SIDE TRIMMING (W & V)

S	KEY NO.	PART NO.	DESCRIPTION	QTY	UNIT PKG FOR DIST.	APPLIED MODEL	APPLIED DATE FROM	APPLIED DATE UP TO	ICA N	ICA F	SUPERSEDED
	101	76921-E0105	ASSY-WELT BODY SIDE FRONT #548 BLACK	2	1	WAGON & VAN					
	02	76921-E0106	ASSY-WELT BODY SIDE FRONT #549 BROWN	2	1	WAGON & VAN					
	03	76921-E0108	ASSY-WELT BODY SIDE FRONT #551 BLUE	2	1	WAGON & VAN					
	201	76922-E0405	ASSY-WELT BODY SIDE REAR #548 BLACK	2	1	WAGON & VAN			Y	Y	76922-E0401
	02	76922-E0406	ASSY-WELT BODY SIDE REAR #549 BROWN	2	1	WAGON & VAN			Y	Y	76922-E0402
	03	76922-E0408	ASSY-WELT BODY SIDE REAR #551 BLUE	2	1	WAGON & VAN			Y	Y	76922-E0404
	301	76913-E0101	ASSY-GARNISH CENTER PILLAR RH #1373 RED	1	1	WAGON & VAN					
	02	76913-E0102	ASSY-GARNISH CENTER PILLAR RH #1374 BLACK	1	1	WAGON & VAN					
	03	76913-E0103	ASSY-GARNISH CENTER PILLAR RH #1381 BROWN	1	1	WAGON & VAN					
	04	76913-E0104	ASSY-GARNISH CENTER PILLAR RH #1375 GREY	1	1	WAGON & VAN					
	05	76913-E0105	ASSY-GARNISH CENTER PILLAR RH #1703 BLUE	1	1	WAGON & VAN					
	401	76914-E0101	ASSY-GARNISH CENTER PILLAR LH #1373 RED	1	1	WAGON & VAN					
	02	76914-E0102	ASSY-GARNISH CENTER PILLAR LH #1374 BLACK	1	1	WAGON & VAN					
	03	76914-E0103	ASSY-GARNISH CENTER PILLAR LH #1381 BROWN	1	1	WAGON & VAN					
	04	76914-E0104	ASSY-GARNISH CENTER PILLAR LH #1375 GREY	1	1	WAGON & VAN					

NOTE:

© 1972 NISSAN MOTOR CO., LTD.

PRINTED IN JAPAN

BODY SIDE TRIMMING (W & V)

S	KEY NO.	PART NO.	DESCRIPTION	Q'TY	UNIT PKG FOR DIST.	APPLIED MODEL	APPLIED DATE FROM	APPLIED DATE UP TO	ICA N	ICA F	SUPERSEDED
	405	76914-E0105	ASSY-GARNISH CENTER PILLAR LH #1375 BLUE	1	1	WAGON & VAN					
	501	00530-61620	SCREW-TAPPING #6X16	8	50	WAGON & VAN					
	601	96706-89900	GROMMET-SCREW #6	8	10	WAGON & VAN					
	701	80999-89900	WASHER-FINISH #6	6	50	WAGON & VAN					
	801	73918-10601	GARNISH-FASTHNER MOULDING FIXING	2	50	WAGON & VAN					
	901	76959-73001	SCREW-TAPPING	24	10	WAGON & VAN					
	1001	00543-81620	SCREW-TAPPING T/H #8BX16	2	50	WAGON & VAN					
	1101	76951-E1100	PLATE-KICKING FRONT RH	1	1	WAGON & VAN					
	1201	76952-E1100	PLATE-KICKING FRONT LH	1	1	WAGON & VAN					
	1301	76953-E1100	PLATE-KICKING REAR RH	1	1	WAGON & VAN					
	1401	76954-E1100	PLATE-KICKING REAR LH	1	1	WAGON & VAN					
	1501	76958-E0100	SPACER-RUBBER KICKING PLATE	10	10	WAGON & VAN					
	1601	76917-E0400	GARNISH-REAR WHEEL HOUSE RH #1703 BLUE	1	1	WAGON & VAN					
	02	76917-E0401	GARNISH-REAR WHEEL HOUSE RH #1381 BROWN	1	1	WAGON & VAN					
	1701	76918-E0400	GARNISH-REAR WHEEL HOUSE LH #1703 BLUE	1	1	WAGON & VAN					
	02	76918-E0401	GARNISH-REAR WHEEL HOUSE LH #1381 BROWN	1	1	WAGON & VAN					
	1801	76917-E0402	GARNISH-REAR WHEEL HOUSE RH #1374 BLACK	1	1	VAN VAN-DX					
	1901	76918-E0402	GARNISH-REAR WHEEL HOUSE LH #1374 BLACK	1	1	VAN VAN-DX					
	2001	00530-81320	SCREW-TAPPING #8X13	4		WAGON & VAN					

NOTE:

© 1972 NISSAN MOTOR CO., LTD.

REVISED: DECEMBER, 1972
PRINTED IN JAPAN

BODY SIDE TRIMMING (W & V)

S	KEY NO.	PART NO.	DESCRIPTION	Q'TY	UNIT PKG FOR DIST.	APPLIED MODEL	APPLIED DATE FROM	APPLIED DATE UP TO	ICA N	ICA F	SUPERSEDED
	2101	00530-82620	SCREW-TAPPING #8X26	2	50	WAGON & VAN					
	2201	00520-81310	SCREW-TAPPING #8X13	2	50	WAGON & VAN					
	2301	80999-89901	WASHER-FINISH #8	6	5	WAGON & VAN					
	2401	76915-E0500	GARNISH-REAR PILLAR RH #1336	1	1	WAGON					
	2501	76916-E0500	GARNISH-REAR PILLAR LH #1336	1	1	WAGON					
	2601	00530-61320	SCREW-TAPPING #6X13	6	50	WAGON					
	2701	80999-89900	WASHER-FINISH #6	6	50	WAGON					
	2801	76900-E0500	ASSY-FINISH REAR SIDE RH #1703	1	1	WAGON					
	02	76900-E0501	ASSY-FINISH REAR SIDE RH #1381	1	1	WAGON					
	2901	76901-E0500	ASSY-FINISH REAR SIDE LH #1703	1	1	WAGON					
	02	76901-E0501	ASSY-FINISH REAR SIDE LH #1381	1	1	WAGON					
	3001	80919-89904	CLIP-DOOR FINISH	14	10	WAGON & VAN					
	3101	00530-61320	SCREW-TAPPING #6X13	6	50	WAGON					
	3201	76900-E0400	ASSY-FINISH REAR SIDE RH #1374 BLACK	1	1	VAN VAN-DX					
	02	76900-E0401	ASSY-FINISH REAR SIDE RH #1381 BROWN	1	1	VAN VAN-DX					
	3301	76901-E0400	ASSY-FINISH REAR SIDE LH #1374 BLACK	1	1	VAN VAN-DX					
	02	76901-E0401	ASSY-FINISH REAR SIDE LH #1381 BROWN	1	1	VAN VAN-DX					
	3401	76948-E0400	RETAINER-REAR SIDE FINISH RH	1	1	VAN VAN-DX					
	3501	76949-E0400	RETAINER-REAR SIDE FINISH LH	1	1	VAN VAN-DX					

NOTE:

© 1972 NISSAN MOTOR CO., LTD.

PRINTED IN JAPAN

BODY SIDE TRIMMING (W & V)

S	KEY NO.	PART NO.	DESCRIPTION	Q'TY	UNIT PKG FOR DIST.	APPLIED MODEL	APPLIED DATE FROM	APPLIED DATE UP TO	ICA N	ICA F	SUPERSEDED
	3601	00521-01310	SCREW-TAPPING	8		WAGON & VAN					
	3701	76905-E0500	ASSY-GARNISH REAR SIDE RH #1703 BLUE	1	1	WAGON					
	02	76905-E0501	ASSY-GARNISH REAR SIDE RH #1381 BROWN	1	1	WAGON					
	3801	76906-E0500	ASSY-GARNISH REAR SIDE LH #1703 BLUE	1	1	WAGON					
	02	76906-E0501	ASSY-GARNISH REAR SIDE LH #1381 BROWN	1	1	WAGON					
	3901	00521-01310	SCREW-TAPPING F/H #10X13	8		WAGON					
	4001	80999-89900	WASHER-FINISH #6	8	50	WAGON					
	4101	00530-61320	SCREW-TAPPING #6X13	8	50	WAGON					
	4201	73940-78800	ASSY-ASSIST STRAP FRONT	2	1	WAGON					
	4301	00334-41610	SCREW-MACHINE	4	50	WAGON					
	4401	74940-E0402	COVER-REAR WHEEL HOUSE RH #1374 BLACK	1	1	WAGON & VAN					
	02	74940-E0401	COVER-REAR WHEEL HOUSE RH #1381 BROWN	1	1	WAGON & VAN					
•	03	74940-E0400	COVER-REAR WHEEL HOUSE RH #1703 BLUE	1	1	WAGON & VAN					
	4501	74941-E0402	COVER-REAR WHEEL HOUSE LH #1374 BLACK	1	1	WAGON & VAN					
	02	74941-E0401	COVER-REAR WHEEL HOUSE LH #1381 BROWN	1	1	WAGON & VAN					
•	03	74941-E0400	COVER-REAR WHEEL HOUSE LH #1703 BLUE	2	1	WAGON & VAN					
	4601	74942-E0400	PAD-REAR WHEEL HOUSE	2		WAGON & VAN					
	4701	76911-E0100	GARNISH-WEATHERSTRIP PILLAR RH #179 BLACK	1	1	WAGON & VAN					

NOTE:

© 1972 NISSAN MOTOR CO., LTD.

REVISED: DECEMBER, 1972
PRINTED IN JAPAN

BODY SIDE TRIMMING (W & V)

S	KEY NO.	PART NO.	DESCRIPTION	Q'TY	UNIT PKG FOR DIST.	APPLIED MODEL	APPLIED DATE FROM	APPLIED DATE UP TO	ICA N	ICA F	SUPERSEDED
	4801	76912-E0100	GARNISH-WEATHERSTRIP PILLAR LH #117 BLACK	1	1	WAGON & VAN					
	4901	00530-61642	SCREW-TAPPING	4	50	WAGON & VAN					
	5001	76907-E0500	ASSY-GARNISH TAIL GATE PILLAR RH #1336 WHITE	1	1	WAGON					
	5101	76908-E0500	ASSY-GARNISH TAIL GATE B PILLAR LH #1336 WHITE	1	1	WAGON					
	5201	80999-89900	WASHER-FINISH	4	50	WAGON					
	5301	00530-61320	SCREW-TAPPING	8	50	WAGON					
	5401	96502-18001	ASSY-ASH TRAY	2	1	WAGON			Y	Y	96502-18000

NOTE:

© 1972 NISSAN MOTOR CO., LTD.

PRINTED IN JAPAN

NOTE

NISSAN MOTOR CO., LTD.

Printed in Japan

NOTE

Printed in Japan

NISSAN MOTOR CO., LTD.

BODY SIDE FITTING (W & V)

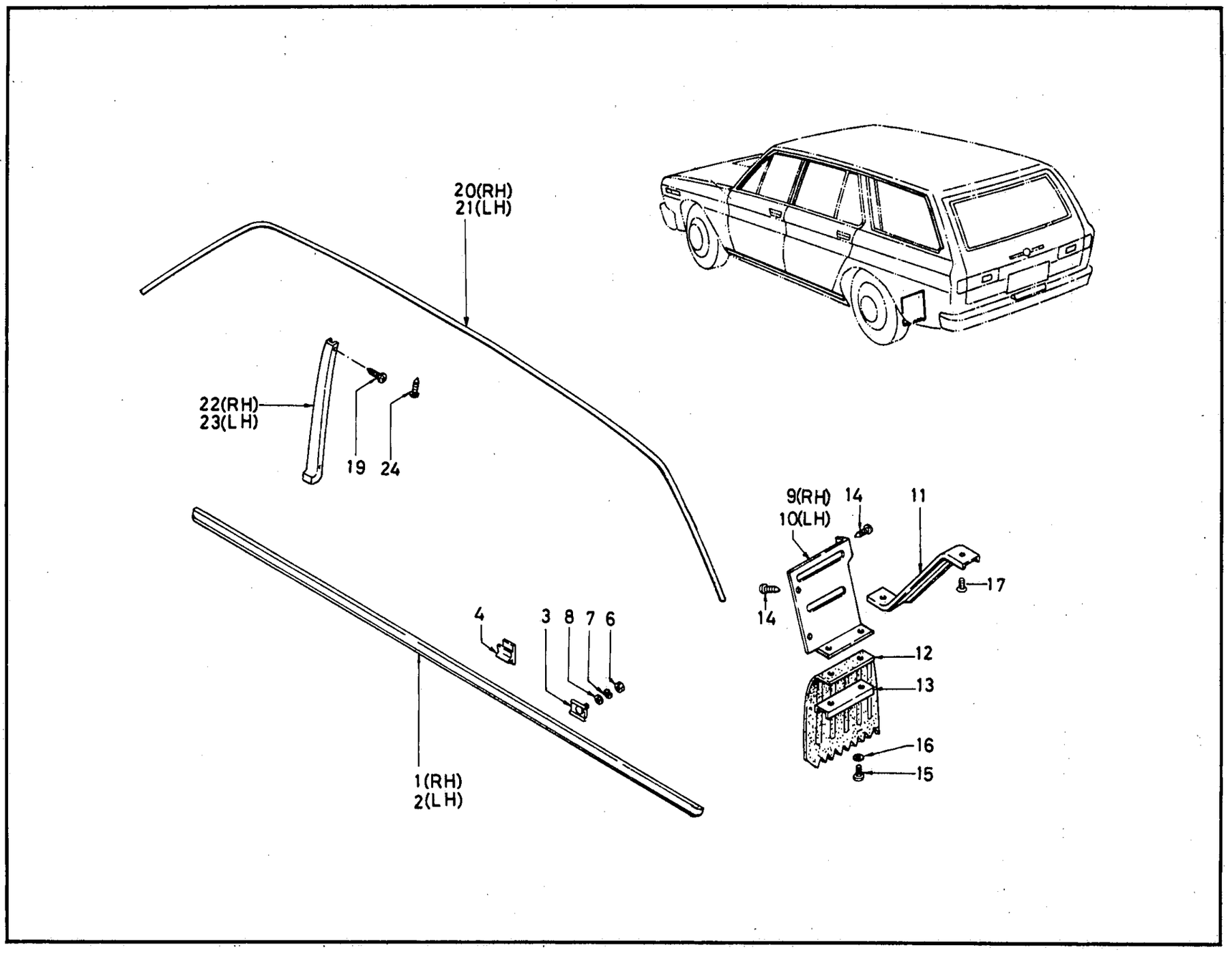

© 1972 NISSAN MOTOR CO., LTD.

REVISED: DECEMBER, 1972

PRINTED IN JAPAN

C

NISSAN

BODY SIDE FITTING (W & V)

S	KEY NO.	PART NO.	DESCRIPTION	QTY	UNIT PKG FOR DIST.	APPLIED MODEL	APPLIED DATE FROM	APPLIED DATE UP TO	ICA N	ICA F	SUPERSEDED
	101	76482-73002	MOULDING-BODY SILL RH	1	1	WAGON & VAN					
	201	76483-73002	MOULDING-BODY SILL RH	1	1	WAGON & VAN					
	301	76488-73001	CLIP-MOULDING BODY SILL	8	10	WAGON & VAN					
	401	76489-73000	CLIP-SILL MOULDING	4	10	WAGON & VAN					
	501	76486-10603	RETAINER-BODY SILL	4	10	WAGON & VAN					
	601	00911-14410	NUT-HEX 1/4	4	50	WAGON & VAN					
	701	00915-11410	WASHER- SPRING LOCK 1/4 #2	4	50	WAGON & VAN					
	801	00915-51410	WASHER-PLAIN 1/4	4	50	WAGON & VAN					
	901	76842-73200	BRACKET-SPLASH BOARD RH	1	1	WAGON & VAN					
	1001	76843-73200	BRACKET-SPLASH BOARD LH	1	1	WAGON & VAN					
	1101	76844-73200	STAY-SPLASH BOARD	2	1	WAGON & VAN					
	1201	76845-73200	BOARD-SPLASH	2	1	WAGON & VAN					
	1301	76847-73200	PLATE-FIXING SPLASH	2	1	WAGON & VAN					
	1401	00514-01610	SCREW-TAPPING TYPE B	8	50	WAGON & VAN					
	1501	00314-01610	SCREW-MACHINE #10	2	50	WAGON & VAN					
	1601	00915-41010	WASHER-PLAIN	2	50	WAGON & VAN					
	1701	74520-89900	RIVET-GESIPA 4X6	2	10	WAGON & VAN					
	1801	76849-E0400	ASSY-DRAIN PLUG REAR FENDER	1	5	WAGON & VAN					
	1901	00541-01010	SCREW-TAPPING #10	2		WAGON & VAN					
	2001	73800-E0500	MOULDING-ROOF DRIP RH	1	1	WAGON					
	2101	73801-E0500	MOULDING-ROOF DRIP LH	1	1	WAGON					
	2201	76805-E0100	MOULDING-CENTER PILLAR RH	1	1	WAGON					
	2301	76806-E0100	MOULDING-CENTER PILLAR LH	1	1	WAGON					

NOTE:

© 1972 NISSAN MOTOR CO., LTD.

PRINTED IN JAPAN

BODY SIDE FITTING (W & V)

S	KEY NO.	PART NO.	DESCRIPTION	QTY	UNIT PKG FOR DIST.	APPLIED MODEL	APPLIED DATE FROM	APPLIED DATE UP TO	ICA N	ICA F	SUPERSEDED
	2401	72832-32200	SCREW-TAPPING	8	50	WAGON					

NOTE:

© 1972 NISSAN MOTOR CO., LTD.

REVISED: DECEMBER, 1972

PRINTED IN JAPAN

NOTE

Printed in Japan

NISSAN MOTOR CO., LTD.

REAR FENDER & BUMPER (W & V)

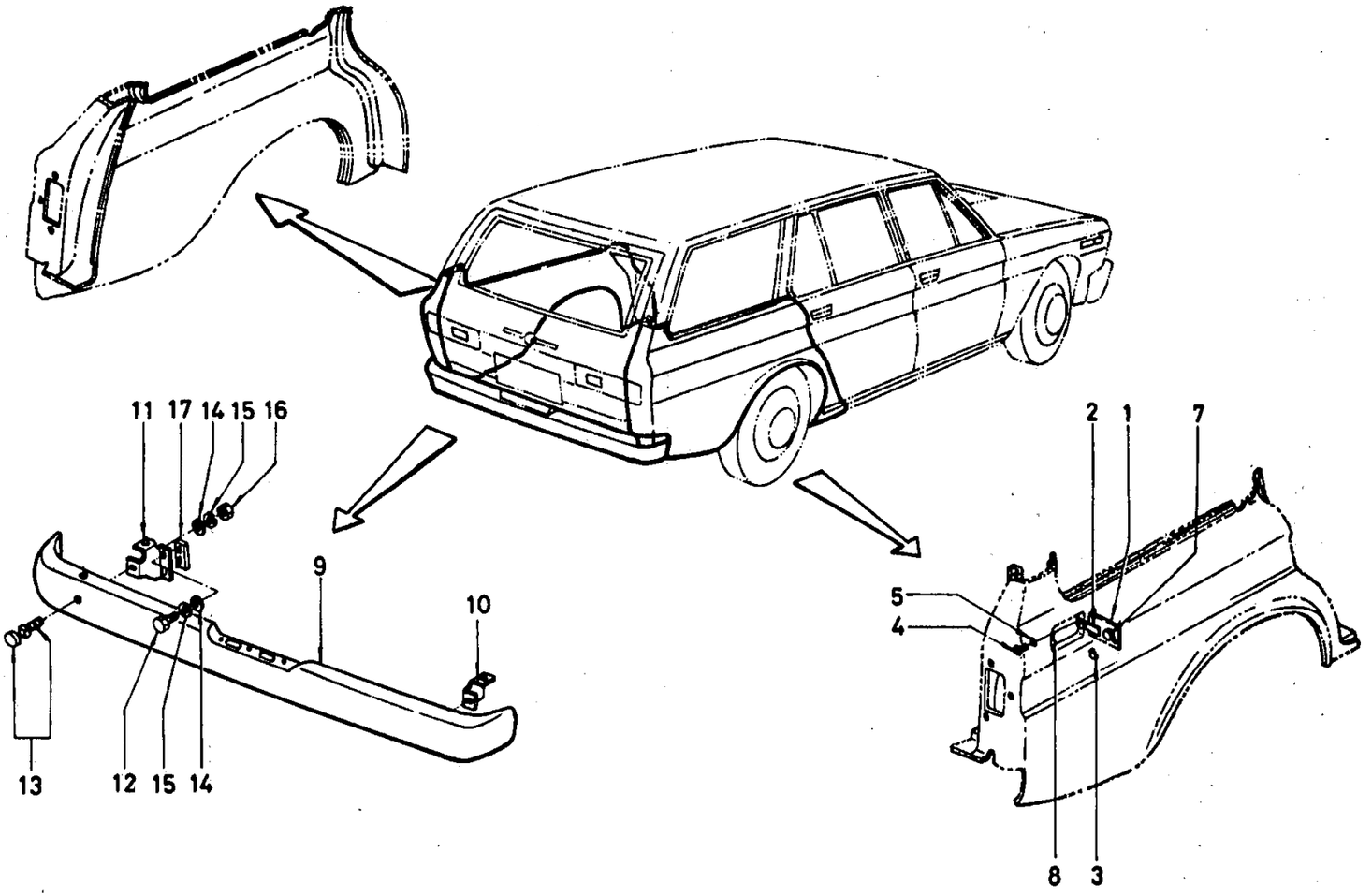

ILLUSTRATION **255**

© 1972 NISSAN MOTOR CO., LTD.

REVISED: DECEMBER, 1972

PRINTED IN JAPAN

C

REAR FENDER & BUMPER (W & V)

S	KEY NO.	PART NO.	DESCRIPTION	QTY	UNIT PKG FOR DIST.	APPLIED MODEL	APPLIED DATE FROM	APPLIED DATE UP TO	ICA N	ICA F	SUPERSEDED
	101	78140-E0400	ASSY-COVER FILLER	1	1	WAGON & VAN					
	201	78813-E0450	STOPPER-LID GAS FILLER	1	5	WAGON & VAN					
	301	68643-32200	BUMPER-GLOVE BOX LID	2	50	WAGON & VAN					
	401	00414-01210	SCREW-MACHINE	4	50	WAGON & VAN					
	501	77730-89900	WASHER-PLAIN	4	10	WAGON & VAN					
	601	78810-E0400	ASSY-LID GAS FILLER	1	1	WAGON & VAN					
	701	84360-73200	ASSY-CYLINDER GAS FILLER LID	1	1	WAGON & VAN					
	801	80590-21000	CLIP-PETAINING	1	10	WAGON & VAN					
	901	85001-E0400	BUMPER-REAR	1	1	WAGON & VAN					
	1001	85211-E0400	STAY-REAR BUMPER RH	1	1	WAGON & VAN					
	1101	85212-E0400	STAY-REAR BUMPER LH	1	1	WAGON & VAN					
	1201	00114-52510	BOLT	4	50	WAGON & VAN					
	1301	62666-73000	ASSY-BOLT BUMPER	4	10	WAGON & VAN					
	1401	00915-51510	WASHER-PLAIN	8	50	WAGON & VAN					
	1501	00915-21510	WASHER-SPRING	8	50	WAGON & VAN					
	1601	00911-24510	NUT	4	50	WAGON & VAN					
	1701	85214-E0400	SHIM-REAR BUMPER	2	10	WAGON & VAN					

NOTE:

© 1972 NISSAN MOTOR CO., LTD.

PRINTED IN JAPAN

NOTE

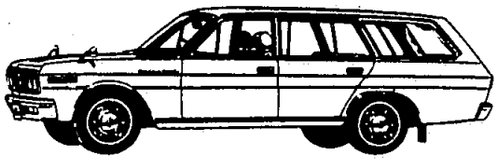

NISSAN MOTOR CO., LTD.

Printed in Japan

NOTE

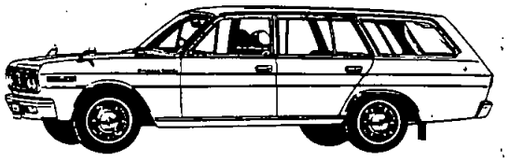

Printed in Japan

NISSAN MOTOR CO., LTD.

FRONT DOOR PANEL (W & V)

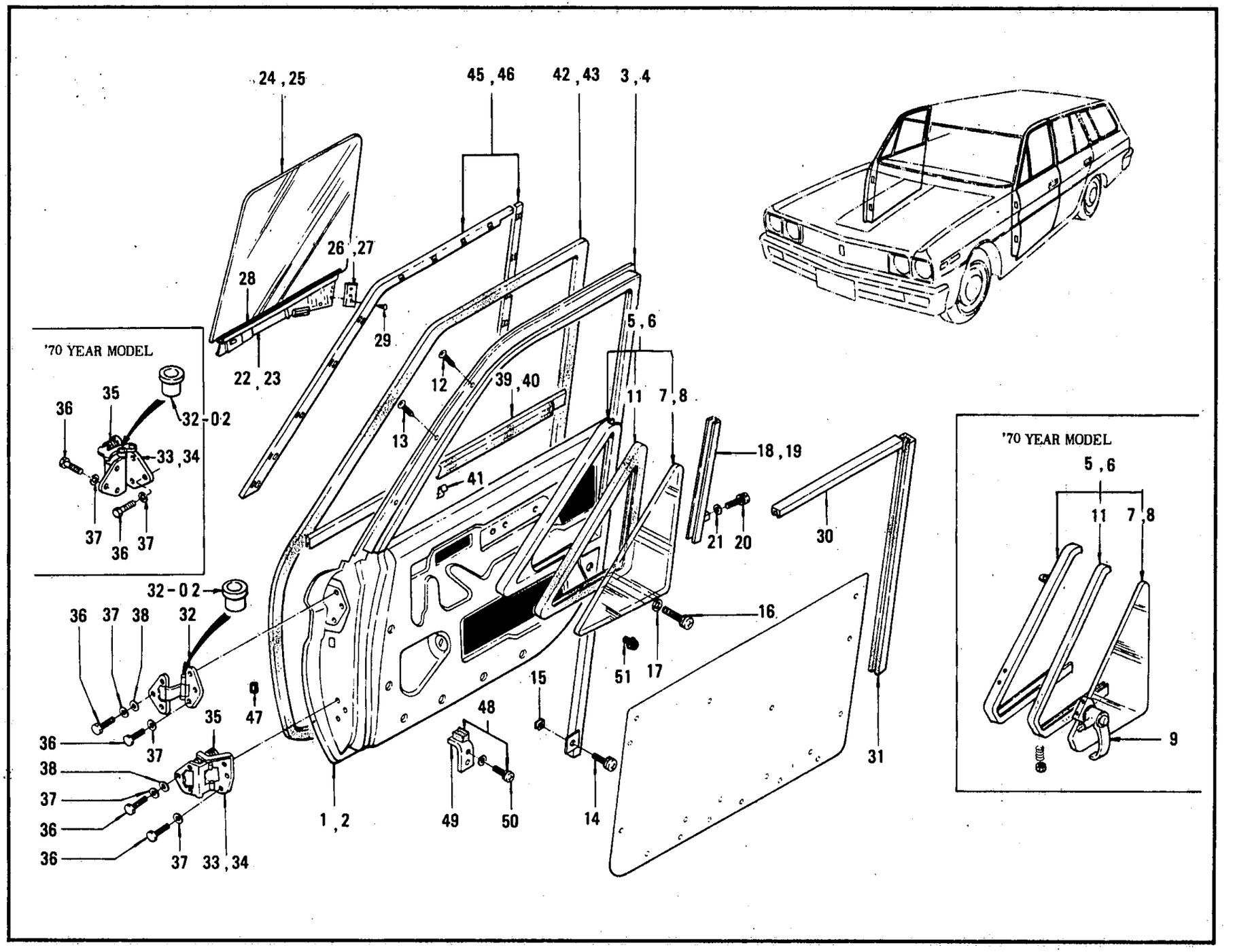

© 1972 NISSAN MOTOR CO., LTD.

REVISED: DECEMBER, 1972

PRINTED IN JAPAN

FRONT DOOR PANEL (W & V)

S	KEY NO.	PART NO.	DESCRIPTION	Q'TY	UNIT PKG FOR DIST.	APPLIED MODEL	APPLIED DATE FROM	APPLIED DATE UP TO	ICA N	ICA F	SUPERSEDED
	101	80100-E0130	ASSY-PANEL FRONT DOOR RH	1	1	W & V					
	201	80101-E0130	ASSY-PANEL FRONT DOOR LH	1	1	W & V					
	301	80210-E0100	ASSY-SASH FRONT DOOR RH	1	1	W & V					
	401	80211-E0100	ASSY-SASH FRONT DOOR	1	1	W & V					
	501	80202-E0300	ASSY-VENT FRONT DOOR RH	1	1	W & V		0969			
	02	80202-E3200	ASSY-VENT FRONT DOOR RH	1	1	WAGON VAN-DELUXE	1069				
	601	80203-E0300	ASSY-VENT FRONT DOOR LH	1	1	W & V		0969			
	02	80203-E3200	ASSY-VENT FRONT DOOR LH	1	1	WAGON VAN-DELUXE	1069				
	701	80255-E0100	GLASS-VENT FRONT DOOR RH TINTED & TEMPERED 5.0T	1	1	WAGON		0969			
	02	80255-E0300	GLASS-VENT FRONT DOOR RH TEMPERED 5.0T	1	1	VAN		0969			
	03	80255-E3200	GLASS-VENT FRONT DOOR RH TINTED & TEMPERED 5.0T	1	1	WAGON VAN-DELUXE		0969			
	801	80256-E0100	GLASS-VENT FRONT DOOR LH TINTED & TEMPERED 5.0T	1	1	WAGON		0969			
	02	80256-E0300	GLASS DOOR VENT FRONT DOOR LH	1	1	VAN		0969			
	03	80256-E3200	GLASS-VENT FRONT DOOR LH TINTED & TEMPERED 5.0T	1	1	WAGON VAN-DELUXE		0969			
	901	80260-E3200	ASSY-CATCH HANDLE VENT RH	1	1	W & V	1069				
	1001	80261-E3200	ASSY-CATCH HANDLE VENT LH	1	1	W & V	1069				
	1101	80335-E0100	RUBBER-GLASS RUN A	1	5	W & V					
	1201	00320-80810	SCREW-MACHINE #8-32UNC FIXING VENT TO SASH	2	50	W & V					
	1301	80294-73000	SCREW-TAPPING FIXING VENT TO SASH	4	10	W & V					

NOTE:

C

PRINTED IN JAPAN

© 1972 NISSAN MOTOR CO., LTD.

FRONT DOOR PANEL (W & V)

S	KEY NO.	PART NO.	DESCRIPTION	Q'TY	UNIT PKG FOR DIST.	APPLIED MODEL	APPLIED DATE FROM	APPLIED DATE UP TO	ICA N	ICA F	SUPERSEDED
*	1401	00314-41210	SCREW-MACHINE W/LOCK WASHER FIXING VENT TO SASH	2	50	W & V					
	02	00314-41212	SCREW-MACHINE W/LOCK WASHER FIXING VENT TO SASH	2	50	W & V			Y	N	00314-41210
	1501	80298-73000	NUT-SPRING RETAINING FIXING VENT TO PANEL LOWER	2	10	W & V					
	1601	00314-44510	SCREW-MACHINE W/LOCK WASHER FIXING VENT TO PANEL	2	50	W & V					
	1701	00915-51410	WASHER-PLAIN 1/4 FIXING VENT TO PANEL LOWER	2	50	W & V					
	1801	80214-E0100	ASSY-SASH FRONT DOOR LOWER RH	1	1	W & V					
	1901	80215-E0100	ASSY-SASH FRONT DOOR LOWER LH	1	1	W & V					
	2001	00314-41610	SCREW-MACHINE W/LOCK WASHER FIXING SASH TO PANEL	4	50	W & V					
	2101	00915-41410	WASHER-PLAIN 1/4 FIXING SASH LOWER TO PANEL	4	50	W & V					
	2201	80302-E0100	ASSY-CHANNEL GLASS FRONT DOOR BOTTOM RH	1	1	W & V					
	2301	80303-E0100	ASSY-CHANNEL GLASS FRONT DOOR BOTTOM LH	1	1	W & V					
	2401	80311-E0100	GLASS-WINDOW FR DOOR RH TINTED & TEMPERED 5.0T	1	1	WAGON VAN DELUXE					
	02	80311-E0300	GLASS-WINDOW FR DOOR RH TEMPERED 5.0T	1	1	VAN		0969			
	2501	80312-E0100	GLASS-WINDOW FR DOOR LH TINTED & TEMPERED 5.0T	1	1	WAGON VAN-DELUXE					
	02	80312-E0300	GLASS-WINDOW FR DOOR LH TEMPERED 5.0T	1	1	VAN		0969			

NOTE:

© 1972 NISSAN MOTOR CO., LTD.

REVISED: DECEMBER, 1972
PRINTED IN JAPAN

FRONT DOOR PANEL (W & V)

S	KEY NO.	PART NO.	DESCRIPTION	Q'TY	UNIT PKG FOR DIST.	APPLIED MODEL	APPLIED DATE FROM	APPLIED DATE UP TO	ICA N	ICA F	SUPERSEDED
	2601	80304-E0100	GUIDE-FRONT DOOR WINDOW BOOTOM RH	1	5	W & V					
	2701	80305-E0100	GUIDE FRONT DOOR WINDOW BOTTOM LH	1	5	W & V					
	2801	80306-E0100	RUBBER-GLAZING FRONT DOOR WINDOW	2	5	W & V					
	2901	00660-40810	RIVET	6	50	W & V					
	3001	80336-E0100	RUBBER-GLASS RUN B	1	5	W & V					
	3101	80337-E0100	RUBBER-GLASS RUN C	1	5	W & V					
	3201	80400-73000	ASSY-HINGE FRONT DOOR UPPER	2	1	W & V					
	02	H0400-73002	BUSH-DOOR HINGE	2	10	W & V					
*	3301	80420-E0100	ASSY-HINGE FRONT DOOR LOWER RH	1		W & V		0969			
	02	80420-E3200	ASSY-HINGE FRONT DOOR LOWER RH	1	1	W & V	1069				
*	3401	80421-E0100	ASSY-HINGE FRONT DOOR LOWER LH	1		W & V		0969			
	02	80421-E3200	ASSY-HINGE FRONT DOOR LOWER LH	1	1	W & V	1069				
	3501	80422-73001	SPRING-HINGE DOOR LOWER	1	5	W & V		0969			
	02	80432-28501	SPRING-HINGE DOOR LOWER	1	10	W & V	1069				
	3601	00144-52010	BOLT-HEXAGON 5/16-24UNF	24	50	W & V					
	3701	00915-11510	WASHER-SPRING LOCK	24	50	W & V					
	3801	00915-51510	WASHER-PLAIN 5/16 #2	12	50	W & V					
	3901	80820-E0100	ASSY-MOULDING FRONT DOOR OUT SIDE RH	1	1	W & V					
	4001	80821-E0100	ASSY-MOULDING FRONT DOOR OUT SIDE LH	1	1	W & V					

NOTE:

© 1972 NISSAN MOTOR CO., LTD.

PRINTED IN JAPAN

FRONT DOOR PANEL (W & V)

S	KEY NO.	PART NO.	DESCRIPTION	Q'TY	UNIT PKG FOR DIST.	APPLIED MODEL	APPLIED DATE FROM	APPLIED DATE UP TO	ICA N	ICA F	SUPERSEDED
	4101	80825-E0100	CLIP-MOULDING DOOR	10	10	W & V					
	4201	80830-E0100	ASSY-W/STRIP FRONT DOOR RH	1	1	W & V					
	4301	80831-E0100	ASSY-W/STRIP FRONT DOOR LH	1	1	W & V					
*	4401	80840-21000	COVER-DRAIN HOLE	2	5	W & V					
	02	80840-21001	COVER-DRAIN HOLE	1	10	W & V			Y	Y	80840-21000
	03	80842-73000	COVER-DRAIN HOLE	2	10	W & V					
	4501	80280-E0100	SET-COVER SASH FR DOOR RH	1	1	W & V-DX					
	4601	80281-E0100	SET-COVER SASH FR DOOR LH	1	1	W & V-DX					
	4701	76816-73000	GROMMET-RUBBER	2	10	W & V					
	4801	80860-E0100	ASSY-GLASS STOPPER	2	1	W & V					
*	4901	80317-00800	CUSHION-WINDOW GLASS	2	50	W & V					
	02	80317-E0199	CUSHION-WINDOW GLASS	2	5	W & V			Y	N	80317-00800
	5001	00314-41214	SCREW-MACHINE WITH SELF LOCK WASHER	8	50	W & V					
	5101	80865-E0100	RUBBER-BUMPER FRONT DOOR	2	10	W & V					
	5201	H0202-E0101	RUBBER-GLASS RH	1	1	W&V		0969			
	02	H0202-E0101	RUBBER-GLASS LH	1	1	W&V		0969			
	03	H0202-E3201	RUBBER-GLASS RH	1	1	W&V	1069				
	04	H0203-E3201	RUBBER-GLASS LH	1	1	W&V	1069				

NOTE:

© 1972 NISSAN MOTOR CO., LTD.

REVISED: DECEMBER, 1972
PRINTED IN JAPAN

NOTE

Printed in Japan

NISSAN MOTOR CO., LTD.

FRONT DOOR LOCK & REGULATOR (W & V)

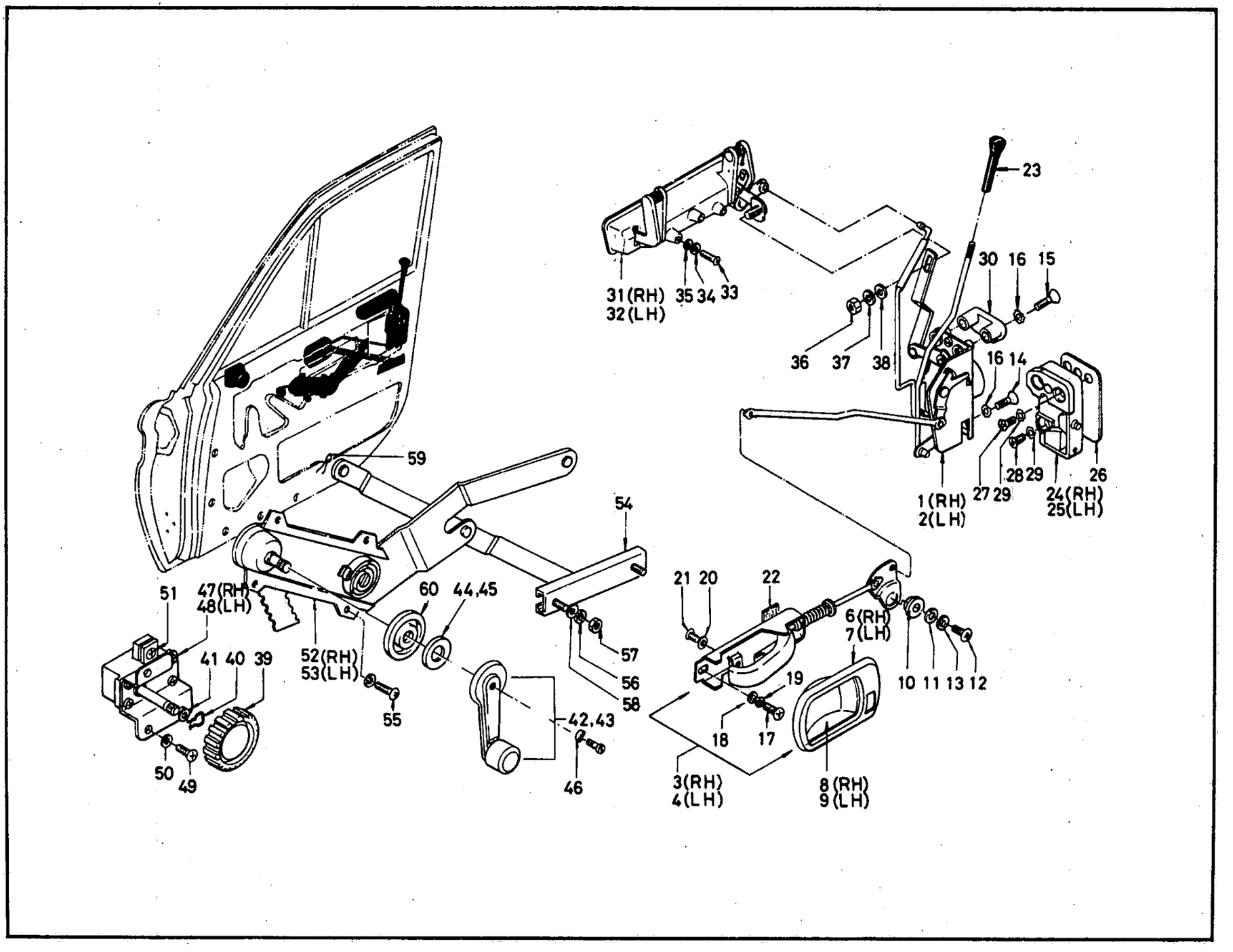

ILLUSTRATION **257**

© 1972 NISSAN MOTOR CO., LTD.

REVISED: DECEMBER, 1972

PRINTED IN JAPAN

FRONT DOOR LOCK & REGULATOR (W & V)

S	KEY NO.	PART NO.	DESCRIPTION	Q'TY	UNIT PKG FOR DIST.	APPLIED MODEL	APPLIED DATE FROM	APPLIED DATE UP TO	ICA N	ICA F	SUPERSEDED
	1D1	80502-E0101	ASSY-LOCK FRONT DOOR RH	1	1	WAGON & VAN			Y	Y	80502-E0100
	2D1	80503-E0101	ASSY-LOCK FRONT DOOR LH	1	1	WAGON & VAN			Y	Y	80503-E0100
	3D1	80504-E0100	ASSY-REGULATOR CONTROL DOOR LOCK RH	1	1	WAGON & VAN					
	4D1	80505-E0100	ASSY-REGULATOR CONTROL DOOR LOCK LH	1	1	WAGON & VAN					
	5D1	80599-E0100	COVER-DUST	1	1	WAGON & VAN					
	6D1	80512-E0100	ESCUTCHEON-REGULATOR CONTROL RH	1	5	WAGON & VAN					
	D2	80512-E0101	ESCUTCHEON-REGULATOR CONTROL RH	1	5	WAGON & VAN			C	N	80512-E0100
	7D1	80513-E0100	ESCUTCHEON-REGULATOR CONTROL LH	1	5	WAGON & VAN					
	D2	80513-E0101	ESCUTCHEON-REGULATOR CONTROL LH	1	5	WAGON & VAN			C	N	80513-E0100
	8D1	80517-E0100	COVER-REGULATOR CONTROL RH	1	5	WAGON & VAN					
	D2	80517-E0101	COVER-REGULATOR CONTROL RH	1	5	WAGON & VAN			C	N	80517-E0100
	9D1	80518-E0100	COVER-REGULATOR CONTROL LH	1	5	WAGON & VAN					
	D2	80518-E0101	COVER-REGULATOR CONTROL LH	1	5	WAGON & VAN			C	N	80518-E0100
	10D1	80515-E0101	COLLAR-BELL CRANK	2	10	WAGON & VAN			Y	Y	80515-E0100
	11D1	08915-53610	WASHER-BELL CRANK	2	50	WAGON & VAN			Y	Y	80516-J0100
	12D1	00314-41610	SCREW-MACHINE	2	50	WAGON & VAN					
	13D1	00915-11410	WASHER-LOCK SPRING	2	50	WAGON & VAN					
	14D1	00324-40810	SCREW-MACHINE FIXING LOCK TO DOOR	4	50	WAGON & VAN					
	15D1	00324-42012	SCREW-MACHINE FIXING LOCK TO DOOR	4	50	WAGON & VAN					

NOTE:

© 1972 NISSAN MOTOR CO., LTD.

PRINTED IN JAPAN

FRONT DOOR LOCK & REGULATOR (W & V)

S	KEY NO.	PART NO.	DESCRIPTION	Q'TY	UNIT PKG FOR DIST.	APPLIED MODEL	APPLIED DATE FROM	APPLIED DATE UP TO	ICA N	ICA F	SUPERSEDED
	16D1	00916-41410	WASHER-TOOTH OUTERNAL FIXING LOCK TO DOOR	8	50	WAGON & VAN					
*	17D1	00414-40810	SCREW-MACHINE FIXING REMOTE CONTROL TO DOOR	4	50	WAGON & VAN					
	D2	00414-40812	SCREW-MACHINE FIXING REMOTE CONTROL TO DOOR	4	50	WAGON & VAN			Y	N	00414-40810
	18D1	00915-41410	WASHER-PLAIN FIXING REMOTE CONTROL TO DOOR	4	50	WAGON & VAN					
	19D1	00915-11410	WASHER-LOCK SPRING FIXING REMOTE CONTROL TO DOOR	4	50	WAGON & VAN					
	20D1	00916-40810	WASHER-TOOTH OUTERNAL FIXING COVER TO REMOTE CONT	2	50	WAGON & VAN					
	21D1	00420-80810	SCREW-MACHINE FIXING COVER TO REMOTE CONTROL	2		WAGON & VAN					
	22D1	80514-E0101	SILENCER-DOOR LOCK LINK	2	10	WAGON & VAN			Y	Y	80514-E0100
	23D1	80595-78803	KNOB-DOOR LOCK L=10 CHROME COATING	2	10	WAGON & VAN-DX					
	D2	80595-73002	KNOB-DOOR LOCK L=15 CHROME COATING	2	10	WAGON & VAN-DX					
	D3	80595-78804	KNOB-DOOR LOCK L=15 CHROME COATING	2	10	WAGON & VAN-DX			C	C	80595-78804
	D4	80595-18402	KNOB-DOOR LOCK L=5 CHROME COATING	2	10	WAGON & VAN-DX					
*	D5	80595-21003	KNOB-DOOR LOCK L=10 BLACK	2	10	VAN		0969			
	D6	80595-N1600	KNOB-DOOR LOCK L=10 BLACK	2	5	VAN			Y	N	80595-21003
*	D7	80595-21004	KNOB-DOOR LOCK L=15 BLACK	2	10	VAN		0969			
	D8	80595-N1601	KNOB-DOOR LOCK L=15 BLACK	2	5	VAN		0969	Y	N	80595-21004
*	D9	80595-21005	KNOB-DOOR LOCK L=5 BLACK	2	10	VAN		0969			

NOTE:

C

PRINTED IN JAPAN

© 1972 NISSAN MOTOR CO., LTD.

REVISED: DECEMBER, 1972

FRONT DOOR LOCK & REGULATOR (W & V)

S	KEY NO.	PART NO.	DESCRIPTION	Q'TY	UNIT PKG FOR DIST.	APPLIED MODEL	APPLIED DATE FROM	APPLIED DATE UP TO	ICA N	ICA F	SUPERSEDED
	2310	80595-N1602	KNOB-DOOR LOCK L=5 BLACK	2	5	VAN		0969	Y	N	80595-21005
*	11	80595-21003	KNOB-DOOR LOCK L=5 BLACK	2	10	VAN		0969	Y	N	80595-21005
	12	80595-N1600	KNOB-DOOR LOCK L=5 BLACK	2	5	VAN			Y	N	80595-21003
*	2401	80570-E0100	ASSY-STRIKER DOOR LOCK RH	1	1	WAGON & VAN					
	02	80570-E0101	ASSY-STRIKER DOOR LOCK RH	1	1	WAGON & VAN			Y	N	80570-E0100
*	2501	80571-E0100	ASSY-STRIKER DOOR LOCK LH	1	1	WAGON & VAN					
	02	80571-E0101	ASSY-STRIKER DOOR LOCK LH	1	1	WAGON & VAN			Y	N	80571-E0100
	2601	80575-E0100	SHIM-STRIKER	AR	5	WAGON & VAN					
	2701	00324-53010	SCREW-MACHINE	8	50	WAGON & VAN					
	2801	00324-51210	SCREW-MACHINE	4	50	WAGON & VAN					
	2901	00916-41510	WASHER-TOOTH OUTERNAL	12	50	WAGON & VAN					
*	3001	80572-E0100	GUIDE-STRIKER	2	5	WAGON & VAN					
	02	80572-E0101	GUIDE-STRIKER	2	10	WAGON & VAN			Y	N	80572-E0100
	3101	80605-E0101	ASSY-HANDLE DOOR	1	1	WAGON & VAN			Y	Y	80605-E0100
	3201	80606-E0101	ASSY-HANDLE DOOR OUTSIDE FRONT LH	1	1	WAGON & VAN			Y	Y	80606-E0100
	3301	00314-01214	SCREW-MACHINE	6	50	WAGON & VAN					
	3401	00915-11010	WASHER-LOCK	6	50	WAGON & VAN					
	3501	00915-41010	WASHER-PLAIN	6	50	WAGON & VAN					
	3601	00911-14010	NUT	2	50	WAGON & VAN					
	3701	00915-11010	WASHER-LOCK SPRING	2	50	WAGON & VAN					
	3801	00915-41010	WASHER-PLAIN	2	50	WAGON & VAN					
	3901	80752-E0101	ASSY-DIAL DOOR VENT REGULATOR	2	1	WAGON & VAN					

NOTE:

© 1972 NISSAN MOTOR CO., LTD.

PRINTED IN JAPAN

FRONT DOOR LOCK & REGULATOR (W & V)

S	KEY NO.	PART NO.	DESCRIPTION	Q'TY	UNIT PKG FOR DIST.	APPLIED MODEL	APPLIED DATE FROM	APPLIED DATE UP TO	ICA N	ICA F	SUPERSEDED
	4001	80757-E0100	LIFT-SPRING DIAL	2	10	WAGON & VAN					
	4101	80756-E0101	WASHER-REATING DIAL	2	10	WAGON & VAN					
	4201	80760-E0100	ASSY-HANDLE DOOR WINDOW REGULATOR	2	1	WAGON & VAN					
	4301	80764-E0100	ASSY-HANDLE DOOR WINDOW REGULATOR	2	10	WAGON & VAN					
	4401	80763-E0101	WASHER-SEATING HANDLE	2	10	WAGON & VAN			Y	Y	80763-E0100
*	4501	00424-01210	WASHER-SEATING HANDLE	2	50	WAGON & VAN					
	02	00424-01212	WASHER-SEATING HANDLE	2	50	WAGON & VAN			Y	N	00424-01210
	4601	00916-41010	WASHER-TOOTH OUTERNAL	2	50	WAGON & VAN					
*	4701	80750-E0101	ASSY-DOOR VENTILATOR REGULATOR RH	1	1	WAGON & VAN					
*	4801	80751-E0101	ASSY-DOOR VENTILATOR REGULATOR LH	1	1	WAGON & VAN					
	02	80751-E0102	ASSY-DOOR VENTILATOR REGULATOR LH	1	1	WAGON & VAN		0969	Y	N	80751-E0101
*	4901	00314-41010	SCREW-MACHINE FIXING DOOR VENT REGULATOR	6	50	WAGON & VAN		0969			
	02	00314-41012	SCREW-MACHINE FIXING DOOR VENT REGULATOR	6	50	WAGON & VAN			Y	N	00314-41010
	5001	00915-11410	WASHER-LOCK SPRING FIXING DOOR VENT REGULATOR	6	50	WAGON & VAN		0969			
	5101	00414-41610	SCREW-MACHINE FIXING DOOR VENT REGULATOR	2	50	WAGON & VAN		0969			
	5201	80700-E0100	ASSY-REGULATOR DOOR WINDOW FRONT RH	1	1	WAGON & VAN					
	5301	80701-E0100	ASSY-REGULATOR DOOR WINDOW FRONT LH	1	1	WAGON & VAN					

NOTE:

© 1972 NISSAN MOTOR CO., LTD.

REVISED: DECEMBER, 1972
PRINTED IN JAPAN

FRONT DOOR LOCK & REGULATOR (W & V)

S	KEY NO.	PART NO.	DESCRIPTION	Q'TY	UNIT PKG FOR DIST.	APPLIED MODEL	APPLIED DATE FROM	APPLIED DATE UP TO	ICA N	ICA F	SUPERSEDED
	54D1	80710-E0100	ASSY-GUIDE DOOR WINDOW REGULATOR	2	5	WAGON & VAN					
	55D1	00314-41214	SCREW-MACHINE	8	50	WAGON & VAN		0969			
	56D1	00915-11410	SPRING-LOCK	4	50	WAGON & VAN	1069				
	57D1	00911-34410	NUT	4	50	WAGON & VAN					
	58D1	00915-41410	WASHER-PLAIN	4	50	WAGON & VAN					
	59D1	82727-E0100	SPRING-RETAINER DOOR WINDOW REGULATOR	2	10	WAGON & VAN					
	60D1	82728-65000	WASHER-DOOR WINDOW REGULATOR ARM	2	10	WAGON & VAN					

NOTE:

© 1972 NISSAN MOTOR CO., LTD.

PRINTED IN JAPAN

NOTE

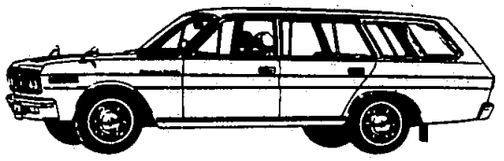

NISSAN MOTOR CO., LTD.

Printed in Japan

NOTE

Printed in Japan

NISSAN MOTOR CO., LTD.

FRONT DOOR TRIMMING (W & V)

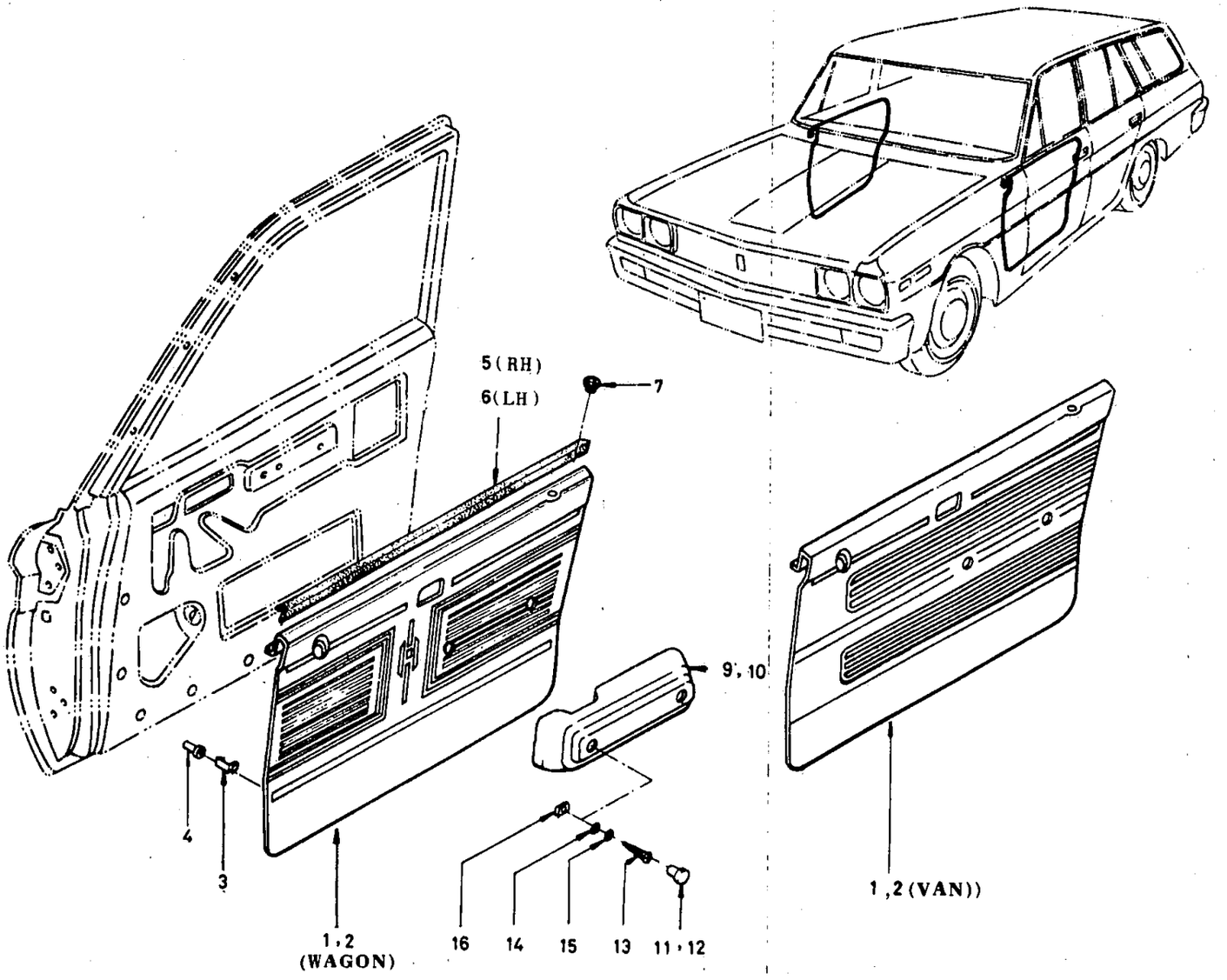

© 1972 NISSAN MOTOR CO., LTD.

REVISED: DECEMBER, 1972

PRINTED IN JAPAN

FRONT DOOR FINISH (W & V '69 YEAR MODEL)

('69 YEAR MODEL)

WAGON

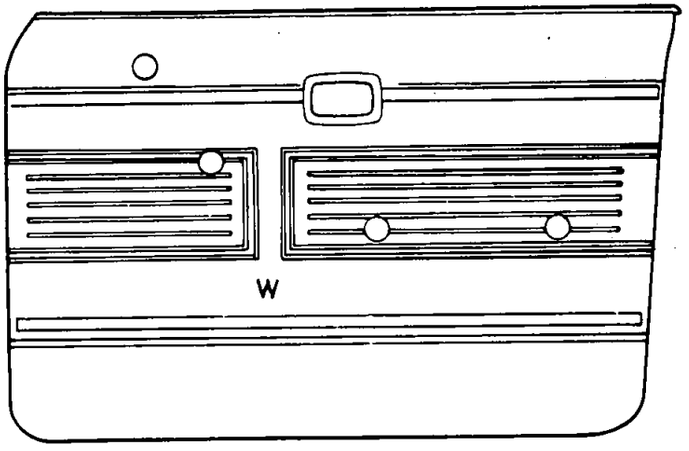

VAN

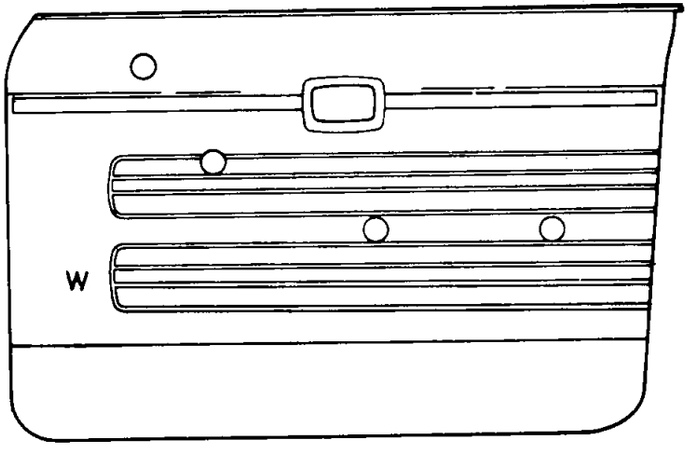

WAGON

KEY NO.	PART NO.	W COLLOR	W COLLOR NO.
1–01 2–01	80900 E0200 80901 E0200	RED	#1373
1–03 2–03	80900 E0201 80901 E0201	BLACK	#1374
1–05 2–05	80900 E0202 80901 E0202	BROWN	#1381
1–07 2–07	80900 E0203 80901 E0203	GRAY	#1375
1–09 2–09	80900 E0204 80901 E0204	BLUE	#1703

VAN

KEY NO.	PART NO.	W COLLOR	W COLLOR NO.
1–13 2–13	80900 E0300 80901 E0300	BROWN	#1381
1–11 2–11	80900 E0301 80901 E0301	BLACK	#1374

© 1972 NISSAN MOTOR CO., LTD.

PRINTED IN JAPAN

FRONT DOOR FINISH (W & V '70 YEAR MODEL)

('70 YEAR MODEL)

WAGON

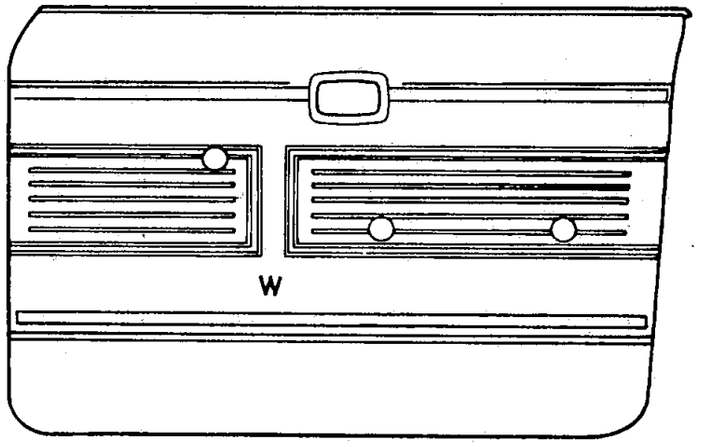

VAN-DELUXE

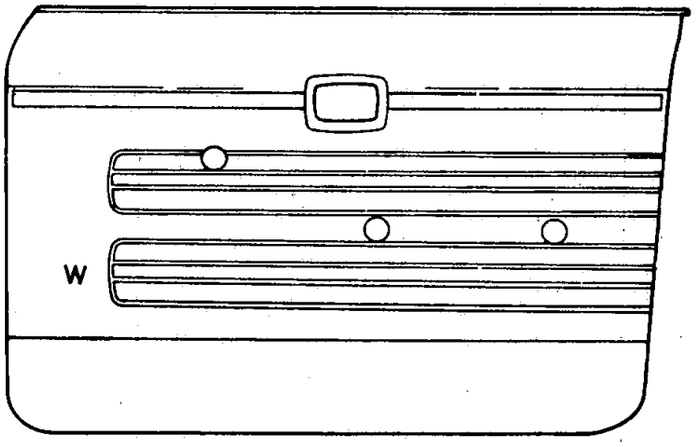

WAGON

KEY NO.	PART NO.	W COLLOR	W COLLOR NO.
1–02 2–02	80900 E3000 80901 E3000	RED	#1373
1–04 2–04	80900 E3001 80901 E3001	BLACK	#1374
1–06 2–06	80900 E3002 80901 E3002	BROWN	#1381
1–08 2–08	80900 E3003 80901 E3003	GRAY	#1375
1–10 2–10	80900 E3004 80901 E3004	BLUE	#1703

VAN–DELUXE

KEY NO.	PART NO.	W COLLOR	W COLLOR NO.
1–14 2–14	80900 E3400 80901 E3400	BROWN	#1381
1–12 2–12	80900 E3401 80901 E3401	BLACK	#1374

© 1972 NISSAN MOTOR CO., LTD.
REVISED: DECEMBER, 1972
PRINTED IN JAPAN

FRONT DOOR TRIMMING (W & V)

S	KEY NO.	PART NO.	DESCRIPTION	QTY	UNIT PKG FOR DIST.	APPLIED MODEL	APPLIED DATE FROM	APPLIED DATE UP TO	ICA N	ICA F	SUPERSEDED
	101	80900-E0200	ASSY-FINISH FRONT DOOR RH #1373	1	1	WAGON		0969			
	02	80900-E3000	ASSY-FINISH FRONT DOOR RH #1373	1	1	WAGON	1069				
	03	80900-E0201	ASSY-FINISH FRONT DOOR RH #1374	1	1	WAGON		0969	Y	Y	80763-E0100
	04	80900-E3001	ASSY-FINISH FRONT DOOR RH #1374	1	1	WAGON	1069				
	05	80900-E0202	ASSY-FINISH FRONT DOOR RH #1381	1	1	WAGON					
	06	80900-E3002	ASSY-FINISH FRONT DOOR RH #1381	1	1	WAGON	1069				
	07	80900-E0203	ASSY-FINISH FRONT DOOR RH #1375	1	1	WAGON		0969			
	08	80900-E3003	ASSY-FINISH FRONT DOOR RH #1375	1	1	WAGON	1069				
	09	80900-E0204	ASSY-FINISH FRONT DOOR RH #1703	1	1	WAGON		0969			
	10	80900-E3004	ASSY-FINISH FRONT DOOR RH #1703	1	1	WAGON	1069				
	11	80900-E0301	ASSY-FINISH FRONT DOOR RH #1374	1	1	VAN		0969			
	12	80900-E3401	ASSY-FINISH FRONT DOOR RH #1374	1	1	VAN-DX	1069				
	13	80900-E0300	ASSY-FINISH FRONT DOOR RH #1381	1	1	VAN		0969			
	14	80900-E3400	ASSY-FINISH FRONT DOOR RH #1381	1	1	VAN-DX	1069				
	201	80901-E0200	ASSY-FINISH FRONT DOOR LH #1373	1	1	WAGON		0969			

NOTE:

© 1972 NISSAN MOTOR CO., LTD.

PRINTED IN JAPAN

FRONT DOOR TRIMMING (W & V)

S	KEY NO.	PART NO.	DESCRIPTION	QTY	UNIT PKG FOR DIST.	APPLIED MODEL	APPLIED DATE FROM	APPLIED DATE UP TO	ICA N	ICA F	SUPERSEDED
	202	80901-E3000	ASSY-FINISH FRONT DOOR LH #1373	1	1	WAGON					
	03	80901-E0201	ASSY-FINISH FRONT DOOR LH #1374	1	1	WAGON		0969			
	04	80901-E3001	ASSY-FINISH FRONT DOOR LH #1374	1	1	WAGON	1069				
	05	80901-E0202	ASSY-FINISH FRONT DOOR LH #1381	1	1	WAGON		0969			
	06	80901-E3002	ASSY-FINISH FRONT DOOR LH #1381	1	1	WAGON		0969			
	07	80901-E0203	ASSY-FINISH FRONT DOOR LH #1375	1	1	WAGON		0969			
	08	80901-E3003	ASSY-FINISH FRONT DOOR LH #1375	1	1	WAGON	1069				
	09	80901-E0204	ASSY-FINISH FRONT DOOR LH #1703	1	1	WAGON		0969			
	10	80901-E3004	ASSY-FINISH FRONT DOOR LH #1703	1	1	WAGON	1069				
	11	80901-E0301	ASSY-FINISH FRONT DOOR LH #1374	1	1	VAN		0969			
	12	80901-E3401	ASSY-FINISH FRONT DOOR LH #1374	1	1	VAN-DX	1069				
	13	80901-E0300	ASSY-FINISH FRONT DOOR LH #1381	1	1	VAN		0969			
	14	80901-E3400	ASSY-FINISH FRONT DOOR LH #1381	1	1	VAN-DX	1069				
	301	80919-32200	CLIP-FINISH DOOR	14	50	WAGON & VAN					
	401	80929-32200	CAP-FINISH DOOR	1	50	WAGON & VAN					
	501	80960-E0102	ASSY-WEATHERSTRIP FRONT DOOR RH	1	1	WAGON & VAN					

NOTE:

© 1972 NISSAN MOTOR CO., LTD.

REVISED: DECEMBER, 1972
PRINTED IN JAPAN

FRONT DOOR TRIMMING (W & V)

S	KEY NO.	PART NO.	DESCRIPTION	QTY	UNIT PKG FOR DIST.	APPLIED MODEL	APPLIED DATE FROM	APPLIED DATE UP TO	ICA N	ICA F	SUPERSEDED
	601	80961-E0102	ASSY-WEATHERSTRIP FRONT DOOR LH	1	1	WAGON & VAN					
	701	80970-E0102	GROMMET-LOCK KNOB	2	5	WAGON & VAN					
	801	77710-89912	SCREW-TAPPING	4	50	WAGON & VAN					
	901	80940-E0100	ASSY-ARMREST FRONT DOOR RH	1	1	WAGON & VAN					
	02	80940-E0110	ASSY-ARMREST FRONT DOOR RH (MITSUBOSHI)	1	1	VAN					
	1001	80941-E0100	ASSY-ARMREST FRONT DOOR LH	1	1	WAGON & VAN					
	02	80941-E0110	ASSY-ARMREST FRONT DOOR LH (MITSUBOSHI)	1	1	VAN					
	1101	80945-E0100	PLUG-HOLE ARMREST	4	10	WAGON & VAN					
	1201	80945-E0110	PLUG-HOLE ARMREST (MITSUBOSHI)	4	10	VAN					
	1301	77710-89912	SCREW-TAPPING	4	50	WAGON & VAN					
	1401	00915-41010	WASHER-PLAIN	4	50	WAGON & VAN					
	1501	00915-11010	WASHER-LOCK SPRING	4	50	WAGON & VAN					
	1601	08963-10510	NUT-SPRING	4	50	WAGON & VAN					

NOTE:

© 1972 NISSAN MOTOR CO., LTD.

PRINTED IN JAPAN

NOTE

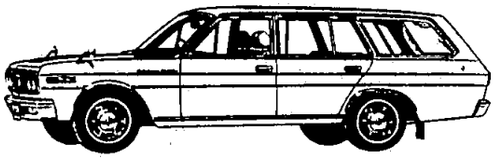

NISSAN MOTOR CO., LTD.

Printed in Japan

NOTE

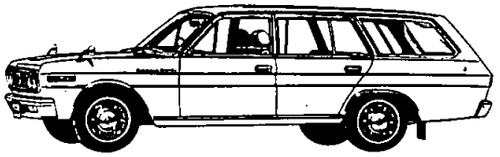

Printed in Japan

NISSAN MOTOR CO., LTD.

REAR DOOR PANEL, GLASS & HINGE (W & V)

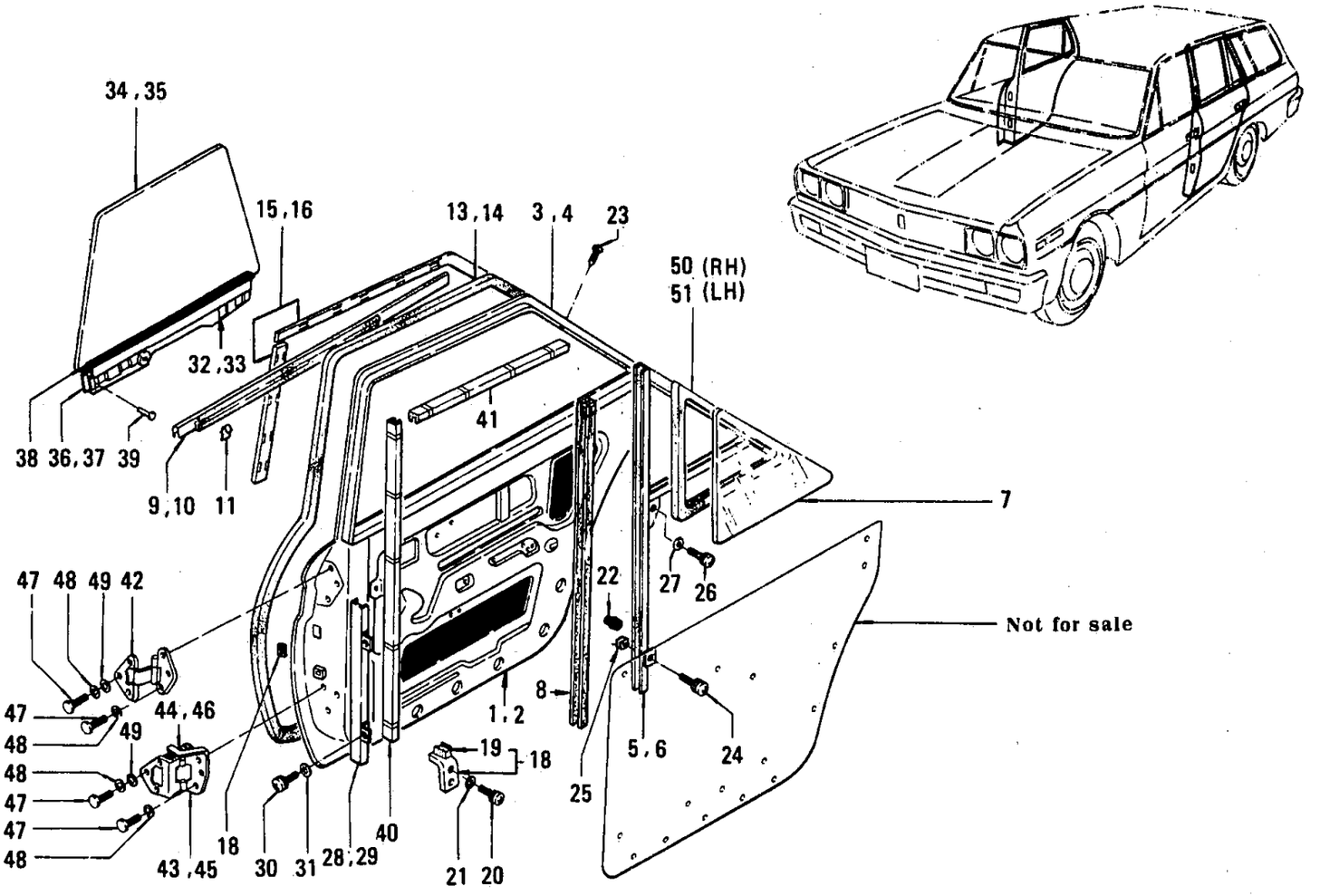

© 1972 NISSAN MOTOR CO., LTD.

REVISED: DECEMBER, 1972

PRINTED IN JAPAN

REAR DOOR PANEL, GLASS & HINGE (W & V)

S	KEY NO.	PART NO.	DESCRIPTION	Q'TY	UNIT PKG FOR DIST.	APPLIED MODEL	APPLIED DATE FROM	APPLIED DATE UP TO	ICA N	ICA F	SUPERSEDED
	101	82100-E0430	ASSY-PANEL REAR DOOR RH	1	1	WAGON & VAN					
	201	82101-E0430	ASSY-PANEL REAR DOOR LH	1	1	WAGON & VAN					
	301	82210-E0400	ASSY-SASH REAR DOOR RH	1	1	WAGON & VAN					
	401	82211-E0400	ASSY-SASH REAR DOOR LH	1	1	WAGON & VAN					
	501	82202-E0400	ASSY-PARTITION REAR DOOR RH	1	1	VAN		0969			
	02	82202-E0500	ASSY-PARTITION REAR DOOR RH	1	1	WAGON & VAN-DX	1069				
	601	82203-E0400	ASSY-PARTITION REAR DOOR LH	1	1	VAN		0969			
	02	82203-E0500	ASSY-PARTITION REAR DOOR LH	1	1	WAGON & VAN-DX	1069				
	701	82255-E0400	GLASS-VENT REAR DOOR RH TEMPERED 5.0T	1	1	VAN		0969			
	02	82255-E0500	GLASS-VENT REAR DOOR RH TINTED & TEMPERED 5.0T	1	1	WAGON & VAN-DX	1069				
	03	82256-E0400	GLASS-VENT REAR DOOR LH TEMPERED 5.0T	1	1	VAN		0969			
	04	82256-E0500	GLASS-VENT REAR DOOR LH TINTED & TEMPERED 5.0T	1	1	WAGON & VAN-DX	1069				
	801	82338-E0400	RUBBER-GLASS RUN H	2	5	WAGON & VAN					
	901	82820-E0100	ASSY-MOULDING RH	1	1	WAGON & VAN					
	1001	82821-E0100	ASSY-MOULDING LH	1	1	WAGON & VAN					
	1101	80825-E0100	CLIP-MOULDING DOOR	10	10	WAGON & VAN					
	1201	80840-21001	COVER-DRAIN HOLE	4	10				Y	Y	80840-21000
	1301	82830-E0400	ASSY-WEATHERSTRIP REAR DOOR RH	1	1	WAGON & VAN					
	1401	82831-E0400	ASSY-WEATHERSTRIP REAR DOOR LH	1	1	WAGON & VAN					
	1501	82280-E0400	SET-COVER SASH REAR DOOR RH	1	1	WAGON & VAN					

NOTE:

© 1972 NISSAN MOTOR CO., LTD.

PRINTED IN JAPAN

REAR DOOR PANEL, GLASS & HINGE (W & V)

S	KEY NO.	PART NO.	DESCRIPTION	Q'TY	UNIT PKG FOR DIST.	APPLIED MODEL	APPLIED DATE FROM	APPLIED DATE UP TO	ICA N	ICA F	SUPERSEDED
	1601	82281-E0400	SET-COVER SASH REAR DOOR LH	1	1	WAGON & VAN					
	1701	76816-73000	GROMMET-RUBBER	2	10	WAGON & VAN					
	1801	80860-E0100	ASSY-GLASS STOPPER	2	1	WAGON & VAN					
*	1901	80317-00800	CUSHION-WINDOW GLASS	2	50	WAGON & VAN					
	02	80317-E0199	CUSHION-WINDOW GLASS	2	5	WAGON & VAN			N	N	80317-00800
	2001	00314-41214	SCREW-WITH SELF LOCK WASHER	8	50	WAGON & VAN					
	2101	00915-41410	WASHER-PLAIN	8	50	WAGON & VAN					
	2201	82865-E0100	RUBBER-BUMPER REAR DOOR	2	10	WAGON & VAN					
	2301	80294-73000	SCREW-TAPPING FIXING PARTITION TO PANEL	6	10	WAGON & VAN					
	2401	00314-41214	SCREW-MACHINE W/WASHER FIXIN G PARTITION TO PANEL	2	50	WAGON & VAN					
	2501	80298-73000	NUT-SPRING RETAINING FIXING PARTITION TO PANEL	2	10	WAGON & VAN					
	2601	00314-44515	SCREW-MACHINE W/WASHER FIXIN G PARTITION TO PANEL	2		WAGON & VAN					
	2701	00915-51410	WASHER-PLAIN FIXING PARTITION TO PANEL	2	50	WAGON & VAN					
	2801	82214-E0100	ASSY-SASH REAR DOOR LOWER RH	1	1	WAGON & VAN					
	2901	82215-E0100	ASSY-SASH REAR DOOR LOWER LH	1	1	WAGON & VAN					
	3001	00314-41214	SCREW-MACHINE W/WASHER FIXING PANELE TO SASH	4	50	WAGON & VAN					
	3101	00915-51410	WASHER-PLAIN FIXING PANELE TO SASH LOWER	4	50	WAGON & VAN					
	3201	82302-E0100	ASSY-CHANNEL REAR DOOR BOTTOM GLASS RH	1	1	WAGON & VAN					
	3301	82303-E0100	ASSY-CHANNEL REAR DOOR BOTTOM GLASS LH	1	1	WAGON & VAN					

NOTE:

© 1972 NISSAN MOTOR CO., LTD.

REVISED: DECEMBER, 1972
PRINTED IN JAPAN

REAR DOOR PANEL, GLASS & HINGE (W & V)

S	KEY NO.	PART NO.	DESCRIPTION	Q'TY	UNIT PKG FOR DIST.	APPLIED MODEL	APPLIED DATE FROM	APPLIED DATE UP TO	ICA N	ICA F	SUPERSEDED
	3401	82311-E0400	GLASS-WINDOW REAR DOOR RH TINTED & TEMPERED 5.0T	1	1	VAN		0969			
	02	82311-E0500	GLASS-WINDOW REAR DOOR RH TEMPERED 5.0T	1	1	WAGON & VAN-DX	1069				
	3501	82312-E0400	GLASS-WINDOW REAR DOOR LH TINTED & TEMPERED	1	1	VAN		0969			
	02	82312-E0500	GLASS-WINDOW REAR DOOR LH TEMPERED 5.0T	1	1	WAGON & VAN-DX	1069				
	3601	82304-E0100	GUIDE-REAR DOOR WINDOW BOTTOM RH	1	5	WAGON & VAN					
	3701	82305-E0100	GUIDE-REAR DOOR WINDOW BOTTON LH	1	5	WAGON & VAN					
	3801	80306-E0100	RUBBER-GLAZING REAR DOOR WINDOW	1	5	WAGON & VAN					
	3901	00660-40810	RIVET	6	50	WAGON & VAN					
	4001	82335-E0400	RUBBER-GLASS RUN E	1	5	WAGON & VAN					
	4101	80337-E0100	RUBBER-GLASS RUN C	1	5	WAGON & VAN					
	4201	82400-73000	ASSY-HINGE REAR DOOR UPPER	2	1	WAGON & VAN					
*	4301	82420-E0100	ASSY-HINGE REAR DOOR LOWER RH	1		WAGON & VAN					
*	02	82420-E3200	ASSY-HINGE REAR DOOR LOWER RH	1	1	WAGON & VAN			Y	Y	82420-E0100
	03	80420-E3200	ASSY-HINGE REAR DOOR LOWER RH	1	1	WAGON & VAN			Y	Y	82420-E3200
	4401	80422-73001	SPRING-HINGE DOOR LOWER	1	5	WAGON & VAN					
*	4501	82421-E0100	ASSY-HINGE REAR DOOR LOWER LH	1		WAGON & VAN					
*	02	82421-E3200	ASSY-HINGE REAR DOOR LOWER LH	1	1	WAGON & VAN			Y	Y	82421-E0100

NOTE:

© 1972 NISSAN MOTOR CO., LTD.

PRINTED IN JAPAN

REAR DOOR PANEL, GLASS & HINGE (W & V)

S	KEY NO	PART NO	DESCRIPTION	Q'TY	UNIT PKG FOR DIST.	APPLIED MODEL	APPLIED DATE FROM	APPLIED DATE UP TO	ICA N	ICA F	SUPERSEDED
	4503	80421-E3200	ASSY-HINGE REAR DOOR LOWER LH	1	1	WAGON & VAN			Y	Y	82421-E3200
	4601	80422-73001	SPRING-HINGE DOOR LOWER	1	5	WAGON & VAN					
	4701	00144-52010	BOLT POINTED HEAD	24	50	WAGON & VAN					
	4801	00915-11510	WASHER-LOCK SPRING	24	50	WAGON & VAN					
	4901	00915-51510	WASHER-PLAIN	12	50	WAGON & VAN					
	5001	H2202-E0401	RUBBER-GLASS RH	1	1	WAGON & VAN					
	5101	H2203-E0401	RUBBER-GLASS LH	1	1	WAGON & VAN					

NOTE:

© 1972 NISSAN MOTOR CO., LTD.

REVISED: DECEMBER, 1972
PRINTED IN JAPAN

NOTE

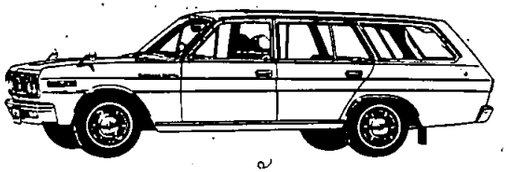

Printed in Japan

NISSAN MOTOR CO., LTD.

REAR DOOR LOCK, WINDOW REGULATOR & DOOR HANDLE (W & V)

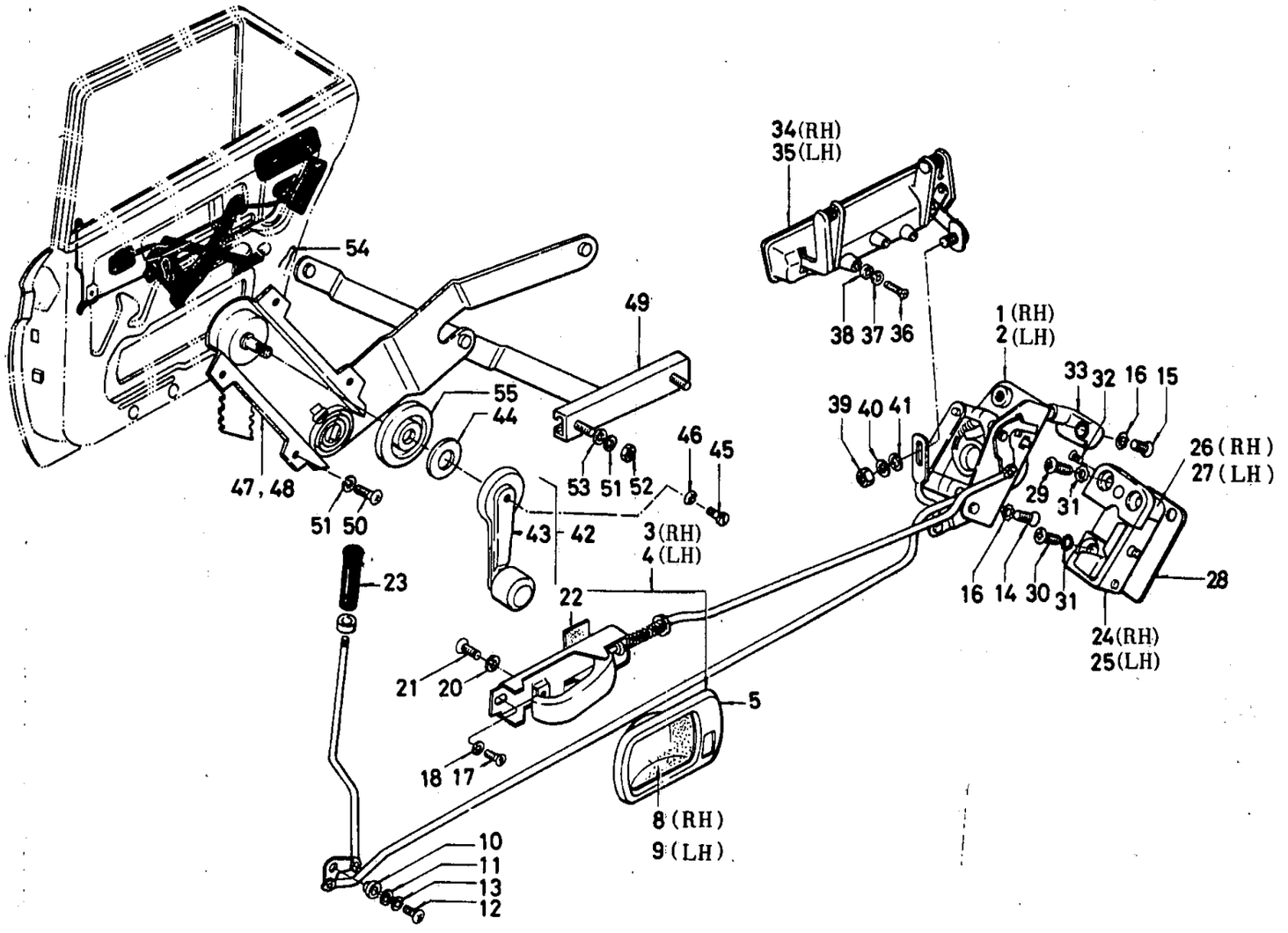

© 1972 NISSAN MOTOR CO., LTD.

REVISED: DECEMBER, 1972

PRINTED IN JAPAN

C

REAR DOOR LOCK, WINDOW REGULATOR & DOOR HANDLE (W & V)

S	KEY NO.	PART NO.	DESCRIPTION	Q'TY	UNIT PKG FOR DIST.	APPLIED MODEL	APPLIED DATE FROM	APPLIED DATE UP TO	ICA N	ICA F	SUPERSEDED
	1D1	82502-E0101	ASSY-LOCK REAR DOOR RH	1	1	WAGON & VAN			Y	Y	82502-E0100
	2D1	82503-E0101	ASSY-LOCK REAR DOOR LH	1	1	WAGON & VAN			Y	Y	82503-E0100
	3D1	80504-E0100	ASSY-REMOTE CONTROL DOOR LOCK RH	1	1	WAGON & VAN					
	4D1	80505-E0100	ASSY-REMOTE CONTROL DOOR LOCK LH	1	1	WAGON & VAN					
	5D1	80599-E0100	COVER-DUST	1	1	WAGON & VAN					
	6D1	80512-E0101	ESCUTCHEON-REMOTE CONTROL RH	1	5	WAGON & VAN					
	D2	80512-E0101	ESCUTCHEON-REMOTE CONTROL RH	1	5	WAGON & VAN			C	N	80512-E0100
	7D1	80513-E0100	ESCUTCHEON-REMOTE CONTROL LH	1	5	WAGON & VAN					
	D2	80513-E0101	ESCUTCHEON-REMOTE CONTROL LH	1	5	WAGON & VAN			C	N	80513-E0100
	8D1	80517-E0100	COVER-REMOTE CONTROL RH	1	5	WAGON & VAN					
	D2	80517-E0101	COVER-REMOTE CONTROL RH	1	5	WAGON & VAN			C	N	80517-E0100
	9D1	80518-E0100	COVER-REMOTE CONTROL LH	1	5	WAGON & VAN					
	D2	80518-E0101	COVER-REMOTE CONTROL LH	1	5	WAGON & VAN			C	N	80518-E0100
	10D1	80515-E0101	COLLAR-BELL CRANK	2	10	WAGON & VAN			Y	Y	80515-E0100
	11D1	08915-53610	WASHER-BELL CRANK	2	50	WAGON & VAN			Y	Y	08516-E0100
	12D1	00314-41610	SCREW-MACHINE	2	50	WAGON & VAN					
	13D1	00915-11410	WASHER-SPRING LOCK	2	50	WAGON & VAN					
	14D1	00324-40810	SCREW-MACHINE FIXNG LOCK TO DOOR	4	50	WAGON & VAN					
	15D1	00324-42012	SCREW-MACHINE FIXING LOCK TO DOOR	4	50	WAGON & VAN					
	16D1	00916-41410	WASHER-TOOTH FIXING LOCK TO DOOR	8	50	WAGON & VAN					

NOTE:

C

PRINTED IN JAPAN

© 1972 NISSAN MOTOR CO., LTD.

REAR DOOR LOCK, WINDOW REGULATOR & DOOR HANDLE (W & V)

S	KEY NO.	PART NO.	DESCRIPTION	Q'TY	UNIT PKG FOR DIST.	APPLIED MODEL	APPLIED DATE FROM	APPLIED DATE UP TO	ICA N	ICA F	SUPERSEDED
*	1701	00414-40810	SCREW-MACHINE FIXING LOCK TO DOOR	4	50	WAGON & VAN					
	02	00414-40812	SCREW-MACHINE FIXING LOCK TO DOOR	4	50	WAGON & VAN			Y	N	00414-40810
	1801	00915-41410	WASHER-PLAIN FIXING LOCK TO DOOR	4	50	WAGON & VAN					
	1901	00915-11410	WASHER-SPRING LOCK FIXING LOCK TO DOOR	4	50	WAGON & VAN					
	2001	00916-40810	WASHER-TOOTH LOCK FIXING COVER TO REMOTE CONT	2	50	WAGON & VAN					
	2101	00420-80810	SCREW-MACHINE FIXING COVER TO REMOTE CONTROL	2		WAGON & VAN					
	2201	80514-E0101	SILENCER-DOOR LOCK LINK	4	10	WAGON & VAN			Y	Y	80514-E0100
	2301	80595-78803	KNOB-DOOR LOCK L=10 CHROME COATING	2	10	WAGON & VAN					
	02	80595-73002	KNOB-DOOR LOCK L=15 CHROME COATING	2	10	WAGON					
	03	80595-78804	KNOB-DOOR LOCK L=15 CHROME COATING	2	10	WAGON DX			C	C	80595-73002
	04	80595-18402	KNOB-DOOR LOCK L=5 CHROME COATING	2	10	WAGON					
*	05	80595-21004	KNOB-DOOR LOCK L=15 BLACK	2	10	VAN					
	06	80595-N1601	KNOB-DOOR LOCK L=15 BLACK	2	5	VAN			Y	N	80595-21004
*	07	80595-21005	KNOB-DOOR LOCK L=5 BLACK	2	10	VAN					
	08	80595-N1602	KNOB-DOOR LOCK L=5 BLACK	2	5	VAN			Y	N	80595-21005
*	09	80595-21003	KNOB-DOOR LOCK L=5 BLACK	2	10	VAN			Y	N	80595-21005
	10	80595-N1600	KNOB-DOOR LOCK L=5 BLACK	2	5	VAN			Y	N	80595-21003
*	2401	80570-E0100	ASSY-STRIKER DOOR LOCK RH	1	1	WAGON & VAN					

NOTE:

© 1972 NISSAN MOTOR CO., LTD.

REVISED: DECEMBER, 1972
PRINTED IN JAPAN
C

REAR DOOR LOCK, WINDOW REGULATOR & DOOR HANDLE (W & V)

S	KEY NO.	PART NO.	DESCRIPTION	Q'TY	UNIT PKG FOR DIST.	APPLIED MODEL	APPLIED DATE FROM	APPLIED DATE UP TO	ICA N	ICA F	SUPERSEDED
	24D2	80570-E0101	ASSY-STRIKER DOOR LOCK RH	1	1	WAGON & VAN			Y	N	80570-E0100
*	25D1	80571-E0100	ASSY-STRIKER DOOR LOCK LH	1	1	WAGON & VAN					
	D2	80571-E0101	ASSY-STRIKER DOOR LOCK LH	1	1	SEDAN			Y	N	80571-E0100
*	26D1	82576-E0100	COVER-STRIKER RH	1	5	WAGON & VAN					
*	D2	82576-E0101	COVER-STRIKER RH	1	5	WAGON & VAN			Y	Y	82576-E0100
	D3	82576-F0800	COVER-STRIKER RH	1	5	WAGON & VAN			Y	N	82576-E0101
*	27D1	82577-E0100	COVER-STRIKER LH	1	5	WAGON & VAN					
*	D2	82577-E0100	COVER-STRIKER LH	1	5	WAGON & VAN			Y	Y	82577-E0101
*	D3	82577-E0101	COVER-STRIKER LH	1	5	WAGON & VAN			Y	N	82577-E0100
	D4	82577-F0800	COVER-STRIKER LH	1	5	WAGON & VAN			Y	N	82577-E0101
	28D1	80575-E0100	SHIM-STRIKER	AR	5	WAGON & VAN					
	29D1	00324-53010	SCREW-MACHINE	8	50	WAGON & VAN					
	30D1	00324-51210	SCREW-MACHINE	4	50	WAGON & VAN					
	31D1	00916-41510	WASHER-TOOTH LOCK	12	50	WAGON & VAN					
*	32D1	08310-30610	SCREW-MACHINE	2	50	WAGON & VAN					
	D2	08310-30612	SCREW-MACHINE	2	50	WAGON & VAN			Y	N	08310-30610
*	D3	80595-21003	KNOB-DOOR LOCK L=10 BLACK	2	10	VAN					
	D4	80595-N1600	KNOB-DOOR LOCK L=10 BLACK	2	5	VAN			Y	N	80595-21003
*	33D1	80572-E0100	GUIDE-STRIKER	2	5	WAGON & VAN					
	D2	80572-E0101	GUIDE-STRIKER	2	10	WAGON & VAN			Y	N	80572-E0100
	34D1	82605-E0100	ASSY-HANDLE REAR DOOR OUTSIDE RH	1	1	WAGON & VAN			Y	Y	82605-E0100
	35D1	82606-E0100	ASSY-HANDLE REAR DOOR OUTSIDE LH	1	1	WAGON & VAN			Y	Y	82606-E0100

NOTE:

© 1972 NISSAN MOTOR CO., LTD.

PRINTED IN JAPAN

REAR DOOR LOCK, WINDOW REGULATOR & DOOR HANDLE (W & V)

S	KEY NO.	PART NO.	DESCRIPTION	Q'TY	UNIT PKG FOR DIST.	APPLIED MODEL	APPLIED DATE FROM	APPLIED DATE UP TO	ICA N	ICA F	SUPERSEDED
	3601	00314-01214	SCREW-MACHINE	6	50	WAGON & VAN					
	3701	00915-11010	WASHER-SPRING LOCK	6	50	WAGON & VAN					
	3801	00915-41010	WASHER-PLAIN	6	50	WAGON & VAN					
	3901	00911-14010	NUT	2	50	WAGON & VAN					
	4001	00915-11010	WASHER-SPRING LOCK	2	50	WAGON & VAN					
	4101	00915-41010	WASHER-PLAIN	2	50	WAGON & VAN					
	4201	80760-E0100	ASSY-HANDLE DOOR WINDOW REGULATOR	2	1	WAGON & VAN					
	4301	80764-E0100	COVER-HANDLE DOOR WINDOW REGULATOR	2	10	WAGON & VAN					
	4401	80763-E0101	WASHER-SEATION HANDLE	2	10	WAGON & VAN					
*	4501	00424-01210	SCREW-MACHINE	2	50	WAGON & VAN					
	D2	00424-01212	SCREW-MACHINE	2	50	WAGON & VAN			Y	N	00424-01210
	4601	00916-41010	WASHER-TOOTH LOCK	2	50	WAGON & VAN					
	4701	82700-E0110	ASSY-REGULATOR DOOR WINDOW REAR RH	1	1	WAGON & VAN					
	4801	82701-E0110	ASSY-REGULATOR DOOR WINDOW REAR LH	1	1	WAGON & VAN					
	4901	80710-E0100	ASSY-GUIDE DOOR WINDOW REGULATOR	2	5	WAGON & VAN					
	5001	00314-41214	SCREW-MACHINE	8	50	WAGON & VAN		0969			
	5101	00915-11410	WASHER-SPRING LOCK	4	50	WAGON & VAN	1069				
	5201	00911-14410	NUT	4	50	WAGON & VAN					
	5301	00915-41410	WASHER-PLAIN	4	50	WAGON & VAN	1069				
	5401	82727-E0100	SPRING-RETAINER DOOR WINDOW REGULATOR ARM	2	10	WAGON & VAN					

NOTE:

© 1972 NISSAN MOTOR CO., LTD.

REVISED: DECEMBER, 1972
PRINTED IN JAPAN
C

REAR DOOR LOCK, WINDOW REGULATOR & DOOR HANDLE (W & V)

S	KEY NO.	PART NO.	DESCRIPTION	Q'TY	UNIT PKG FOR DIST.	APPLIED MODEL	APPLIED DATE FROM	APPLIED DATE UP TO	ICA N	ICA F	SUPERSEDED
	55D1	82728-65000	WASHER-DOOR WINDOW REGULATOR ARM	2	10	WAGON & VAN					
	56D1	80798-E0111	ASSY-WORM WHEEL	1	1	WAGON & VAN					

NOTE:

© 1972 NISSAN MOTOR CO., LTD.

PRINTED IN JAPAN

NOTE

NISSAN MOTOR CO., LTD.

Printed in Japan

NOTE

Printed in Japan

NISSAN MOTOR CO., LTD.

REAR DOOR TRIMMING (W & V)

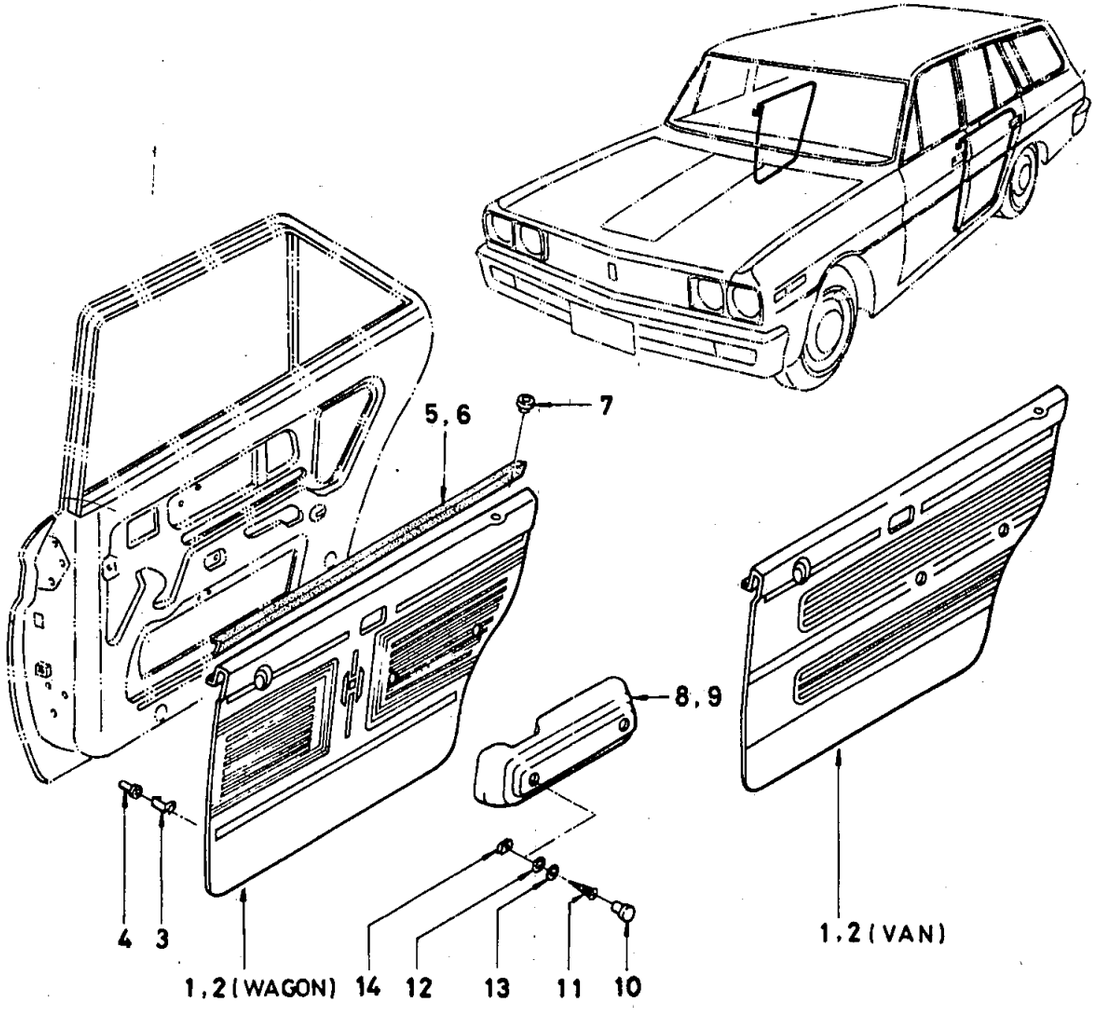

ILLUSTRATION **261-1**

© 1972 NISSAN MOTOR CO., LTD.

REVISED: DECEMBER, 1972

PRINTED IN JAPAN

C

REAR DOOR FINISH (W & V)

WAGON

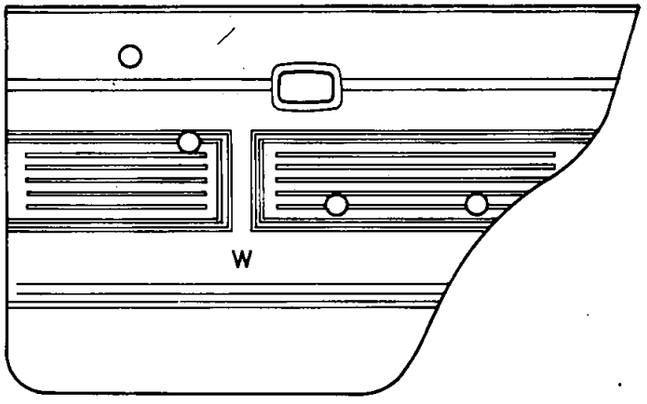

VAN

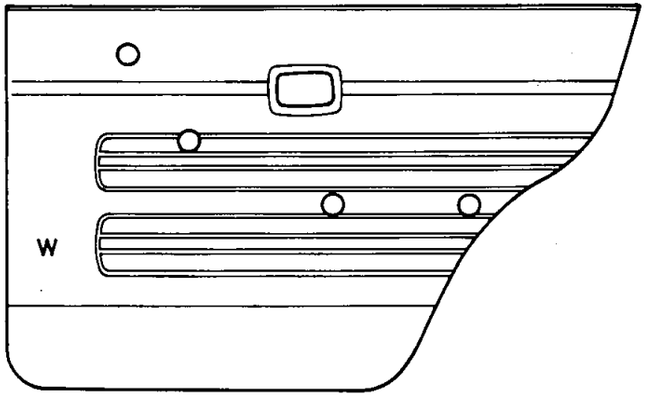

WAGON

KEY NO.	PART NO.	W COLLOR	W COLLOR NO.
1-01 2-01	82900 E0200 82901 E0200	RED	#1373
1-02 2-02	82900 E0201 82901 E0201	BLACK	#1374
1-03 2-03	82900 E0202 82901 E0202	BROWN	#1381
1-04 2-04	82900 E0203 82901 E0203	GRAY	#1375
1-05 2-05	82900 E0204 82900 E0204	BLUE	#1703

VAN

KEY NO.	PART NO.	W COLLOR	W COLLOR NO.
1-06 2-06	82900 E0300 82901 E0300	BROWN	#1381
1-07 2-07	82900 E0301 82901 E0301	BLACK	#1374

PRINTED IN JAPAN

REVISED: DECEMBER, 1972

© 1972 NISSAN MOTOR CO., LTD.

REAR DOOR TRIMMING (W & V)

S	KEY NO.	PART NO.	DESCRIPTION	QTY	UNIT PKG FOR DIST.	APPLIED MODEL	APPLIED DATE FROM	APPLIED DATE UP TO	ICA N	ICA F	SUPERSEDED
	101	- 82900-E0200	ASSY-FINISH REAR DOOR RH	1	1	WAGON					
	02	- 82900-E0201	ASSY-FINISH REAR DOOR RH	1	1	WAGON					
	03	- 82900-E0202	ASSY-FINISH REAR DOOR RH	1	1	WAGON					
	04	- 82900-E0203	ASSY-FINISH REAR DOOR RH	1	1	WAGON					
	05	- 82900-E0204	ASSY-FINISH REAR DOOR RH	1	1	WAGON					
	06	- 82900-E0300	ASSY-FINISH REAR DOOR RH	1	1	VAN VAN-DX					
	07	- 82900-E0301	ASSY-FINISH REAR DOOR RH	1	1	VAN VAN-DX					
	201	- 82901-E0200	ASSY-FINISH REAR DOOR LH	1	1	WAGON					
	02	- 82901-E0201	ASSY-FINISH REAR DOOR LH	1	1	WAGON					
	03	- 82901-E0202	ASSY-FINISH REAR DOOR LH	1	1	WAGON					
	04	- 82901-E0203	ASSY-FINISH REAR DOOR LH	1	1	WAGON					
	05	- 82901-E0204	ASSY-FINISH REAR DOOR LH	1	1	WAGON					
	06	- 82901-E0300	ASSY-FINISH REAR DOOR LH	1	1	VAN VAN-DX					
	07	- 82901-E0301	ASSY-FINISH REAR DOOR LH	1	1	VAN VAN-DX					
	301	- 80919-32200	CLIP-FINISH DOOR	10	50	WAGON & VAN					
	401	- 80929-32200	CAP-FINISH DOOR	10	50	WAGON & VAN					
	501	- 82960-E0102	ASSY-WEATHERSTRIP REAR DOOR RH	1	1	WAGON & VAN					
	601	- 82961-E0102	ASSY-WEATHERSTRIP REAR DOOR LH	1	1	WAGON & VAN					
	701	- 80970-E0102	GROMMET-LOCK KNOB	2	5	WAGON		0969	Y	Y	80970-E0101
	02	- 80970-69000	GROMMET-LOCK KNOB	2	10	WAGON	1069				
	801	- 82940-E0100	ASSY-ARMREST REAR DOOR RH	1	1	WAGON & VAN					
	901	- 82941-E0100	ASSY-ARMREST REAR DOOR LH	1	1	WAGON & VAN					

NOTE:

© 1972 NISSAN MOTOR CO., LTD.

REVISED: DECEMBER, 1972

PRINTED IN JAPAN

REAR DOOR TRIMMING (W & V)

S	KEY NO.	PART NO.	DESCRIPTION	QTY	UNIT PKG FOR DIST.	APPLIED MODEL	APPLIED DATE FROM	APPLIED DATE UP TO	ICA N	ICA F	SUPERSEDED
	1001	80945-E0100	PLUG-HOLE ARMREST	4	10	WAGON & VAN					
	1101	77710-89912	SCREW-TAPPING #10X45	4	50	WAGON & VAN					
	1201	00915-41010	WASHER-PLAIN #10	4	50	WAGON & VAN					
	1301	00915-11010	WASHER-SPRING LOCK #10	4	50	WAGON & VAN					
	1401	08963-10510	NUT-SPRING TYPE A	4	50	WAGON & VAN					

NOTE:

© 1972 NISSAN MOTOR CO., LTD.

PRINTED IN JAPAN

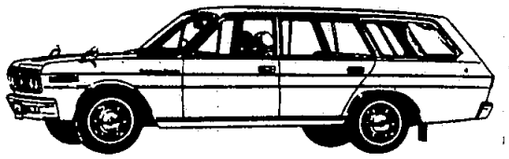

NOTE

NISSAN MOTOR CO., LTD.

Printed in Japan

NOTE

Printed in Japan

NISSAN MOTOR CO., LTD.

SIDE WINDOW (W & V RH)

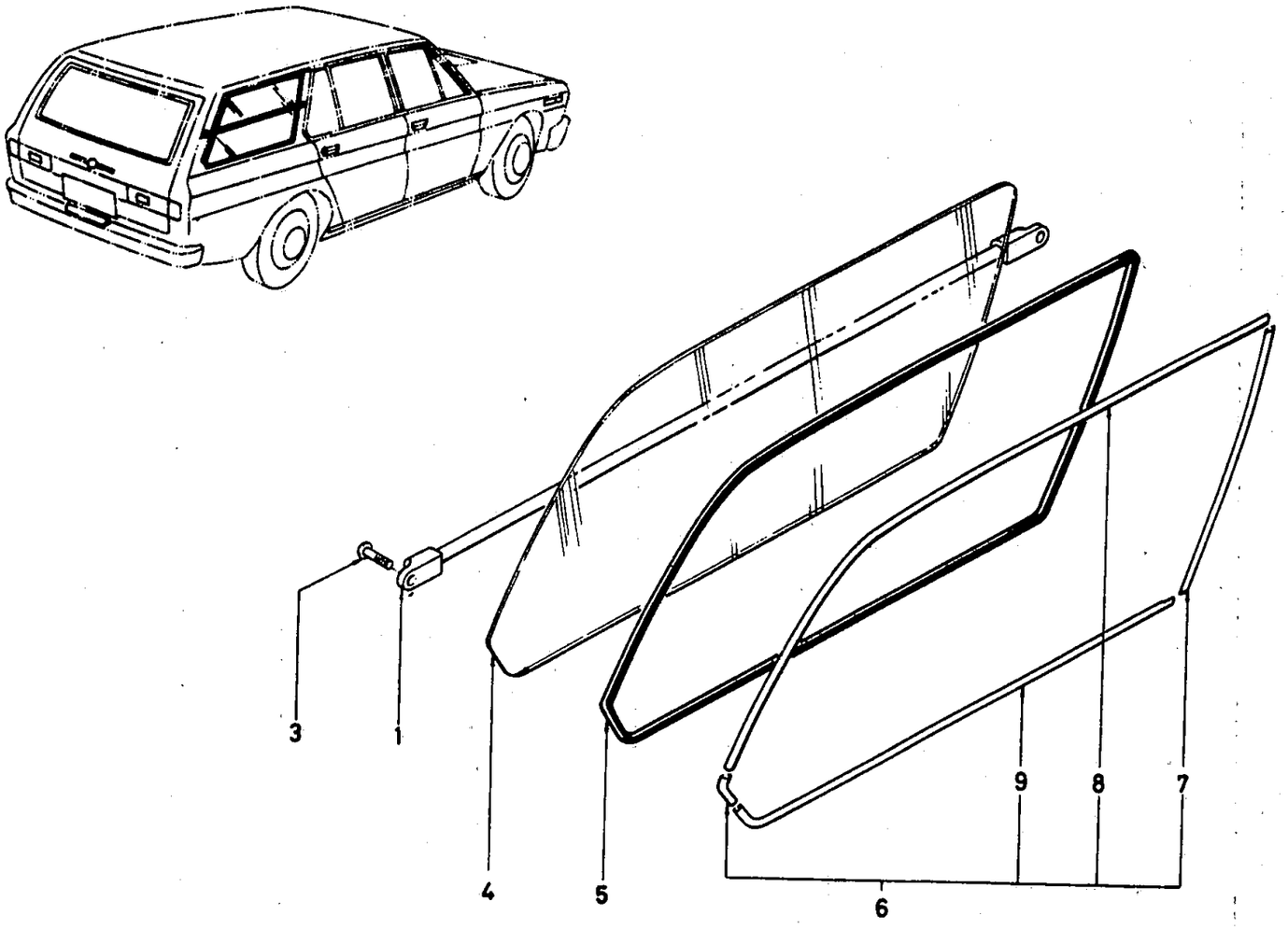

ILLUSTRATION **262** -1

© 1972 NISSAN MOTOR CO., LTD.

REVISED: DECEMBER, 1972

PRINTED IN JAPAN

SIDE WINDOW (W & V LH)

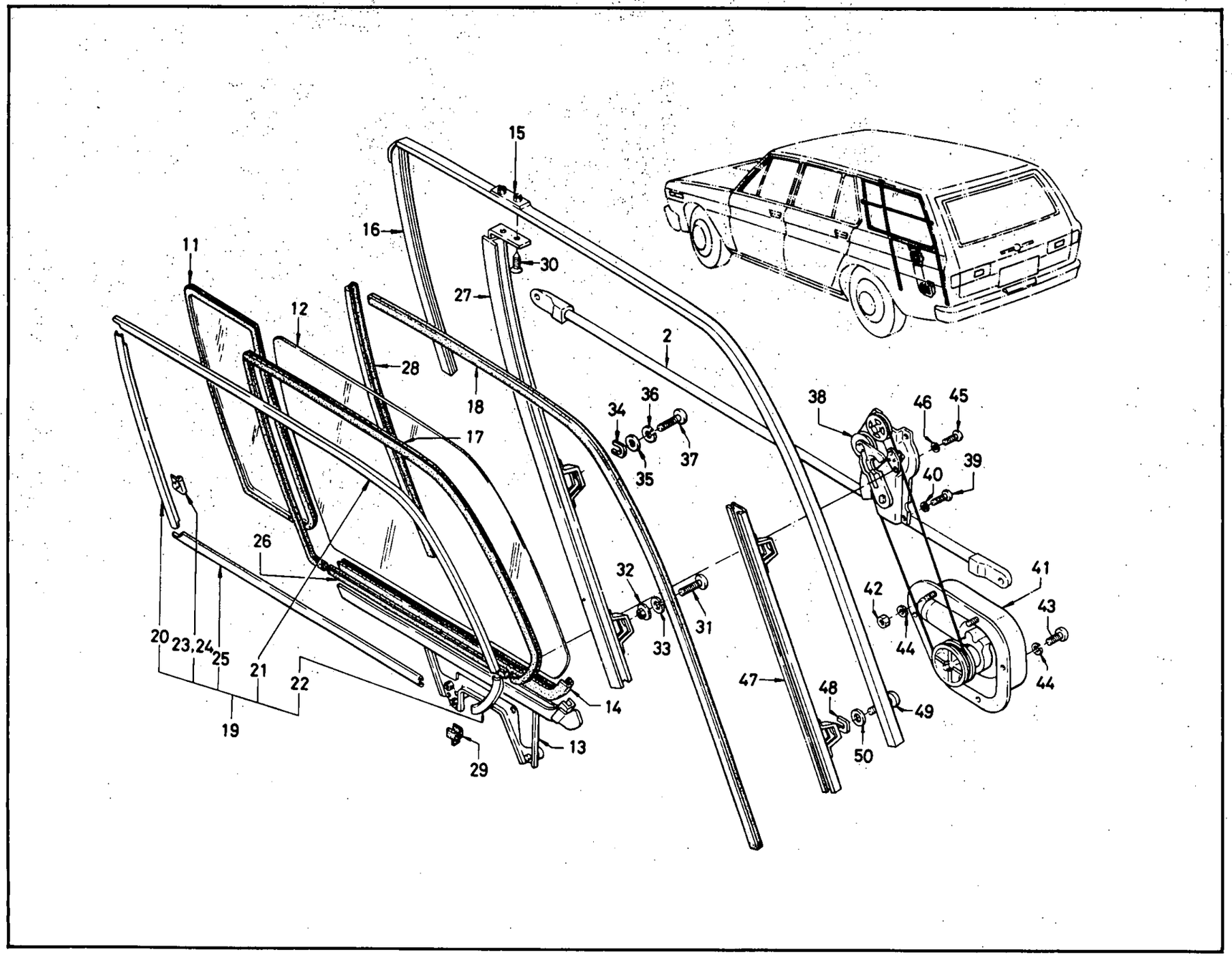

© 1972 NISSAN MOTOR CO., LTD.

PRINTED IN JAPAN

SIDE WINDOW (W & V)

S	KEY NO.	PART NO.	DESCRIPTION	QTY	UNIT PKG FOR DIST.	APPLIED MODEL	APPLIED DATE FROM	APPLIED DATE UP TO	ICA N	ICA F	SUPERSEDED
	101	76836-E0400	ASSY-GUARD BAR RH	1	1	VAN					
	201	76837-E0400	ASSY-GUARD BAR LH	1	1	VAN					
	301	00334-01620	SCREW-MACHINE	4	50	VAN					
	401	76833-E0500	GLASS-SIDE WINDOW RH TINTED & TEMPERED 5.0T	1	1	WAGON					
	02	76833-E1400	GLASS-SIDE WINDOW RH TEMPERED 5.0T	1	1	VAN					
	501	76831-E0400	WETHERSTRIP-SIDE WINDOW RH	1	1	WAGON & VAN					
	601	76870-E0400	SET-MOULDING SIDE WINDOW RH	1	1	WAGON & VAN					
	701	76872-E0400	MOULDING-SIDE WINDOW FRONT RH	1		WAGON & VAN					
	801	76874-E0400	MOULDING-SIDE WINDOW UPPER RH	1	5	WAGON & VAN					
	901	76876-E0400	MOULDING-SIDE WINDOW LOWER RH	1	1	WAGON & VAN					
	1001	76878-E0400	MOULDING-SIDE WINDOW CORNER RH	1	5	WAGON & VAN					
	1101	76834-E0500	GLASS-SIDE WINDOW FRONT LH TINTED & TEMPERED 5.0T	1	1	WAGON					
	02	76834-E0400	GLASS-SIDE WINDOW FRONT LH	1	1	WAGON & VAN RD					
	03	76834-E1400	GLASS-SIDE WINDOW FRONT LH TEMPERED 5.0T	1	1	VAN					
	1201	76835-E0400	GLASS-SIDE WINDOW REAR LH TINTED & TEMPERED 5.0T	1	1	WAGON					
	02	76835-E0500	GLASS-SIDE WINDOW REAR LH TEMPERED 5.0T	1	1	VAN					
	1301	76821-E0400	ASSY-CHANNEL GLASS BOTTOM SIDE WINDOW LH	1	1	WAGON & VAN					

NOTE:

© 1972 NISSAN MOTOR CO., LTD.

REVISED: DECEMBER, 1972
PRINTED IN JAPAN

SIDE WINDOW (W & V)

S	KEY NO.	PART NO.	DESCRIPTION	QTY	UNIT PKG FOR DIST.	APPLIED MODEL	APPLIED DATE FROM	APPLIED DATE UP TO	ICA N	ICA F	SUPERSEDED
	1401	76822-E0400	RUBBER-GLAZING SIDE WINDOW	1	5	WAGON & VAN					
	1501	76326-E0400	ASSY-SASH SIDE WINDOW LH	1	1	WAGON & VAN					
	1601	76626-E0400	SASH-SIDE WINDOW FRONT	1	1	WAGON & VAN					
	1701	76832-E0400	WEATHERSTRIP-SIDE WINDOW LH	1	1	WAGON & VAN					
	1801	76888-E0400	RUBBER-GLASS RUN SIDE WINDOW	1	5	WAGON & VAN					
	1901	76871-E0400	SET-MOULDING SIDE WINDOW LH	1	1	WAGON & VAN					
	2001	76873-E0400	MOULDING-SIDE WINDOW FRONT LH	1		WAGON & VAN					
	2101	76875-E0400	MOULDING-SIDE WINDOW UPPER LH	1	1	WAGON & VAN					
	2201	76879-E0400	MOULDING-SIDE WINDOW CORNER LH	1	5	W & V					
	2301	76883-E0400	CLIP-MOULDING UPPER LH	9	10	WAGON & VAN					
	2401	76884-E0400	CLIP-MOULDING LOWER LH	9	10	WAGON & VAN					
	2501	76880-E0400	ASSY-MOULDING SIDE WINDOW LH	1	1	WAGON & VAN					
	2601	76887-E0400	WEATHERSTRIP-SIDE WINDOW LOWER LH	1	5	WAGON & VAN					
	2701	76810-E0400	ASSY-PARTITION SIDE WINDOW LH	1	1	WAGON & VAN					
	2801	76817-E0400	RUBBER-GLASS RUN PARTITION SIDE WINDOW	1	5	WAGON & VAN					
	2901	76827-E0400	CUSHION-GLASS SIDE WINDOW	2	5	WAGON & VAN					
	3001	00424-41610	SCREW-FIXING PARTITION TO RAIL	2		WAGON & VAN					
	3101	00314-44015	SCREW-FIXING PARTITION TO RAIL	1		WAGON & VAN					
	3201	80298-73000	NUT-SPECIAL	1	10	WAGON & VAN					

NOTE:

© 1972 NISSAN MOTOR CO., LTD.

PRINTED IN JAPAN

SIDE WINDOW (W & V)

S	KEY NO.	PART NO.	DESCRIPTION	QTY	UNIT PKG FOR DIST.	APPLIED MODEL	APPLIED DATE FROM	APPLIED DATE UP TO	ICA N	ICA F	SUPERSEDED
	3301	00915-11410	WASHER-LOCK	1	50	WAGON & VAN					
	3401	77740-89915	SHIM-ADJUST	1	10	WAGON & VAN					
	3501	00915-51410	WASHER-PLAIN	1	50	WAGON & VAN					
	3601	00915-11410	WASHER-LOCK	1	50	WAGON & VAN					
	3701	00314-41610	SCREW	1	50	WAGON & VAN					
	3801	82755-E0400	ASSY-PULLEY TENSION SIDE WINDOW	1	1	WAGON & VAN					
•	3901	00314-40810	SCREW	4	50	WAGON & VAN		0969			
	02	00314-40812	SCREW	1	10	WAGON & VAN			Y	N	00314-40810
	03	00314-41214	SCREW-MACHINE WITH LOCK WASHER	4	50	WAGON & VAN	1069				
	4001	00915-11410	WASHER-LOCK	4	50	WAGON & VAN		0969			
	4101	82750-E0400	ASSY-MOTOR SIDE WINDOW	1	1	WAGON & VAN					
	4201	00911-14410	NUT-HEX FIXING MOTOR	2	50	WAGON & VAN					
•	4301	00314-40810	SCREW-FIXING MOTOR	4	50	WAGON & VAN					
	02	00314-40812	SCREW-FIXING MOTOR	4	10	WAGON & VAN			Y	N	00314-40810
	4401	00915-11410	WASHER-LOCK FIXING MOTOR	6	50	WAGON & VAN					
	4501	00114-41210	BOLT-HEX FIXING GLASS HOLDER	2	50	WAGON & VAN		0969			
	02	00314-41214	BOLT-HEX FIXING GLASS HOLDER	2	50	WAGON & VAN	1069				
	4601	00915-11410	WASHER-LOCK FIXING GLASS HOLDER	2	50	WAGON & VAN		0969			
	4701	82760-E0400	ASSY-CHANNEL GUIDE SIDE WINDOW	1	1	WAGON & VAN					
	4801	77740-89915	SHIM-ADJUST	AR	10	WAGON & VAN					
	4901	00314-41614	SCREW	2	50	WAGON & VAN					

NOTE:

© 1972 NISSAN MOTOR CO., LTD.

REVISED: DECEMBER, 1972
PRINTED IN JAPAN

SIDE WINDOW (W & V)

S	KEY NO.	PART NO.	DESCRIPTION	QTY	UNIT PKG FOR DIST.	APPLIED MODEL	APPLIED DATE FROM	APPLIED DATE UP TO	ICA N	ICA F	SUPERSEDED
	5001	00915-51410	WASHER-PLAIN	2	50	WAGON & VAN					

NOTE:

© 1972 NISSAN MOTOR CO., LTD.

PRINTED IN JAPAN

NOTE

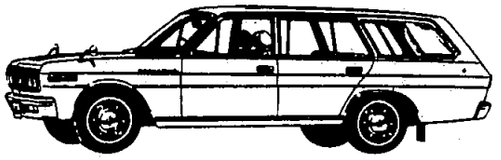

NISSAN MOTOR CO., LTD.

Printed in Japan

NOTE

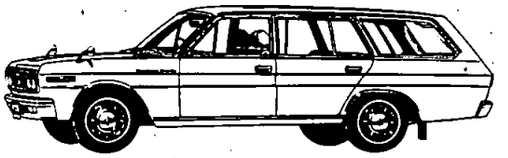

Printed in Japan

NISSAN MOTOR CO., LTD.

TAIL GATE PANEL, TRIM, LOCK & REAR BUMPER (W & V)

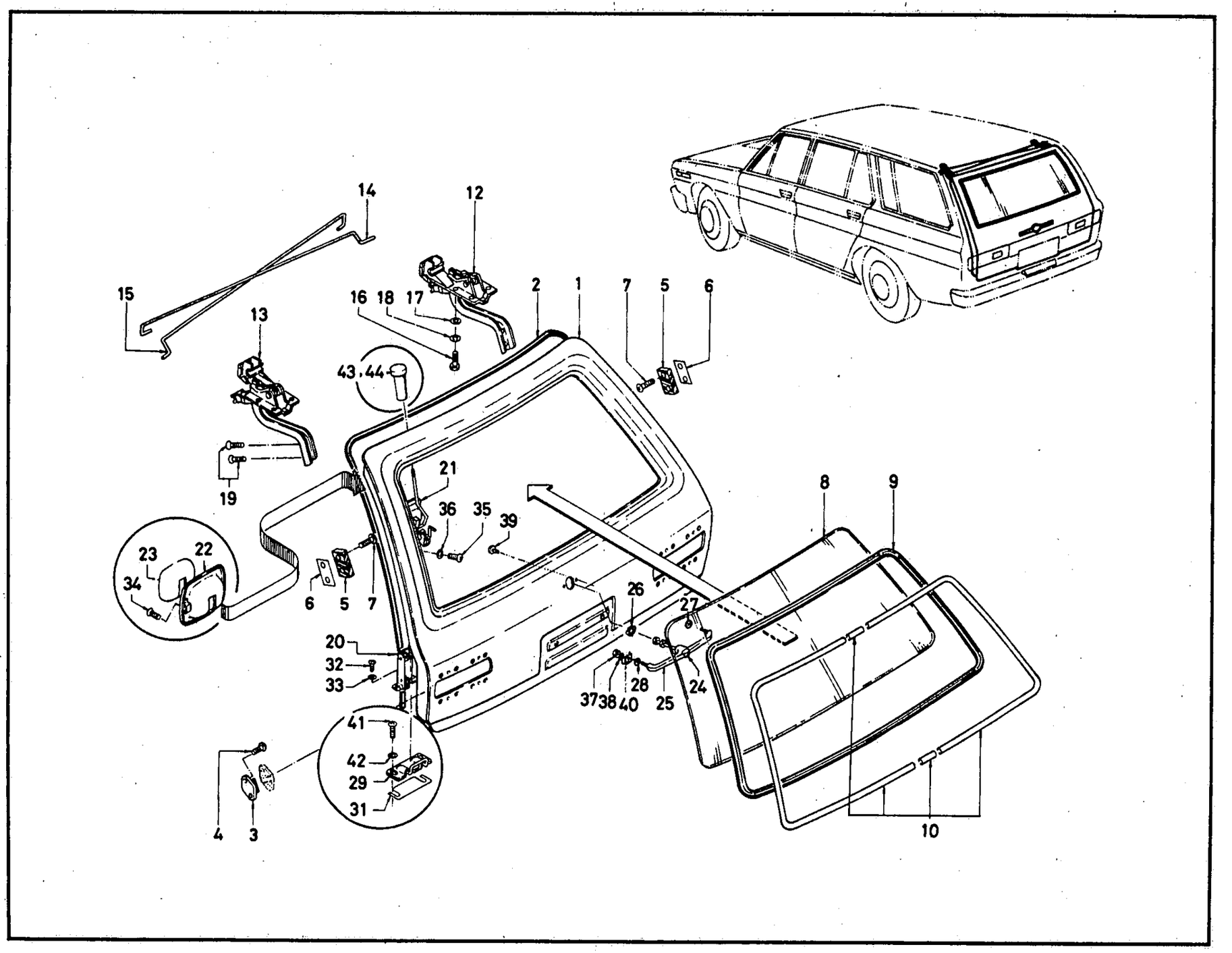

© 1972 NISSAN MOTOR CO., LTD.

REVISED: DECEMBER, 1972

PRINTED IN JAPAN

TAIL GATE PANEL, TRIM, LOCK & REAR BUMPER (W & V)

S	KEY NO.	PART NO.	DESCRIPTION	Q'TY	UNIT PKG FOR DIST.	APPLIED MODEL	APPLIED DATE FROM	APPLIED DATE UP TO	ICA N	ICA F	SUPERSEDED
	101	90100-E0431	ASSY-PANEL TAIL GATE	1	1	WAGON & VAN					
	201	90210-E0400	WEATHERSTRIP-TAIL GATE OPENING	1	1	WAGON & VAN					
	301	90580-68400	ASSY-STRIKER TAIL GATE	2	1	WAGON & VAN					
	401	00314-51619	SCREW-MACHINE	4		WAGON & VAN					
	501	90526-22900	BUMPER-RUBBER TAIL GATE	2	5	WAGON & VAN					
	601	90816-E0402	SPACER-BUMPER RUBBER	2	10	WAGON & VAN					
	701	00314-01018	SCREW-MACHINE	4	50	WAGON & VAN					
	801	90313-E0500	GLASS-TAIL GATE WINDOW	1	1	WAGON					
	02	90313-E1400	GLASS-TAIL GATE WINDOW TEMPERED 5.0†	1	1	VAN					
	901	90320-E0400	WEATHERSTRIP-T/G WINDOW TAIL GATE	1	1	WAGON & VAN					
	1001	90330-E0400	SET-MOULDING T/G WINDOW TAIL GATE	1	1	WAGON & VAN					
	1101	90333-E0400	CLIP-MOULDING T/G WINDOW TAIL GATE	2	10	WAGON & VAN					
	1201	90410-E0400	ASSY-TAIL GATE HINGE RH	1	1	WAGON & VAN					
	1301	90411-E0400	ASSY-TAIL GATE HINGE LH	1	1	WAGON & VAN					
	1401	90420-E0401	TORSION BAR-TAIL GATE HINGE RH	1	1	WAGON & VAN					
	1501	90421-E0401	TORSION BAR-TAIL GATE HINGE LH	1	1	WAGON & VAN					
	1601	00114-52510	BOLT-HEX FIXING HINGE TO BODY	8	50	WAGON & VAN					
	1701	00915-51510	WASHER-PLAIN FIXING HINGE TO BODY	8	50	WAGON & VAN					

NOTE:

© 1972 NISSAN MOTOR CO., LTD.

PRINTED IN JAPAN

TAIL GATE PANEL, TRIM, LOCK & REAR BUMPER (W & V)

S	KEY NO.	PART NO.	DESCRIPTION	Q'TY	UNIT PKG FOR DIST.	APPLIED MODEL	APPLIED DATE FROM	APPLIED DATE UP TO	ICA N	ICA F	SUPERSEDED
	1801	00915-21510	WASHER-SPRING FIXING HINGE TO BODY	8	50	WAGON & VAN					
	1901	00915-21510	SCREW-MACHINE FIXING HINGE TO GATE	4	50	WAGON & VAN					
	2001	90502-E0401	ASSY-LOCK TAIL GATE	1	1	WAGON & VAN					
	02	90502-E0402	ASSY-LOCK TAIL GATE	1	1	WAGON & VAN			C	N	90502-E0401
	2101	90505-E0400	ASSY-REMOTE CONTROL TAIL GATE LOCK	1	1	WAGON & VAN					
	02	90504-E0500	ASSY-REMOTE CONTROL TAIL GATE LOCK	1	1	WAGON & VAN					
	2201	90512-E0400	ESCUTCHEON-REMOTE CONTROL TAIL GATE LOCK	1	1	WAGON & VAN					
	2301	90515-E0400	COVER-ESCUTCHEON	1	5	WAGON & VAN					
	2401	90600-E0400	LOCK-CYLINDER TAIL GATE HANDLEASSY	1	1	WAGON & VAN					
	2501	90601-E0400	HANDLE-TAIL GATE	1	1	WAGON & VAN					
	2601	90602-E0400	WASHER-TAIL GATE HANDLE A	1	10	WAGON & VAN					
	2701	90603-E0400	WASHER-TAIL GATE HANDLE B	1	10	WAGON & VAN					
	2801	90604-E0400	WASHER-TAIL GATE HANDLE C	1	10	WAGON & VAN					
	2901	90570-E0400	STRIKER-TAIL GATE LOCK ASSY	1	1	WAGON & VAN					
	02	90570-E0400	ASSY-STRIKER TAIL GATE LOCK W/LOCKT/GATE	1	1	WAGON & VAN			C	N	90570-E0400
	3001	90573-E0400	PLATE-FRICTION T/G LOCK STRIKER ASSY	AR	10	WAGON & VAN					
	3101	90575-E0400	SHIM-ADJUSTING T/G LOCK STRIKER	AR	5	WAGON & VAN					
	3201	00314-41214	SCREW-MACHINE	4	50	WAGON & VAN					

NOTE:

C

PRINTED IN JAPAN

© 1972 NISSAN MOTOR CO., LTD.

REVISED: DECEMBER, 1972

TAIL GATE PANEL, TRIM, LOCK & REAR BUMPER (W & V)

S	KEY NO.	PART NO.	DESCRIPTION	Q'TY	UNIT PKG FOR DIST.	APPLIED MODEL	APPLIED DATE FROM	APPLIED DATE UP TO	ICA N	ICA F	SUPERSEDED
	33D1	00915-41410	WASHER-PLAIN	4	50	WAGON & VAN					
*	34D1	00521-02210	SCREW-MACHINE FIXING ESCUTCHEON	2	50	WAGON & VAN					
	D2	00521-02212	SCREW-MACHINE FIXING ESCUTCHEON	2	50	WAGON & VAN			Y	N	00521-02210
	35D1	00314-41214	SCREW-MACHINE FIXING REMOTE CONTROL	2	50	WAGON & VAN					
	36D1	00915-41410	WASHER-PLAIN FIXING REMOTE CONTROL	2	50	WAGON & VAN					
	37D1	00911-24410	NUT-FIXING HANDLE	2	50	WAGON & VAN					
	38D1	00915-11410	WASHER-LOCK FIXING HANDLE	2	50	WAGON & VAN					
	39D1	00314-41214	SCREW-MACHINE FIXING HANDLE	2	50	WAGON & VAN					
	40D1	90610-E0401	WASHER-SPECIAL FIXING HANDLE	2	5	WAGON & VAN					
	41D1	00314-52014	SCREW-MACHINE FIXING STRIKER	2	50	WAGON & VAN					
	42D1	00915-41510	WASHER-PLAIN FIXING STRIKER	2	50	WAGON & VAN					
	43D1	80595-73001	KNOB-DOOR LOCK	1	10	WAGON					
	D2	80595-78803	KNOB-DOOR LOCK	2	10	WAGON & VAN DX			C	C	80595-73001
	D3	80595-73002	KNOB-DOOR LOCK	1	10	WAGON					
	D4	80595-78804	KNOB-DOOR LOCK	2	10	WAGON & VAN DX			C	C	80595-73002
	D5	80595-73003	KNOB-DOOR LOCK	1	10	WAGON					
	D6	80595-78805	KNOB-DOOR LOCK	2	10	WAGON & VAN DX			C	C	80595-73003
	D7	80595-18400	KNOB-DOOR LOCK	1	10	VAN VAN-DELUXE					
*	D8	80595-21003	KNOB-DOOR LOCK	2	10	WAGON & VAN STD			C	C	80595-18400
	D9	80595-N1600	KNOB-DOOR LOCK	2	5	WAGON & VAN STD			Y	N	80595-21003
	10	80595-18403	KNOB-DOOR LOCK	1	10	VAN VAN-DELUXE					

NOTE:

© 1972 NISSAN MOTOR CO., LTD.

PRINTED IN JAPAN

TAIL GATE PANEL, TRIM, LOCK & REAR BUMPER (W & V)

S	KEY NO.	PART NO.	DESCRIPTION	Q'TY	UNIT PKG FOR DIST.	APPLIED MODEL	APPLIED DATE FROM	APPLIED DATE UP TO	ICA N	ICA F	SUPERSEDED
*	4311	80595-21005	KNOB-DOOR LOCK	2	10	WAGON & VAN STD			C	C	80595-18403
	12	80595-N1602	KNOB-DOOR LOCK	2	5	WAGON & VAN STD			C	C	80595-21005
	4401	80595-18402	KNOB-DOOR LOCK	1	10	VAN VAN-DELUXE					
*	02	80595-21004	KNOB-DOOR LOCK	2	10	WAGON & VAN STD			C	C	80595-18402
	03	80595-N1601	KNOB-DOOR LOCK	2	5	WAGON & VAN STD			C	C	80595-21004

NOTE:

C

PRINTED IN JAPAN

© 1972 NISSAN MOTOR CO., LTD.

REVISED: DECEMBER, 1972

NOTE

Printed in Japan

NISSAN MOTOR CO., LTD.

TAIL GATE TRIMMING (W & V)

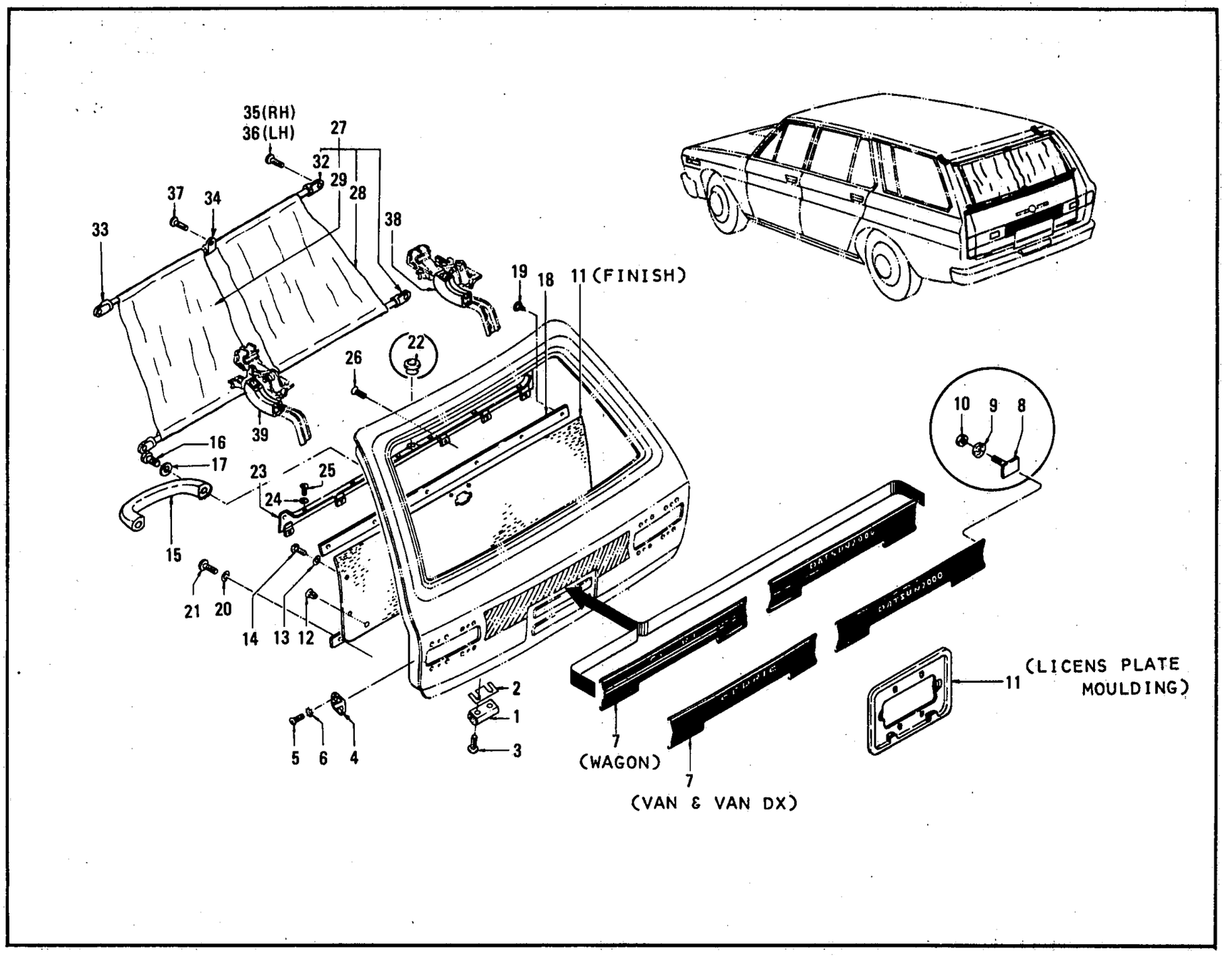

ILLUSTRATION **264**

© 1972 NISSAN MOTOR CO., LTD.

REVISED: DECEMBER, 1972

PRINTED IN JAPAN

TAIL GATE TRIMMING (W & V)

S	KEY NO.	PART NO.	DESCRIPTION	Q'TY	UNIT PKG FOR DIST.	APPLIED MODEL	APPLIED DATE FROM	APPLIED DATE UP TO	ICA N	ICA F	SUPERSEDED
	1D1	90815-E0402	RUBBER-BUMPER TAIL GATE	2	5	WAGON & VAN					
	2D1	90816-E0402	SPACER-BUMPER RUBBER	2	10	WAGON & VAN					
	3D1	00314-01018	MACHINE-SCREW	4	50	WAGON & VAN					
	4D1	90590-68400	STRIKER	2	5	WAGON & VAN	1069				
*	5D1	00324-51610	SCREW-MACHINE	2	50	WAGON & VAN					
	D2	00324-51612	SCREW-MACHINE	2	10	WAGON & VAN			Y	N	00324-51610
	6D1	00916-41510	COUNTER-SUNK TOOTH LOCK	2	50	WAGON & VAN					
	7D1	90810-E1500	FINISHER-TAIL GATE	1	1	WAGON					
	D2	90810-E1400	FINISHER-TAIL GATE	1	1	VAN VAN-DX					
	8D1	90816-E0400	RETAINER-FINISHER TAIL GATE	8	10	WAGON & VAN					
	9D1	78806-73000	CUP-SEALER FENDER MOULDING	8	10	WAGON & VAN					
	10D1	00911-10610	NUT-HEX	8	50	WAGON & VAN					
	11D1	96211-73001	MOULDING-LICENCE PLATE	1	1	WAGON & VAN					
	D2	90900-E0500	ASSY-FINISH TAILE GATE BLACK #1703	1	1	WAGON					
	D3	90900-E0501	ASSY-FINISH TAIL GATE BROWN #1381	1	1	WAGON					
	D4	90900-E0400	ASSY-FINISH TAIL GATE BLACK #1374	1	1	VAN VAN-DX					
	D5	90900-E0401	ASSY-FINISH TAIL GATE BROWN #1381	1	1	VAN					
	12D1	80919-32200	CLIP-DOOR FINISH	6	50	WAGON & VAN					
	13D1	80999-89900	WASHER-FINISH	4	50	WAGON & VAN					
	14D1	00530-61320	SCREW-TAPPING	4	50	WAGON & VAN					
	15D1	90940-E0401	HANDLE-PULL TAIL GATE	1	1	WAGON & VAN					

NOTE:

© 1972 NISSAN MOTOR CO., LTD.

PRINTED IN JAPAN

TAIL GATE TRIMMING (W & V)

S	KEY NO.	PART NO.	DESCRIPTION	Q'TY	UNIT PKG FOR DIST.	APPLIED MODEL	APPLIED DATE FROM	APPLIED DATE UP TO	ICA N	ICA F	SUPERSEDED
	16D1	00414-43042	SCREW	2	50	WAGON & VAN					
	17D1	00915-41442	WASHER-PLAIN	2	50	WAGON & VAN					
	18D1	90948-E0400	RETAINER-TAIL GATE FINISH UPPER	1	1	VAN VAN-DX					
	19D1	00520-81310	SCREW-TAPPING	6	50	WAGON & VAN					
	20D1	80999-89900	WASHER-FINISH	4	50	WAGON					
	21D1	00530-61320	SCREW-TAPPING	4	50	WAGON					
	22D1	80970-E0400	GROMMET-LOCK KNOB	1	10	VAN VAN-DX					
	23D1	90950-E0501	ASSY-GARNISH TAIL GATE BROWN	1	1	WAGON					
	24D1	80999-89900	WASHER-FINISH	6	50	WAGON					
	25D1	00530-61320	SCREW-TAPPING	6	50	WAGON					
	26D1	00521-01310	SCREW-TAPPING	6		WAGON					
	27D1	90980-E0500	SET-SHADE TAIL GATE WINDOW	1	1	WAGON					
*	28D1	90981-E0500	SHADE-TAIL GATE WINDOW RH	1	1	WAGON					
*	29D1	90982-E0500	SHADE-TAIL GATE WINDOW LH	1	1	WAGON					
	30D1	90983-E0500	SUPPORT-SHADE UPPER	1	1	WAGON					
	31D1	90984-E0500	SUPPORT-SHADE LOWER	1	1	WAGON					
	32D1	90985-E0500	BRACKET-SUPPORT SHADE	2	5	WAGON					
	33D1	90985-E0501	BRACKET-SUPPORT SHADE LH	2	5	WAGON					
	34D1	90986-E0501	BRACKET-SUPPOR SHADE CENTER	1	5	WAGON					
	35D1	96706-80700	SCREW-GROMMET	4	10	WAGON					
	36D1	00530-82620	SCREW-TAPPING	4	50	WAGON					
	37D1	00531-01320	SCREW-TAPPING	2	50	WAGON					

NOTE:

© 1972 NISSAN MOTOR CO., LTD.

REVISED: DECEMBER, 1972
PRINTED IN JAPAN
C

TAIL GATE TRIMMING (W & V)

S	KEY NO.	PART NO.	DESCRIPTION	Q'TY	UNIT PKG FOR DIST.	APPLIED MODEL	APPLIED DATE FROM	APPLIED DATE UP TO	ICA N	ICA F	SUPERSEDED
	3801	90921-E0500	PAD-TAIL GATE HINGE ARM RH	1	5	WAGON					
	3901	90922-E0500	PAD-TAIL GATE HINGE ARM LH	1	5	WAGON					

NOTE:

© 1972 NISSAN MOTOR CO., LTD.

PRINTED IN JAPAN

NOTE

NISSAN MOTOR CO., LTD.

Printed in Japan

NOTE

Printed in Japan

NISSAN MOTOR CO., LTD.

FRONT SEAT & SLIDE (BENCH TYPE FOR WAGON)

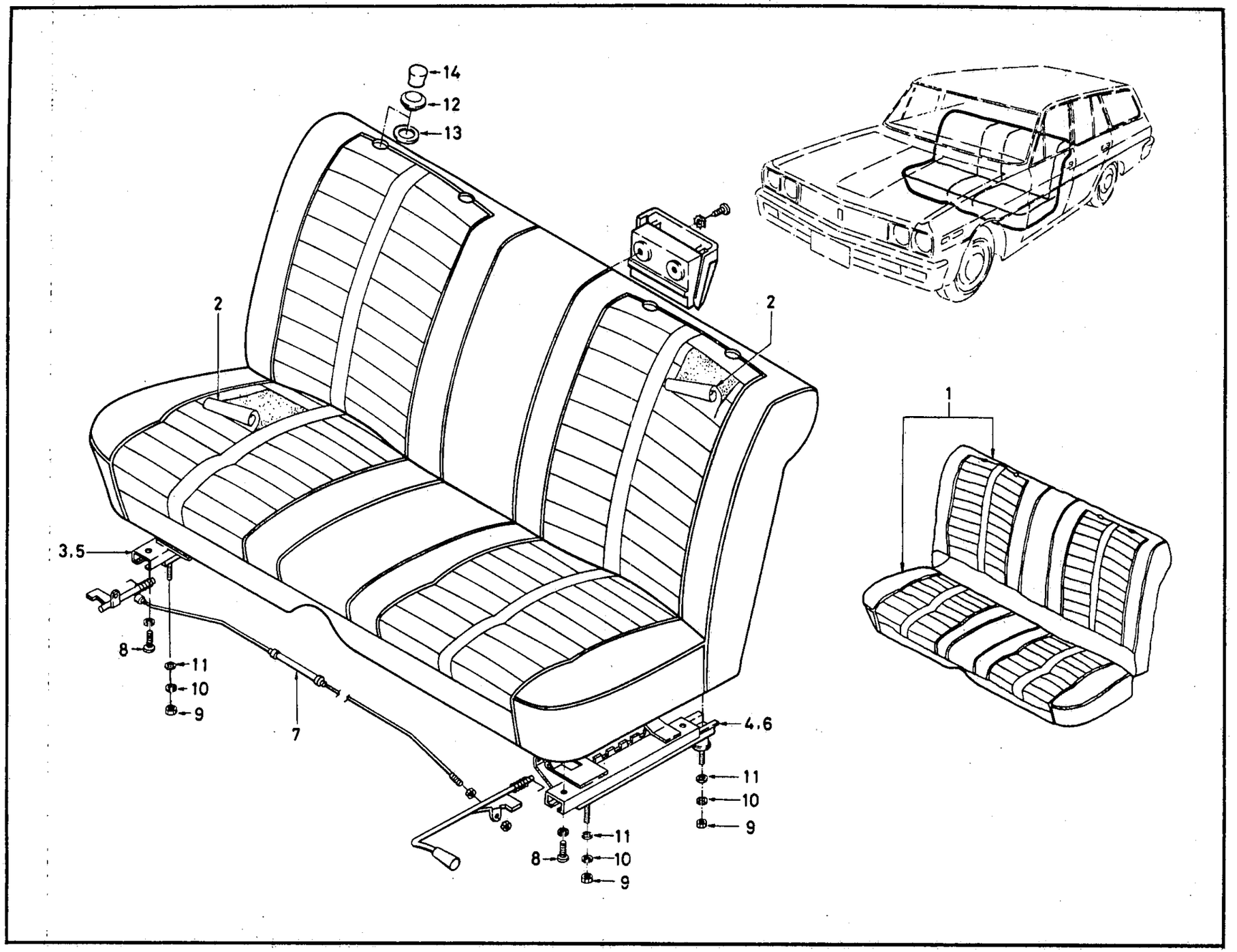

© 1972 NISSAN MOTOR CO., LTD.

REVISED: DECEMBER, 1972

PRINTED IN JAPAN

FRONT SEAT & SLIDE (BENCH TYPE FOR VAN)

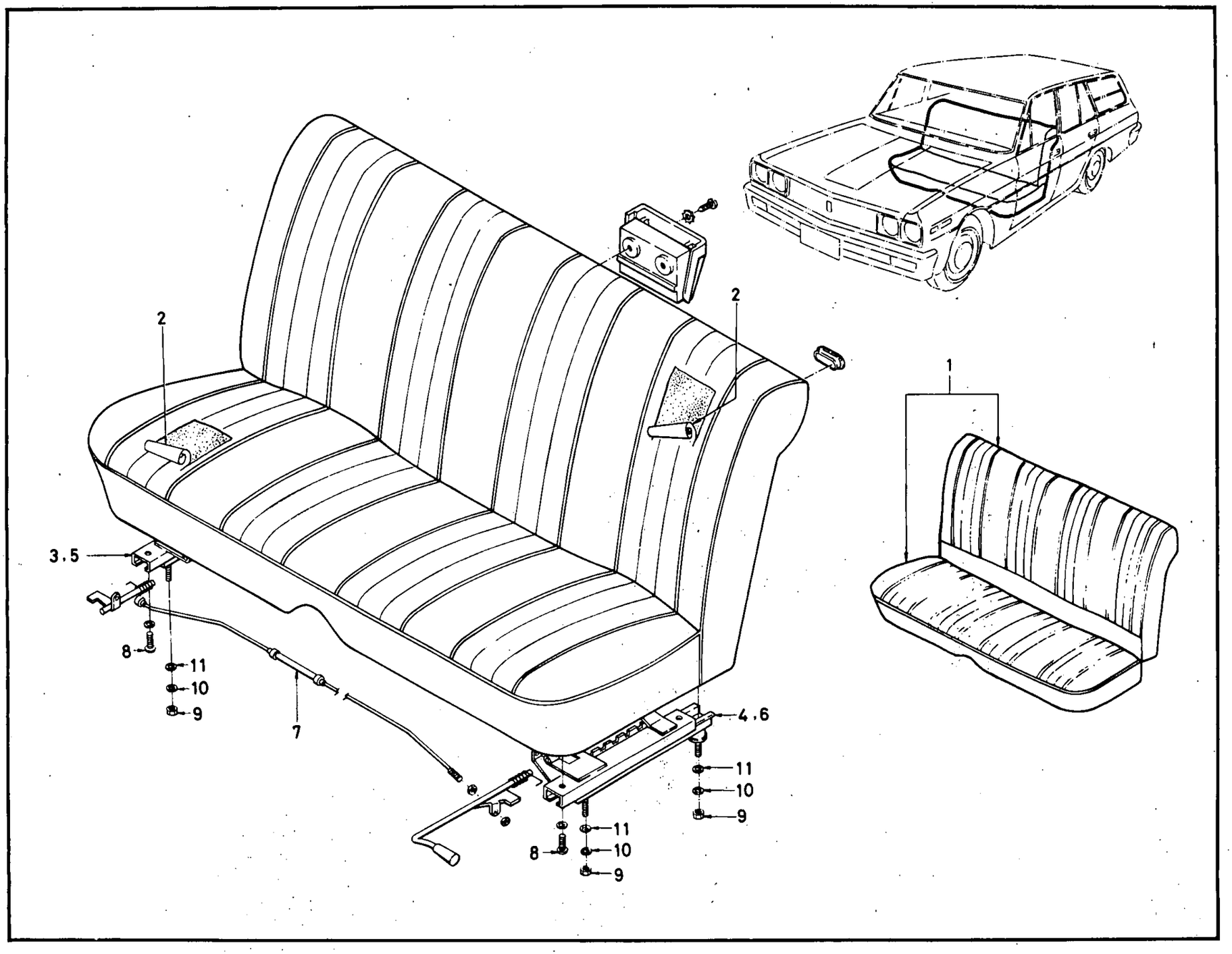

© 1972 NISSAN MOTOR CO., LTD.

PRINTED IN JAPAN

FRONT SEAT & SLIDE (W & V BENCH TYPE)

S	KEY NO.	PART NO.	DESCRIPTION	Q'TY	UNIT PKG FOR DIST.	APPLIED MODEL	APPLIED DATE FROM	APPLIED DATE UP TO	ICA N	ICA F	SUPERSEDED
	101	- 86000-E0500	ASSY-FRONT SEAT COMP BROWN	1	1	WAGON RD					
	02	- 86000-E1500	ASSY-FRONT SEAT COMP BROWN	1	1	WAGON LD					
	03	- 86000-E0401	ASSY-FRONT SEAT COMP BLACK	1	1	VAN VAN-DX R DRIVE					
	04	- 86000-E0400	ASSY-FRONT SEAT COMP BROWN	1	1	VAN VAN-DX R DRIVE					
	05	- 86000-E1401	ASSY-FRONT SEAT COMP BLACK	1	1	VAN VAN-DX R DRIVE					
	06	- 86000-E1400	ASSY-FRONT SEAT COMP BROWN	1	1	VAN VAN-DX R DRIVE					
	201	- 86320-E0500	ASSY-TRIM FRONT SEAT CUSHION BROWN	1	1	WAGON					
	02	- 86620-E0500	ASSY-TRIM FRONT SEAT BACK BROWN	1	1	WAGON					
	03	- 86320-E0401	ASSY-TRIM FRONT SEAT CUSHION BLACK	1	1	VAN VAN-DX					
	04	- 86320-E0400	ASSY-TRIM FRONT SEAT CUSHION BROWN	1	1	VAN VAN-DX					
	05	- 86620-E0401	ASSY-TRIM FRONT SEAT BACK BLACK	1	1	VAN VAN-DX					
	06	- 86620-E0400	ASSY-TRIM FRONT SEAT BACK BROWN	1	1	VAN VAN-DX					
	301	- 86501-E0400	ASSY-SLIDE FRONT SEAT RH	1	1	WAGON & VAN RD					
	401	- 86502-E0400	ASSY-SLIDE FRONT SEAT LH	1	1	WAGON & VAN RD					
	501	- 86501-E1400	ASSY-SLIDE FRONT SEAT RH	1	1	WAGON & VAN LD					
	601	- 86502-E1400	ASSY-SLIDE FRONT SEAT LH	1	1	WAGON & VAN LD					
	701	- 86532-69600	ASSY-CABLE RELEASE	1	5	WAGON & VAN					
	801	- 00314-51610	SCREW-MACHINE	4	50	WAGON & VAN					

NOTE:

© 1972 NISSAN MOTOR CO., LTD.

REVISED: DECEMBER, 1972

PRINTED IN JAPAN

FRONT SEAT & SLIDE (W & V BENCH TYPE)

S	KEY NO.	PART NO.	DESCRIPTION	QTY	UNIT PKG FOR DIST.	APPLIED MODEL	APPLIED DATE FROM	APPLIED DATE UP TO	ICA N	ICA F	SUPERSEDED
	901	- 00911-14510	NUT	4	50	WAGON & VAN					
	1001	- 00915-11510	WASHER-LOCK	4	50	WAGON & VAN					
	1101	- 00915-41510	WASHER-PLAIN	4	50	WAGON & VAN					
	1201	- 86982-A0600	EYELET-SEAT BACK A	4	1	WAGON & VAN					
	1301	- 86983-A0600	EYELET-SEAT BACK B	4	1	WAGON & VAN					
	1401	- 86981-A0600	PLUG-SEAT BACK RED	4	1	WAGON & VAN					
	02	- 86981-A0601	PLUG-SEAT BACK BLUCK	4	1	WAGON & VAN					
	03	- 86981-A0602	PLUG-SEAT BACK BROWN	4	1	WAGON & VAN					
	04	- 86981-A0604	PLUG-SEAT BACK GRAY	4	1	WAGON & VAN					

NOTE:

© 1972 NISSAN MOTOR CO., LTD.

PRINTED IN JAPAN

NOTE

NISSAN MOTOR CO., LTD.

Printed in Japan

NOTE

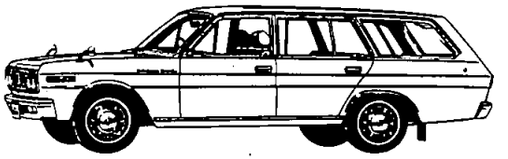

Printed in Japan

NISSAN MOTOR CO., LTD.

REAR SEAT (BENCH TYPE FOR WAGON)

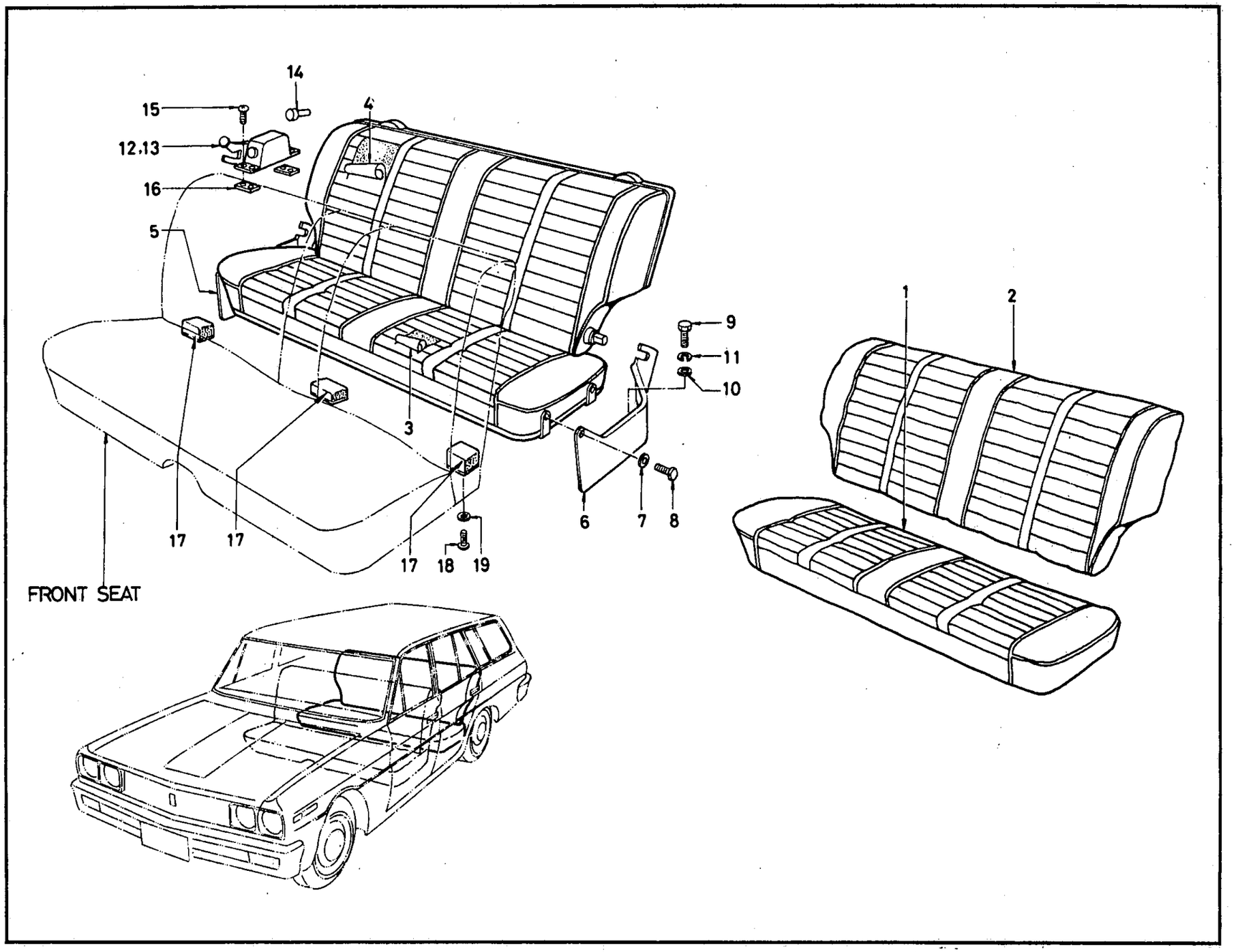

ILLUSTRATION **266-1**

© 1972 NISSAN MOTOR CO., LTD.

REVISED: DECEMBER, 1972

PRINTED IN JAPAN

C

REAR SEAT (BENCH TYPE FOR VAN)

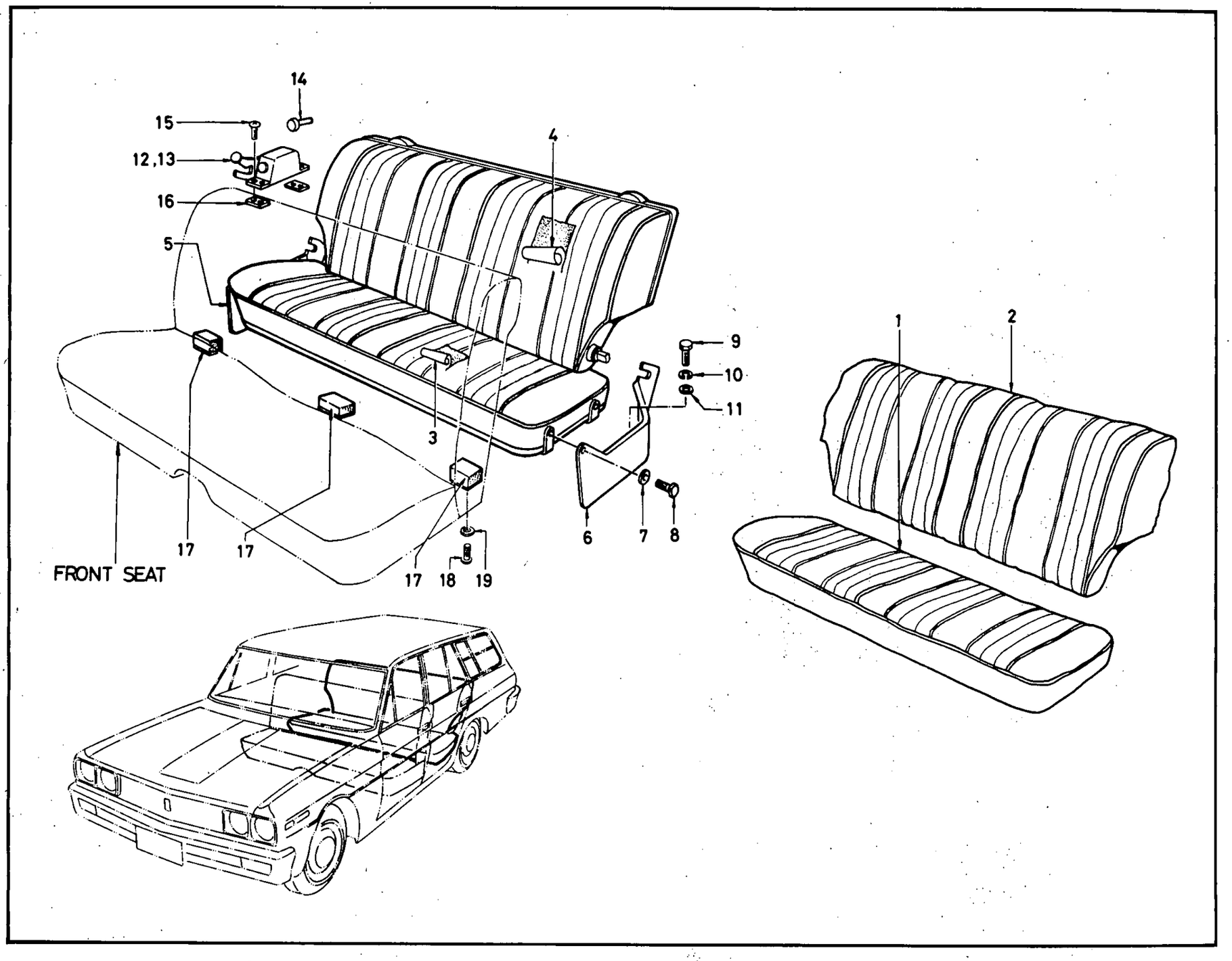

© 1972 NISSAN MOTOR CO., LTD.

PRINTED IN JAPAN

REAR SEAT (W & V BENCH TYPE)

S	KEY NO.	PART NO.	DESCRIPTION	Q'TY	UNIT PKG FOR DIST.	APPLIED MODEL	APPLIED DATE FROM	APPLIED DATE UP TO	ICA N	ICA F	SUPERSEDED
	101	88200-E0500	ASSY-REAR SEAT CUSHION COMP BROWN	1	1	WAGON					
	02	88200-E0400	ASSY-REAR SEAT CUSHION COMP BROWN	1	1	VAN VAN-DX					
	03	88200-E0401	ASSY-REAR SEAT CUSHION COMP BLACK	1	1	VAN VAN-DX					
	201	88500-E0500	ASSY-REAR SEAT BACK COMP BROWN	1	1	WAGON					
	02	88500-E0400	ASSY-REAR SEAT BACK COMP BROWN	1	1	VAN VAN-DX					
	03	88500-E0401	ASSY-REAR SEAT BACK COMP BLACK	1	1	VAN VAN-DX					
	301	88320-E0500	TRIM-REAR SEAT CUSHION BROWN	1	1	WAGON					
	02	88320-E0400	TRIM-REAR SEAT CUSHION BROWN	1	1	VAN VAN-DX					
	03	88320-E0401	TRIM-REAR SEAT CUSHION BLACK	1	1	VAN VAN-DX					
	401	88620-E0500	TRIM-REAR SEAT BACK BROWN	1	1	WAGON					
	02	88620-E0400	TRIM-REAR SEAT BACK BROWN	1	1	VAN VAN-DX					
	03	88620-E0401	TRIM-REAR SEAT BACK BLACK	1	1	VAN VAN-DX					
	501	88111-78020	BRACKET-REAR SEAT RH	1	1	WAGON & VAN					
	02	88111-E0440	BRACKET-REAR SEAT RH	1	1	WAGON & VAN FOR FRANCE USE					
	601	88112-78020	BRACKET-REAR SEAT LH	1	1	WAGON & VAN					
	02	88112-E0440	BRACKET-REAR SEAT LH	1	1	WAGON & VAN FOR FRANCE USE					
	701	88841-09100	WASHER-PLAIN	2	10	WAGON & VAN					
	801	88115-73200	PIN-REAR SEAT CUSHION	2	10	WAGON & VAN					
	901	00114-52210	BOLT	8	50	WAGON & VAN					

NOTE:

© 1972 NISSAN MOTOR CO., LTD.

REVISED: DECEMBER, 1972

PRINTED IN JAPAN

C

REAR SEAT (W & V BENCH TYPE)

S	KEY NO.	PART NO.	DESCRIPTION	QTY	UNIT PKG FOR DIST.	APPLIED MODEL	APPLIED DATE FROM	APPLIED DATE UP TO	ICA N	ICA F	SUPERSEDED
	1001	- 00915-41510	WASHER-PLAIN	8	50	WAGON & VAN					
	1101	- 00915-11510	WASHER-SPRING LOCK	8	50	WAGON & VAN					
	1201	- 88131-73200	ASSY-CATCHER REAR BACK RH	1	1	WAGON & VAN					
	1301	- 88132-73200	ASSY-CATCHER REAR BACK LH	1	1	WAGON & VAN					
	1401	- H8131-73201	BUMPER-CATCHER	2	10	WAGON & VAN					
	1501	- 00434-01620	SCREW-MACHINE OVAL HEAD	8	50	WAGON & VAN					
	1601	- 88139-73200	SHIM-REAR SEAT BACK CATCHER	AR	10	WAGON & VAN					
	1701	- 88121-73201	BUMPER-REAR SEAT CUSHION	2	5	WAGON & VAN					
	02	- 88122-E0400	BUMPER-REAR SEAT CUSHION	1	5	WAGON & VAN					
	1801	- 00511-01610	SCREW-TAPPING PAN HEAD	2	50	WAGON & VAN					
	1901	- 00915-41010	WASHER-PLAIN	2	50	WAGON & VAN					

NOTE:

© 1972 NISSAN MOTOR CO., LTD.

PRINTED IN JAPAN

NOTE

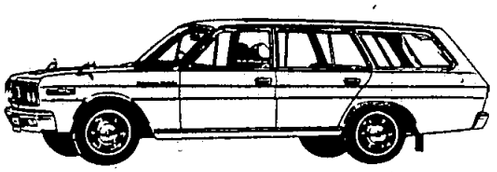

NOTE

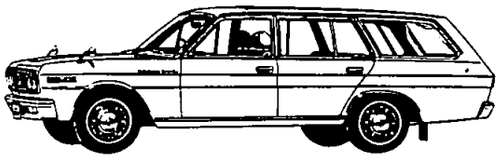

Printed in Japan

NISSAN MOTOR CO., LTD.

THIRD SEAT & LINK (WAGON)

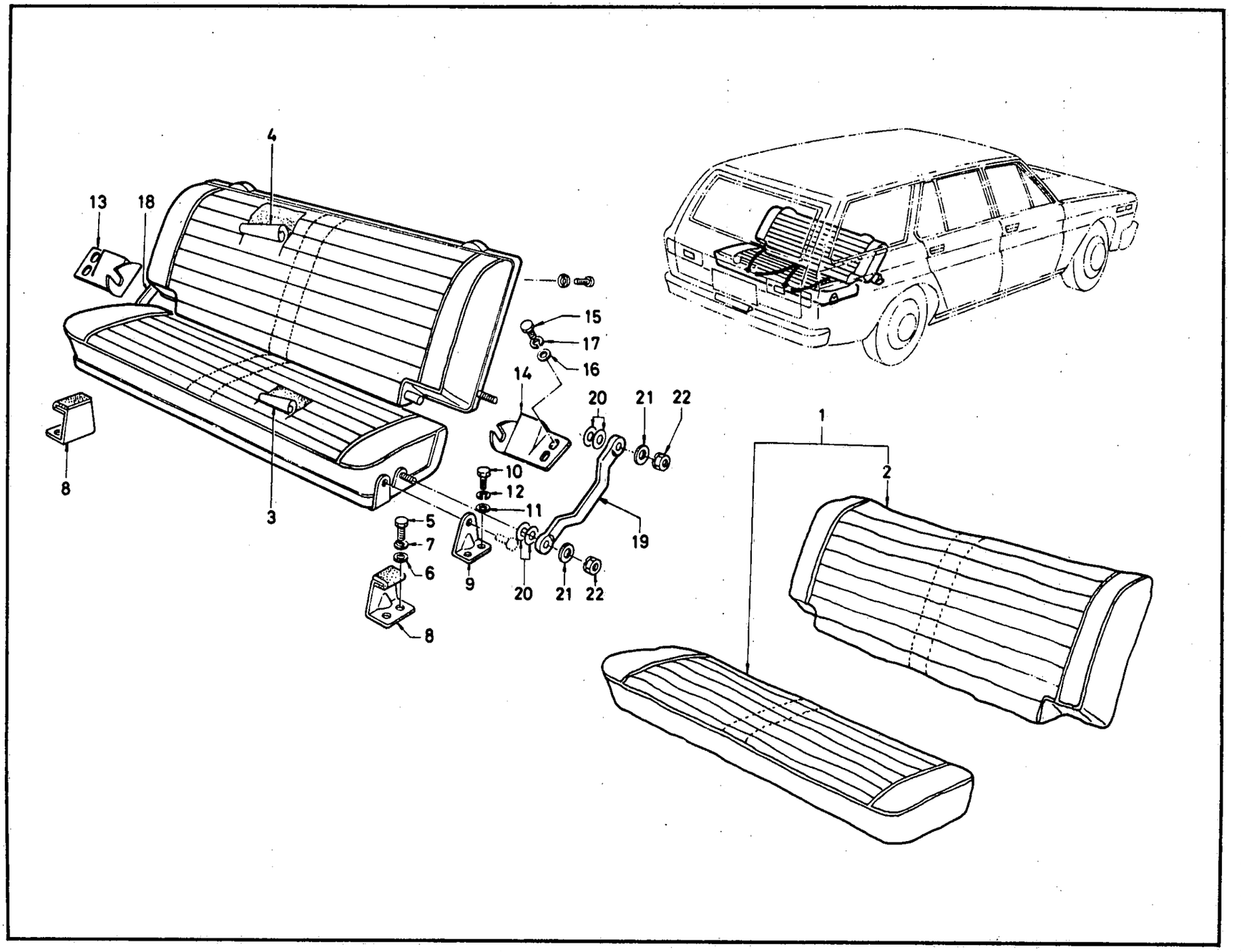

© 1972 NISSAN MOTOR CO., LTD.

REVISED: DECEMBER, 1972

PRINTED IN JAPAN

C

THIRD SEAT & LINK (WAGON)

S	KEY NO.	PART NO.	DESCRIPTION	QTY	UNIT PKG FOR DIST.	APPLIED MODEL	APPLIED DATE FROM	APPLIED DATE UP TO	ICA N	ICA F	SUPERSEDED
	101	89200-E0500	ASSY-3 RD SEAT COMP BROWN	1		WAGON					
	201	89500-E0500	ASSY-BACK 3 RD SEAT COMP BROWN	1		WAGON					
	301	89320-E0500	ASSY-TRIM 3 RD SEAT FOR CUSHION BROWN	1		WAGON					
	401	89620-E0500	ASSY-TRIM 3 RD SEAT BACK BROWN	1		WAGON					
	501	00114-52210	BOLT-HEXAGON	4	50	WAGON					
	601	00915-41510	WASHER-PLAIN	4	50	WAGON					
	701	00915-11510	WASHER-SPRING LOCK	4	50	WAGON					
	801	74616-34900	BUMPER-RUBBER B	2	5	WAGON					
	901	89122-73300	ASSY-STAY 3 RD SEAT CUSHION	2	1	WAGON					
	1001	00114-52210	BOLT	4	50	WAGON					
	1101	00915-41510	WASHER-PLAIN	4	50	WAGON					
	1201	00915-11510	WASHER-SPRING LOCK	4	50	WAGON					
	1301	89125-73300	BRACKET-3 RD SEAT BACK RH	1	1	WAGON					
	1401	89126-73300	BRACKET-3RD SEAT BACK	1	1	WAGON					
	1501	00114-72210	BOLT	4	50	WAGON					
	1601	00915-41710	WASHER-PLAIN	4	50	WAGON					
	1701	00915-11710	WASHER-SPRING LOCK	4	50	WAGON					
	1801	89131-73300	LINK-3 RD SEAT RH	1	1	WAGON					
	1901	89132-73300	LINK-3 RD SEAT LH	1	1	WAGON					
	2001	88841-09101	WASHER-PLAIN	8	10	WAGON					
	2101	00915-41510	WASHER-PLAIN	4	50	WAGON					

NOTE:

© 1972 NISSAN MOTOR CO., LTD.

PRINTED IN JAPAN

THIRD SEAT & LINK (WAGON)

S	KEY NO.	PART NO.	DESCRIPTION	QTY	UNIT PKG FOR DIST.	APPLIED MODEL	APPLIED DATE FROM	APPLIED DATE UP TO	ICA N	ICA F	SUPERSEDED
	2201	00912-54510	NUT	4	50	WAGON					

NOTE:

© 1972 NISSAN MOTOR CO., LTD.

PRINTED IN JAPAN

NOTE

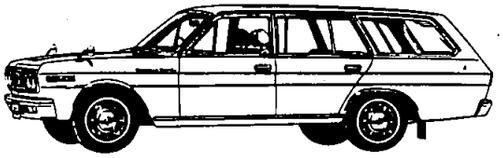

Printed in Japan

NISSAN MOTOR CO., LTD.

SAFETY BELT (W & V)

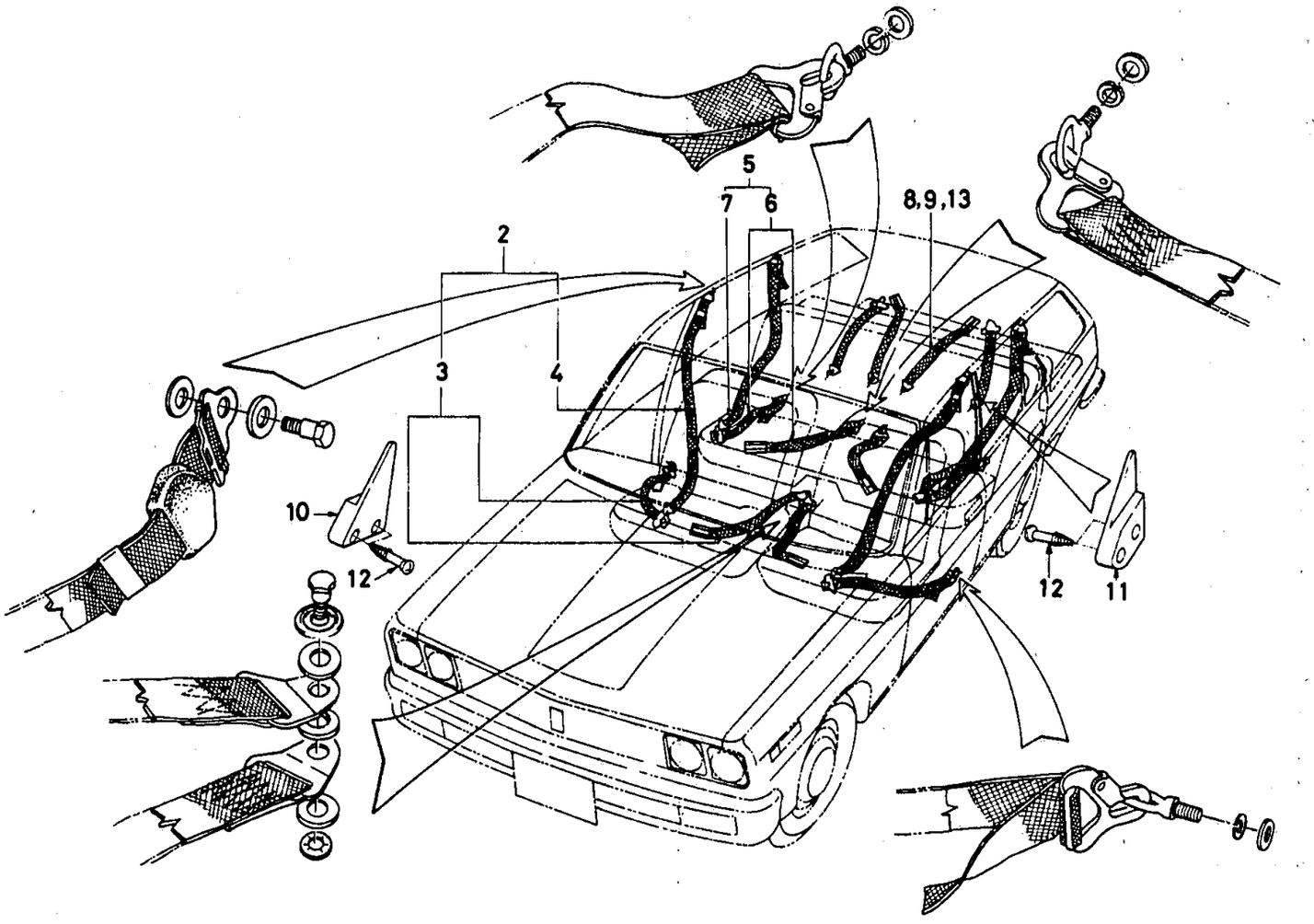

ILLUSTRATION **268-1**

© 1972 NISSAN MOTOR CO., LTD.

REVISED: DECEMBER, 1972

PRINTED IN JAPAN

HEAD REST (W & V)

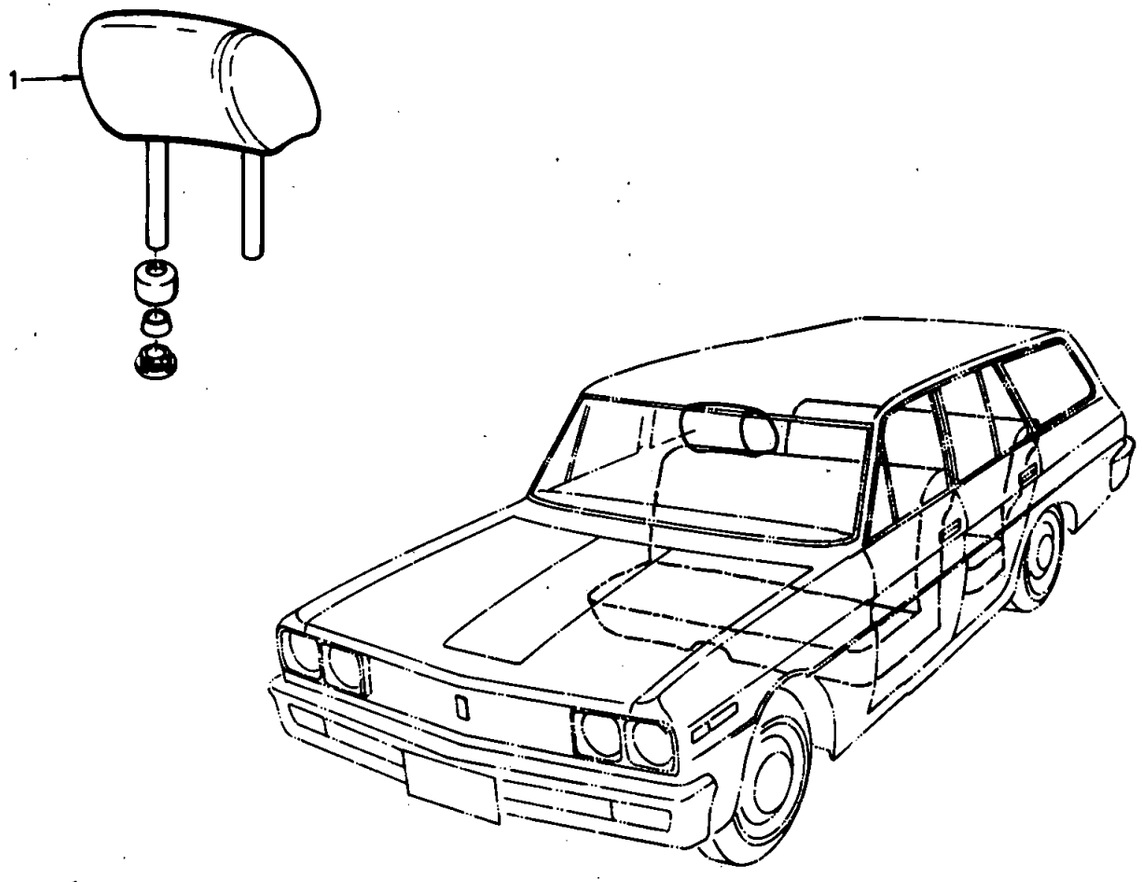

PRINTED IN JAPAN

REVISED: DECEMBER, 1972

© 1972 NISSAN MOTOR CO., LTD.

SAFETY BELT & HEAD REST (W & V)

S	KEY NO.	PART NO.	DESCRIPTION	Q'TY	UNIT PKG FOR DIST.	APPLIED MODEL	APPLIED DATE FROM	APPLIED DATE UP TO	ICA N	ICA F	SUPERSEDED
*	101	86400-E0101	ASSY-HEAD REST FRONT SEAT BLACK	2	1	OP WAGON & VAN					
	02	86400-E4900	ASSY-HEAD REST FRONT SEAT BLACK	2	1	OP WAGON & VAN			Y	Y	86400-E0101
*	201	86830-E0100	SET-SAFTY BELT FRONT SEAT 3 POINT TYPE	2		OP WAGON & VAN					
	02	86830-E0105	SET-SAFTY BELT FRONT SEAT 3 POINT TYPE	2	1	OP WAGON & VAN			Y	Y	86830-E0100
	03	86830-E4900	SET-SAFETY BELT FRONT SEAT 3POINT PUSH TYPE BLACK	2	1	OP WAGON & VAN	1069				
	301	86820-E0100	SET-SAFTY BELT FRONT SEAT 2 POINT TYPE	2		OP WAGON & VAN					
	02	86820-E0105	SET-SAFTY BELT FRONT SEAT 2 POINT TYPE	2		OP WAGON & VAN			Y	Y	86820-E0100
	03	H6820-E0100	SET-SAFETY BELT FRONT SEAT 2 POINT BLACK	2		OP WAGON & VAN					
	04	86820-E4900	SET-SAFETY BELT FRONT SEAT 2POINT PUSH TYPE BLACK	2	1	OP WAGON & VAN	1069				
*	401	86810-21004	ASSY-BELT FRONT SEAT SHOULDER	2	1	OP WAGON & VAN					
	02	86810-A4400	ASSY-BELT FRONT SEAT SHOULDER	2	1	OP WAGON & VAN			Y	Y	86810-21004
	03	H6810-08990	ASSY-BELT FRONT SEAT SHOULDER	2		OP WAGON & VAN					
	501	88830-E0400	SET-SAFTY BELT REAR SEAT 3 POINT TYPE	2		OP WAGON & VAN			Y	Y	88830-E0400
	02	88830-E0405	SET-SAFTY BELT REAR SEAT 3 POINT TYPE	2		OP WAGON & VAN					
	03	88830-E4904	SET-SAFETY BELT REAR O/SIDE 3POINT PUSH TYPE BLACK	2	1	OP WAGON & VAN	1069				

NOTE:

© 1972 NISSAN MOTOR CO., LTD.

REVISED: DECEMBER, 1972
PRINTED IN JAPAN
C

SAFETY BELT & HEAD REST (W & V)

S	KEY NO.	PART NO.	DESCRIPTION	Q'TY	UNIT PKG FOR DIST.	APPLIED MODEL	APPLIED DATE FROM	APPLIED DATE UP TO	ICA N	ICA F	SUPERSEDED
	601	88820-E0400	SET-SAFTY BELT REAR SEAT 2 POINT TYPE	2		OP WAGON & VAN					
	02	88820-E0405	SET-SAFTY BELT REAR SEAT 2 POINT TYPE	2		OP WAGON & VAN			Y	Y	88820-E0400
	03	88820-E4904	SET-SAFETY BELT REAR O/SIDE 2POINT PUSH TYPE BLACK	2	1	OP WAGON & VAN	1069				
	04	H8820-E0400	SET-SAFETY BELT REAR SEAT 2 POINT BLACK	2		OP WAGON & VAN					
*	701	86810-21004	ASSY-BELT REAR SEAT SHOULDER	2	1	OP WAGON & VAN					
	02	86810-A4400	ASSY-BELT REAR SEAT SHOULDER	2	1	OP WAGON & VAN			Y	Y	86810-21004
	03	86810-E4900	ASSY-BELT REAR SEAT SHOULDER PUSH TYPE	2	1	OP WAGON & VAN	1069				
*	801	89820-E0500	SET-SAFTY BELT 3RD SEAT	2		OP WAGON					
	02	89820-E0505	SET-SAFTY BELT 3RD SEAT	2	1	OP WAGON	1069		Y	N	89820-E0500
	901	H8820-E0101	SET-SAFETY BELT REAR CENTER	1		OP WAGON					
	02	88820-E4910	SET-SAFETY BELT REAR CENTER PUSH TYPE BLACK	1	1	OP WAGON & VAN	1069				
	1001	86811-79000	HOOK-SHOULDER BELT RH	1	1	OP WAGON & VAN					
	1101	86812-79000	HOOK-SHOULDER BELT LH	1	1	OP WAGON & VAN					
	1201	08533-42042	SCREW-MACHINE	2		OP WAGON & VAN					
*	1301	89820-E0500	SET-SAFTY BELT 3RD SEAT 2 POINT TYPE	2		OP WAGON					
	02	89820-E0505	SET-SAFTY BELT 3RD SEAT 2 POINT TYPE	2	1	OP WAGON			Y	Y	89820-E0500
	03	89820-E4905	SET-SAFETY BELT 3RD SEAT 2POINT PUSH TYPE	2	1	OP WAGON	1069				

NOTE:

© 1972 NISSAN MOTOR CO., LTD.

PRINTED IN JAPAN

NOTE

NISSAN MOTOR CO., LTD.

Printed in Japan

NOTE

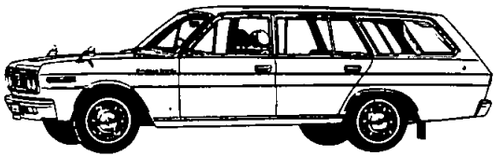

Printed in Japan

NISSAN MOTOR CO., LTD.

PUB. No.: C-0020 VOL. 2

ILLUSTRATION No.: 269, 270

A spare ILLUSTRATION No. in the future.

© 1972 NISSAN MOTOR CO., LTD.

Printed in Japan

MISCELLANEOUS

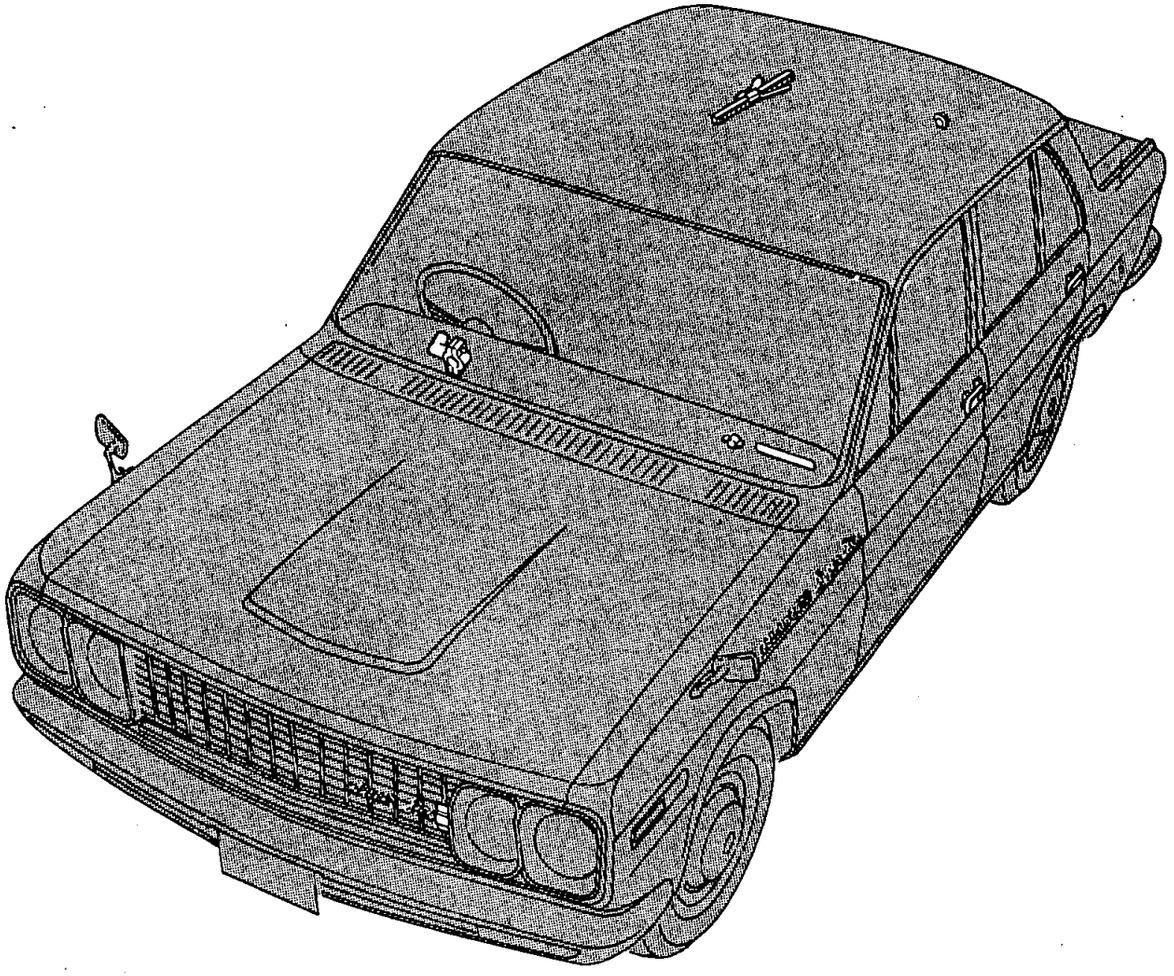

NOTE

Printed in Japan

NISSAN MOTOR CO., LTD.

EMBLEM, MARK & ORNAMENT (1)

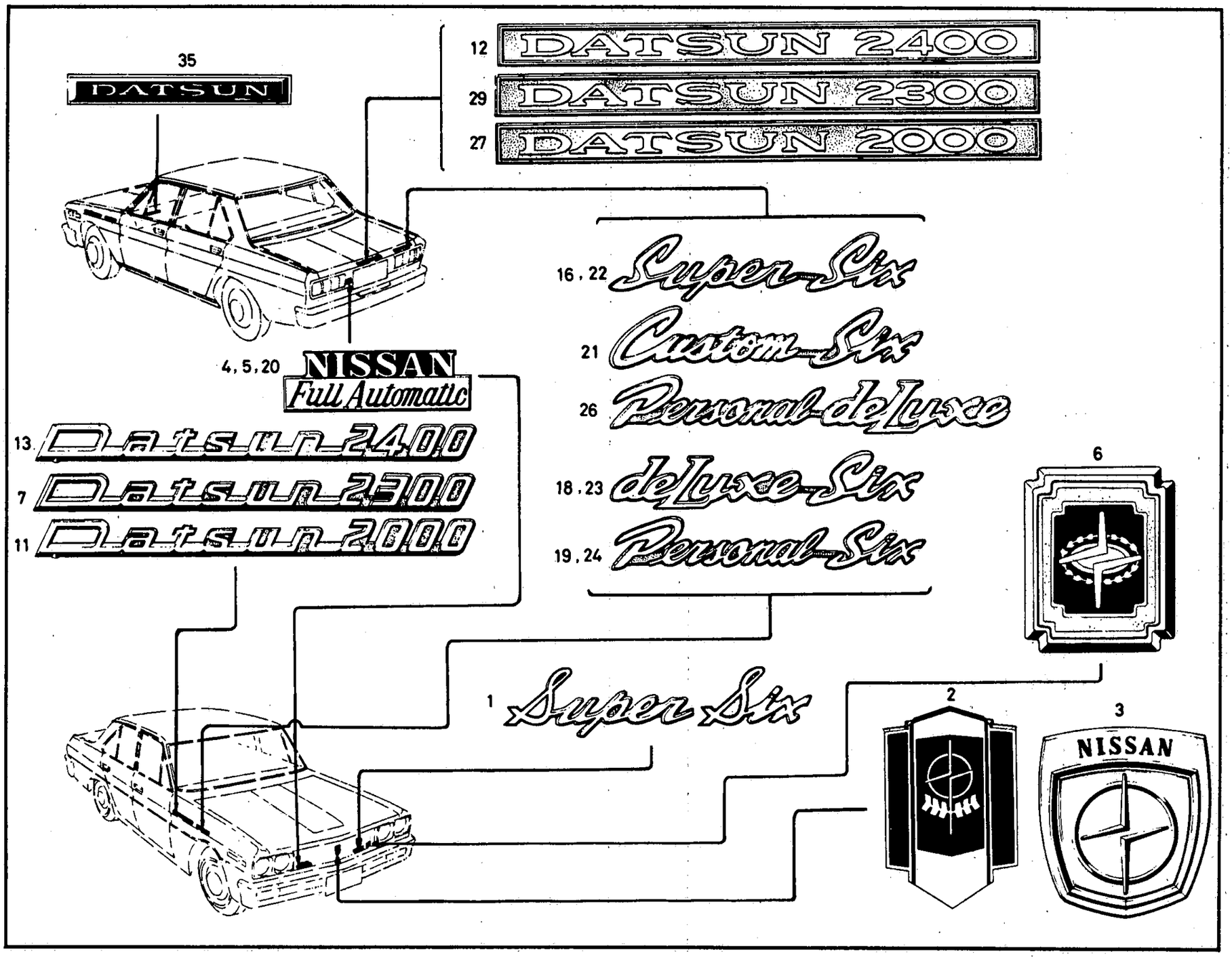

ILLUSTRATION 271-1

© 1972 NISSAN MOTOR CO., LTD.

REVISED: DECEMBER, 1972

PRINTED IN JAPAN

EMBLEM, MARK & ORNAMENT (2)

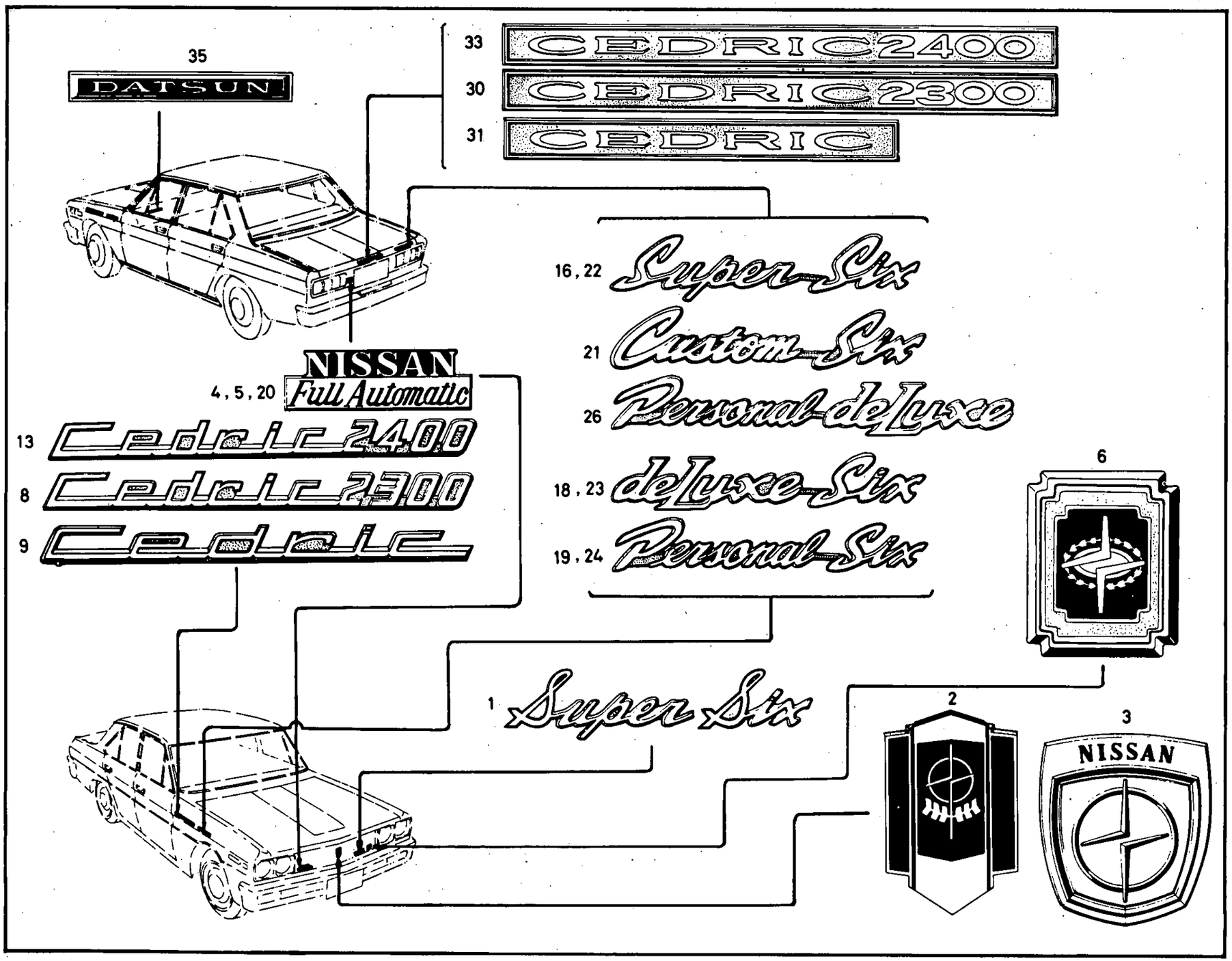

REVISED: DECEMBER, 1972

© 1972 NISSAN MOTOR CO., LTD.

PRINTED IN JAPAN

EMBLEM, MARK & ORNAMENT (3)

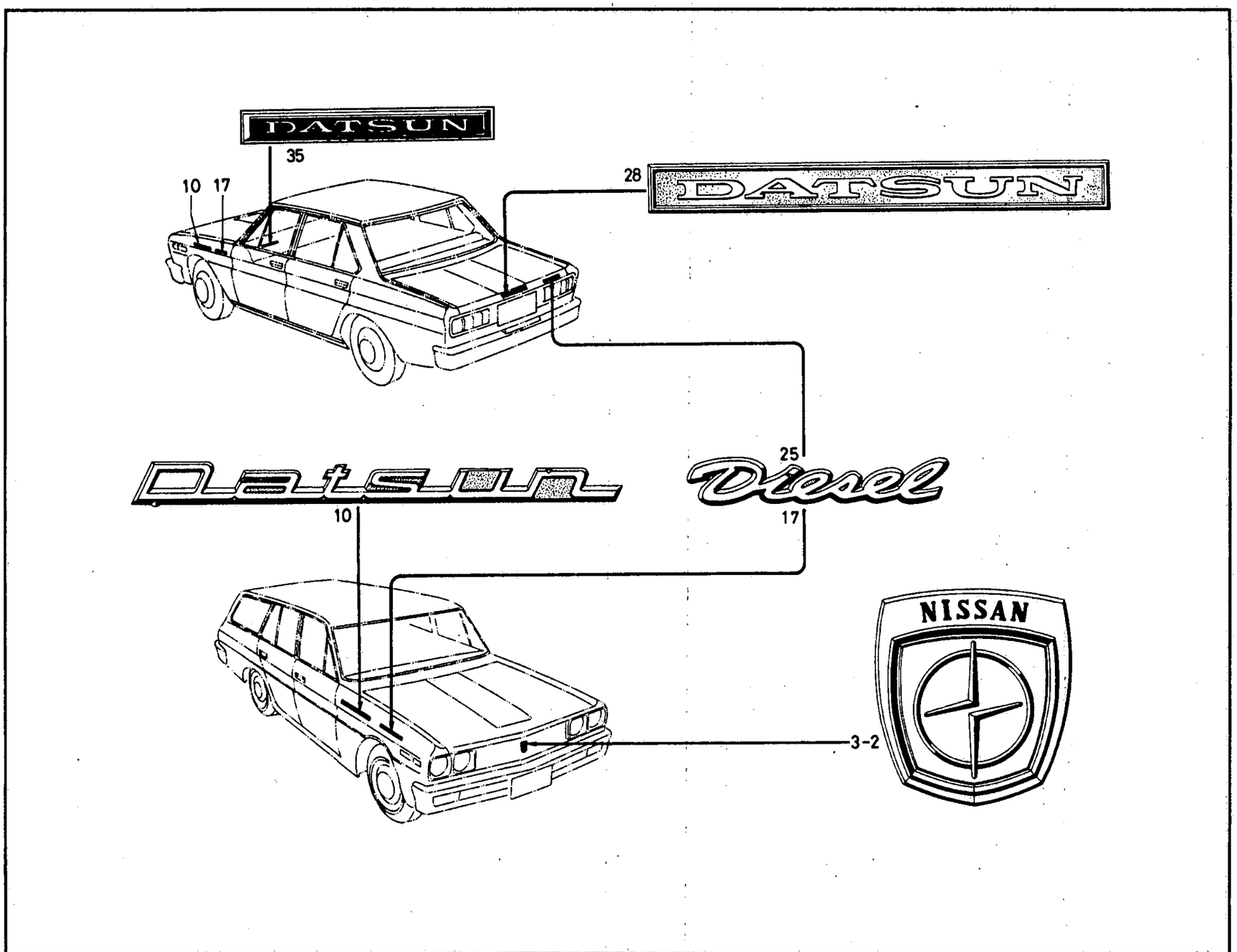

ILLUSTRATION 271-3

© 1972 NISSAN MOTOR CO., LTD.

REVISED: DECEMBER, 1972

PRINTED IN JAPAN

EMBLEM, MARK & ORNAMENT (4)

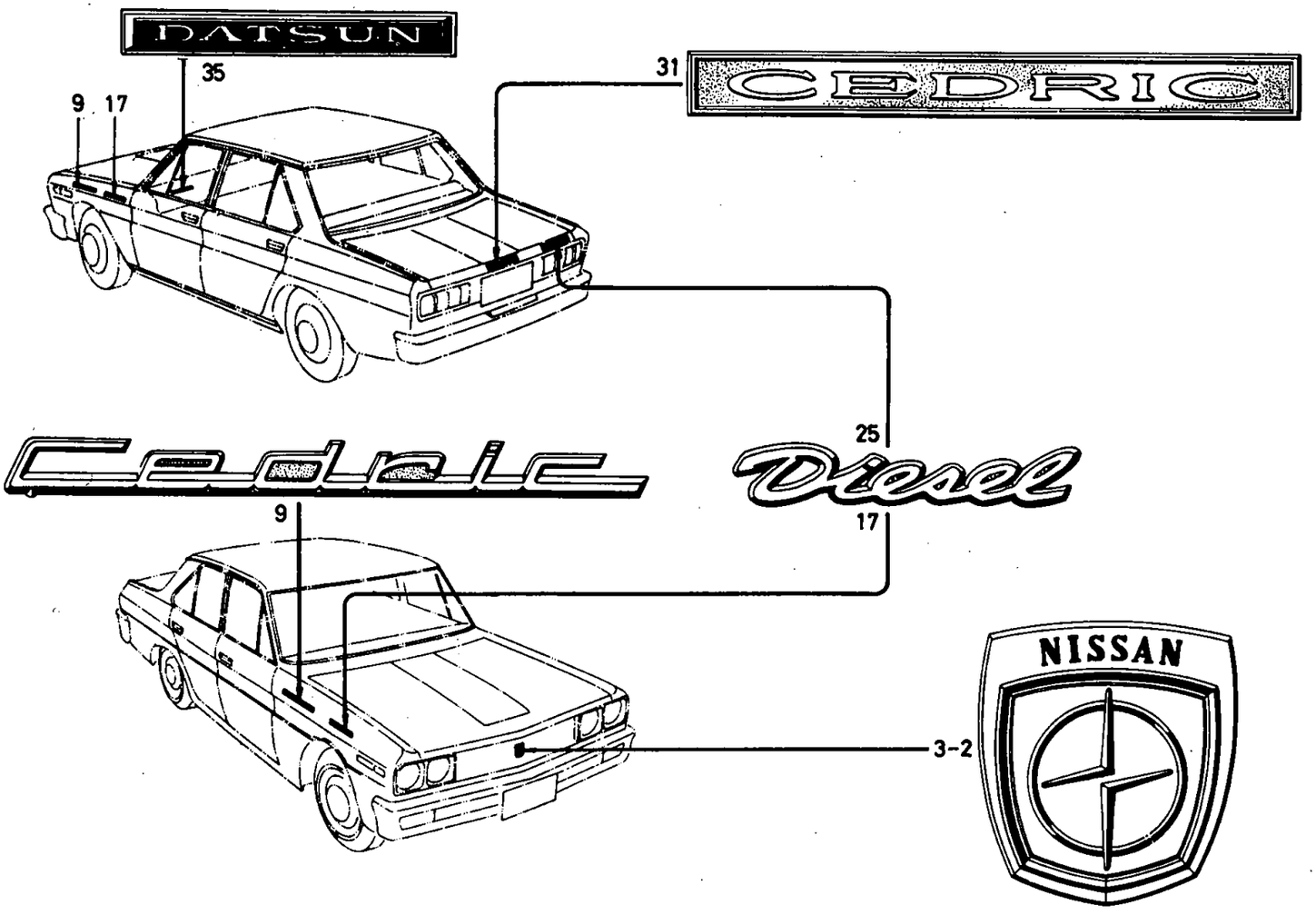

© 1972 NISSAN MOTOR CO., LTD.

PRINTED IN JAPAN

EMBLEM, MARK & ORNAMENT (5)

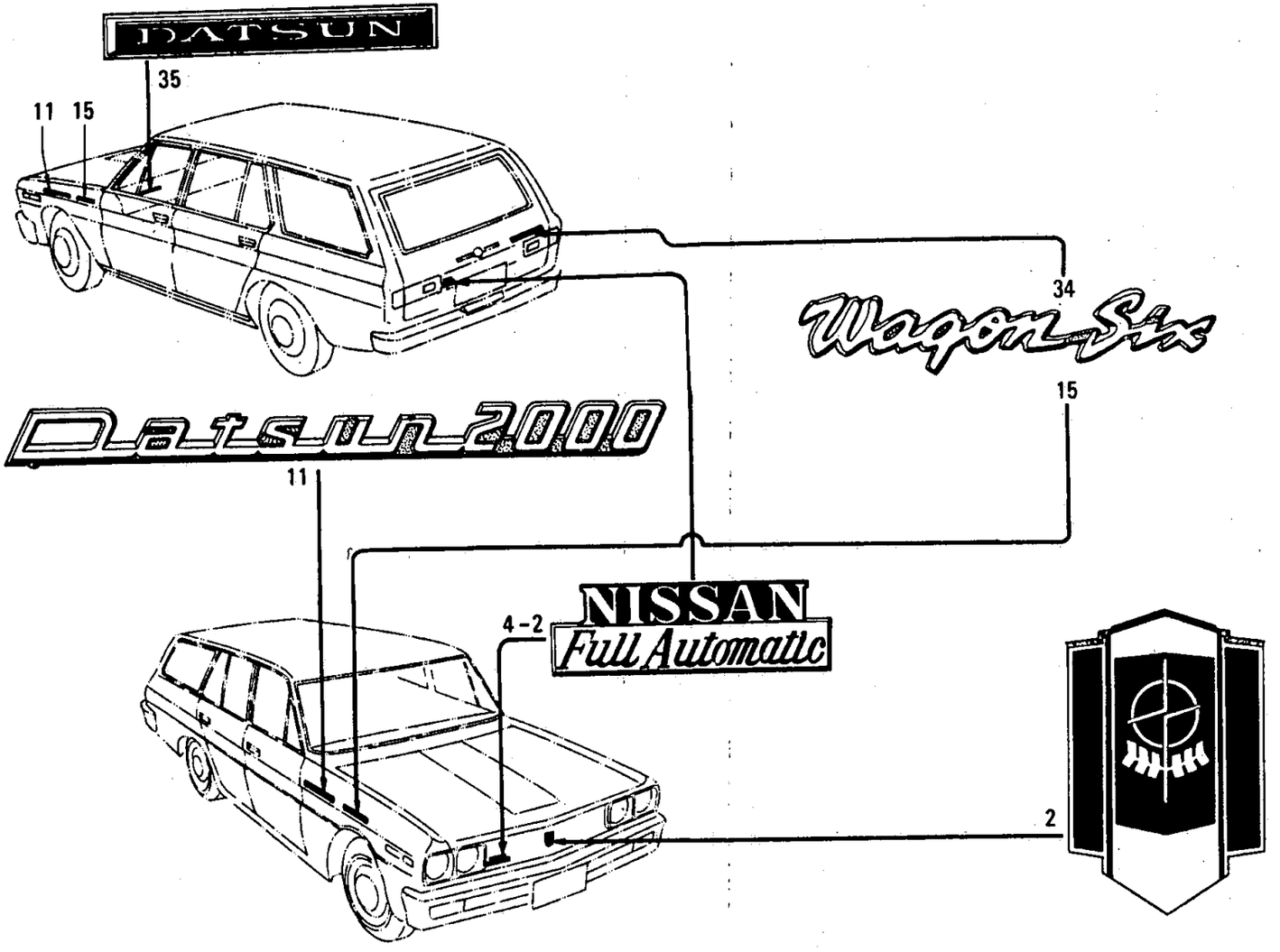

© 1972 NISSAN MOTOR CO., LTD.

REVISED: DECEMBER, 1972

PRINTED IN JAPAN

C

EMBLEM, MARK & ORNAMENT (6)

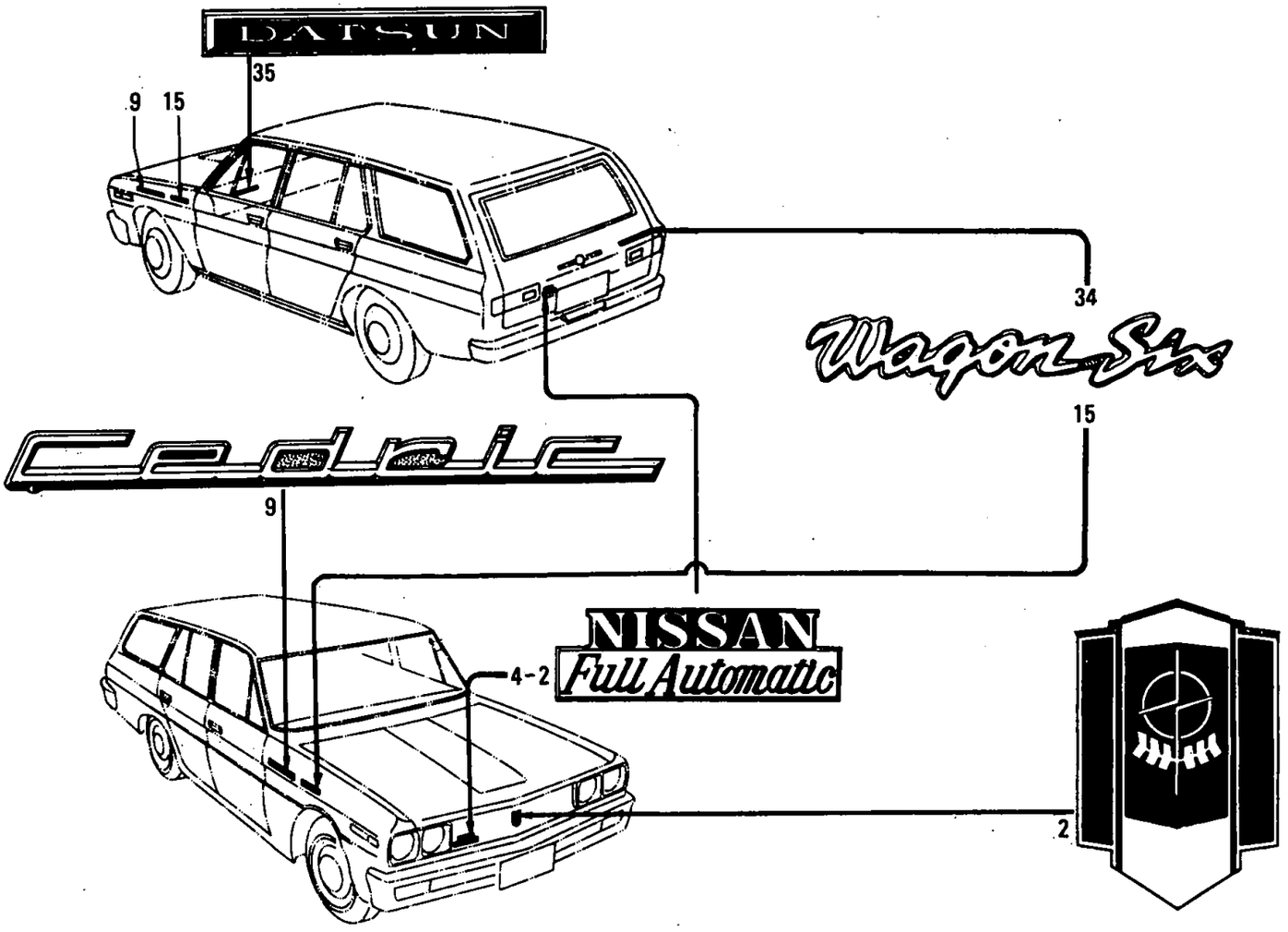

© 1972 NISSAN MOTOR CO., LTD.

PRINTED IN JAPAN

EMBLEM, MARK & ORNAMENT (7)

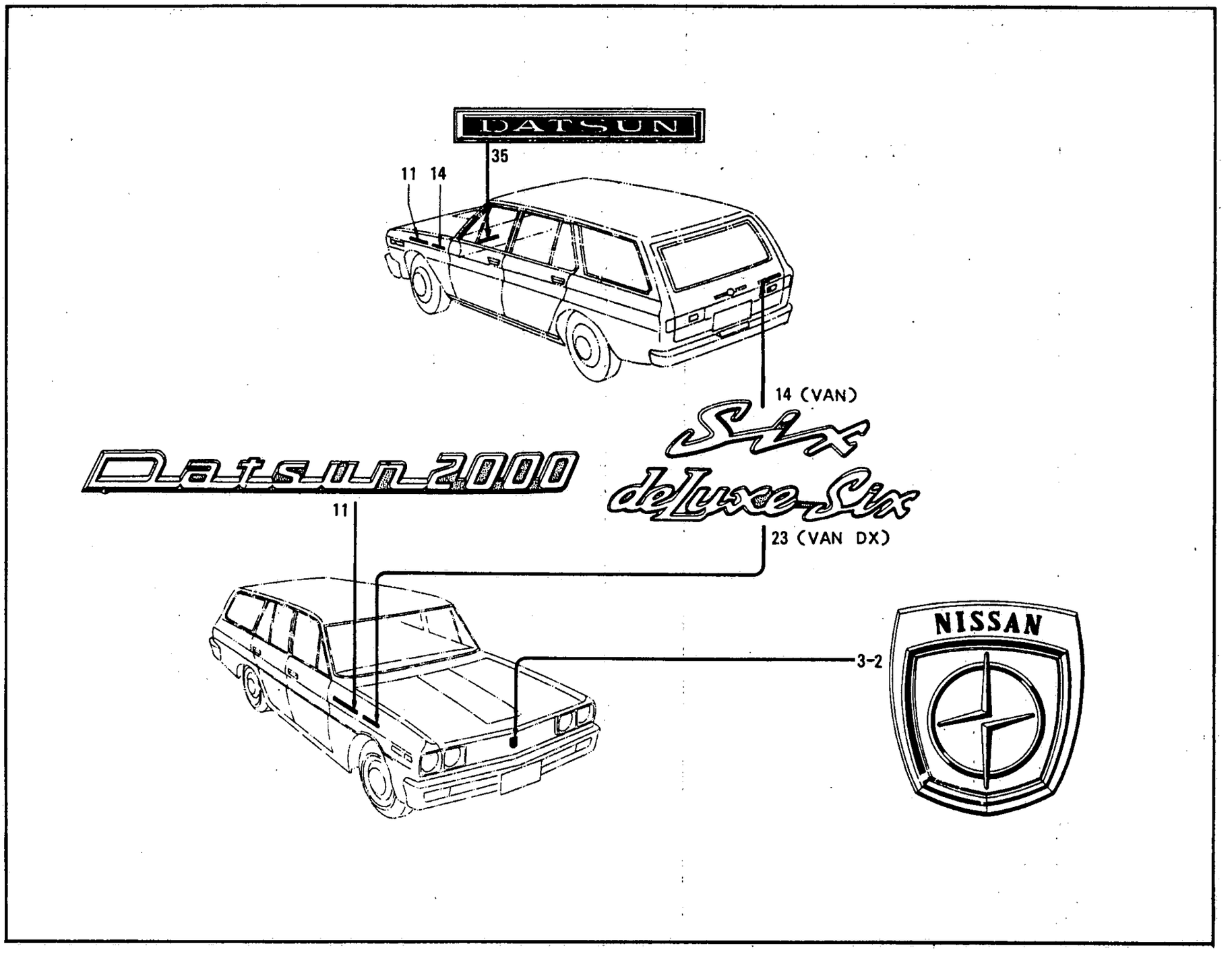

© 1972 NISSAN MOTOR CO., LTD.

REVISED: DECEMBER, 1972

PRINTED IN JAPAN

C

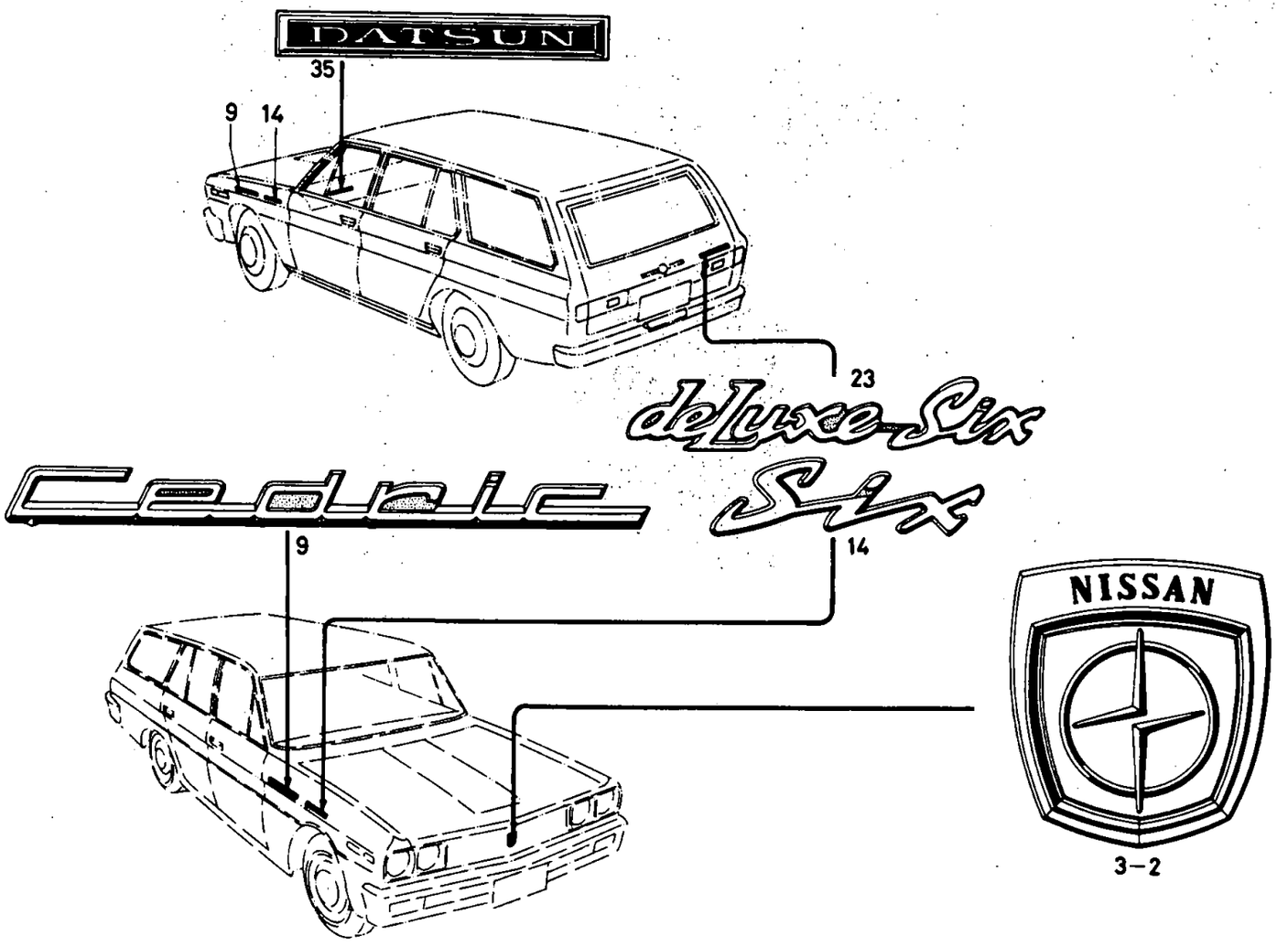

© 1972 NISSAN MOTOR CO., LTD.

PRINTED IN JAPAN

EMBLEM, MARK & ORNAMENT

S	KEY NO.	PART NO.	DESCRIPTION	QTY	UNIT PKG FOR DIST.	APPLIED MODEL	APPLIED DATE FROM	APPLIED DATE UP TO	ICA N	ICA F	SUPERSEDED
	101	62310-E3100	MARK-'SUPER SIX' RADIATOR GRILLE	1	2	SUPER	1069				
	201	62311-E0100	ASSY-ORNAMENT	1	2	SUPER DELUXE WAGON		0969			
	02	62311-E0100	ASSY-ORNAAMENT	1	2	CUSTOM WAGON	1069				
	301	62311-E0300	ASSY-ORNAMENT	1	2	P-2300 P-2000		0969			
	02	62311-E0700	ASSY-ORNAMENT	1	2	STD VAN VAN-DX DIESEL			N	N	62311-69101
	03	62313-E0200	BRACKET-ORNAMENT RAD GRILLE	1	10	SUPER DELUXE WAGON		0969			
	401	62330-E0201	MARK-NISSAN 'FULL AUTOMATIC'	1	2	SUPER DELUXE AUTOMATIC		0969			
	02	62330-E0201	MARK-'NISSAN FULL AUTOMATIC'	1	2	CUSTOM WAGON AUTOMATIC	1069				
	03	62330-E0301	MARK NISSAN-'FULL AUTOMATIC'	1	2	P-2300 P-DX2400 AUTOMATIC					
	04	63845-18000	CLIP-TUBLAR	2	50	AUTOMATIC					
	501	62330-E3201	MARK-'NISSAN FULL AUTOMATIC'	1	2	SUPER	1069				
	601	62340-E3200	BADGE-RADIATOR GRILLE	1	1	SUPER P-DX2400	1069				
	701	63801-69801	MARK-'DATSUN 2300'	2	2	SUPER PERSONAL		0969			
	801	63801-69800	MARK 'CEDRIC 2300'	2	2	SUPER PERSONAL 2300		0969			
	901	63801-73000	MARK-'CEDRIC'	2	2	DELUXE PERSONAL STD WAGON VAN		0969			
	02	63801-73000	MARK-'CEDRIC'	2	2	ALL EXC SUPER P-DX2400	1069				
	1001	63801-73501	MARK-'DATSUN'	2	2	DIESEL					
	1101	63801-75400	MARK-'DATSUN 2000'	2	2	DELUXE PERSONAL WAGON		0969			

NOTE:

© 1972 NISSAN MOTOR CO., LTD.

REVISED: DECEMBER, 1972
PRINTED IN JAPAN

S	KEY NO.	PART NO.	DESCRIPTION	Q'TY	UNIT PKG FOR DIST.	APPLIED MODEL	APPLIED DATE FROM	APPLIED DATE UP TO	ICA N	ICA F	SUPERSEDED
	1102	63801-75400	MARK-'DATSUN 2000'	2	2	CUSTOM WAGON P-DX2000 VAN-DX	1069				
	1201	63801-E3100	EMBLEM-'DATSUN-2400' SIDE	2	2	SUPER P-DX2400	1069				
	1301	63801-E3101	EMBLEM-'CEDRIC 2400' SIDE	2	2	SUPER P-DX2400	1069				
	1401	63802-73101	MARK-'SIX'	2	2	VAN		0969			
	1501	63802-73301	MARK-'WAGON SIX'	2	2	WAGON					
	1601	63802-73402	MARK-'SUPER SIX'	2	2	SUPER		0969			
	1701	63802-73500	MARK-'DIESEL'	2	2	DIESEL		0969			
	1801	63802-78000	MARK-'DELUXE SIX'	2	2	DELUXE		0969			
	1901	63802-78001	MARK-'PERSONAL SIX'	2	2	PERSONAL		0969			
	2001	79855-E0101	MARK-'NISSAN FULL AUTOMATIC'	1	2	SEDAN AUTOMATIC	1069				
	02	79855-E0301	MARK-'NISSAN FULL AUTOMATIC'	1	2	SEDAN AUTOMATIC	1069				
	2101	84810-69001	MARK-'CUSTOM SIX'	3	2	CUSTOM					
	2201	84810-69002	MARK-'SUPER SIX'	1	2	SUPER					
	2301	84810-69100	MARK-'DELUXE SIX'	1	2	DELUXE		0969			
	02	84810-69100	MARK-'DELUXE SIX'	1	2	VAN-DX	1069				
	2401	84810-69101	MARK-'PERSONAL SIX'	1	2	PERSONAL		0969			
	2501	84810-69201	MARK-'DIESEL'	1	2	DIESEL					
	2601	84810-E3001	MARK-'PERSONAL DELUXE'	3	2	P-DX	1069				
	2701	84820-69300	EMBLEM-'DATSUN 2000'	1	2	DELUXE PERSONAL		0969			
	02	84820-69300	EMBLEM 'DATSUN 2000'	1	2	CUSTOM P-DX2000	1069				
	2801	84820-69301	EMBLEM-'DATSUN'	1	2	DIESEL					
	2901	84820-69800	EMBLEM 'DATSUN 2300'	1	2	SUPER P-2300		0969			

NOTE:

© 1972 NISSAN MOTOR CO., LTD.

PRINTED IN JAPAN

EMBLEM, MARK & ORNAMENT

S	KEY NO.	PART NO.	DESCRIPTION	Q'TY	UNIT PKG FOR DIST.	APPLIED MODEL	APPLIED DATE FROM	APPLIED DATE UP TO	ICA N	ICA F	SUPERSEDED
	3001	84820-69801	EMBLEM 'CEDRIC 2300'	1	2	SUPER P-2300		0969			
	3101	84820-E0100	EMBLEM-'CEDRIC'	1	2	STD DIESEL					
	3201	84820-E3100	EMBLEM-'DATSUN 2400' REAR	1	2	SUPER P-DX2400	1069				
	3301	84820-E3101	EMBLEM-'CEDRIC 2400' REAR	1		SUPER P-DX2400	1069				
	3401	90802-E0500	MARK-'WAGON SIX'	1		WAGON					
	3501	68990-E1300	EMBLEM-INSTRUMENT	1	2	ALL					

NOTE:

© 1972 NISSAN MOTOR CO., LTD.

REVISED: DECEMBER, 1972
PRINTED IN JAPAN

NOTE

Printed in Japan

NISSAN MOTOR CO., LTD.

CYLINDER LOCK & KEY (SEDAN)

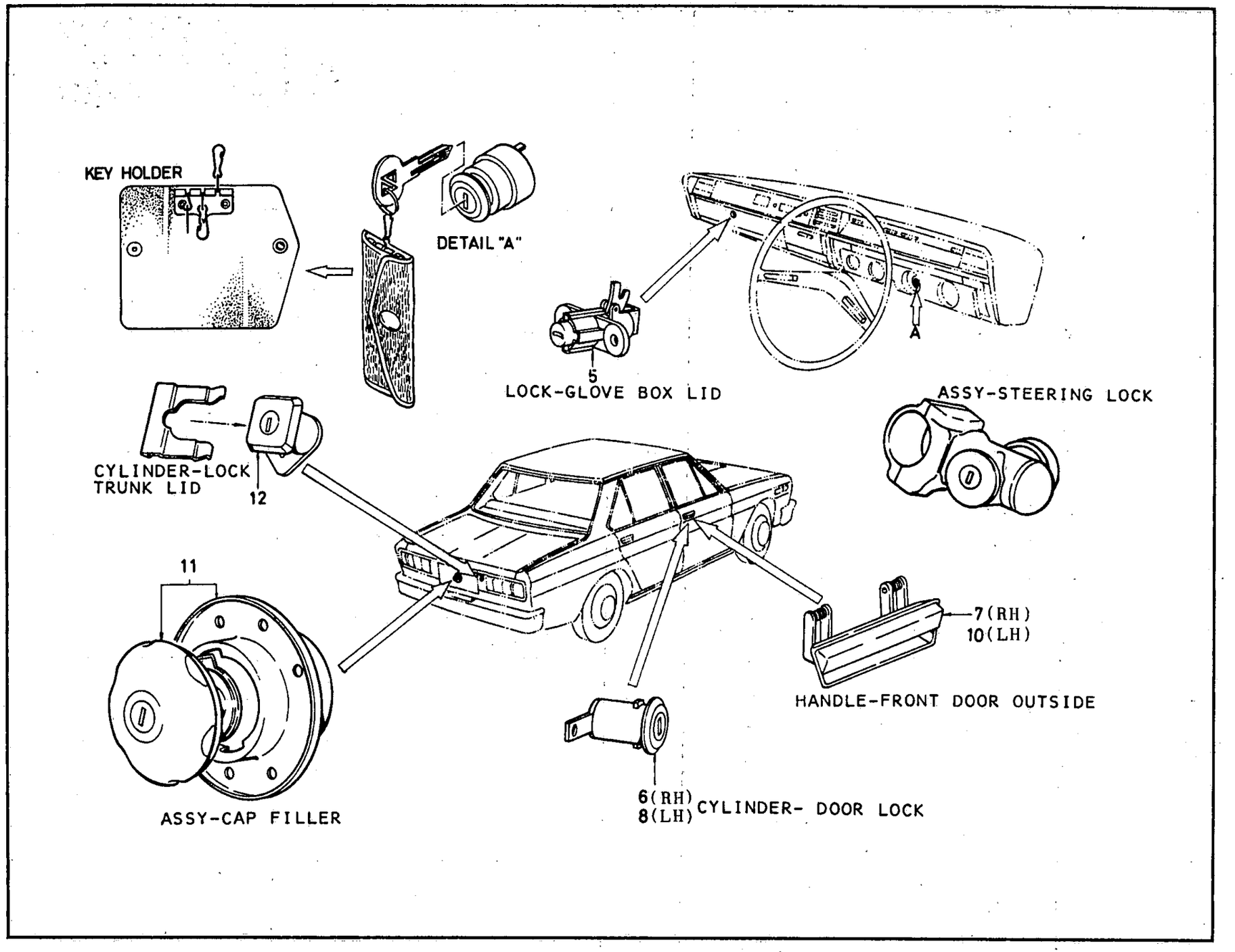

ILLUSTRATION **272-1**

© 1972 NISSAN MOTOR CO., LTD.

REVISED: DECEMBER, 1972

PRINTED IN JAPAN

CYLINDER LOCK & KEY (W & V)

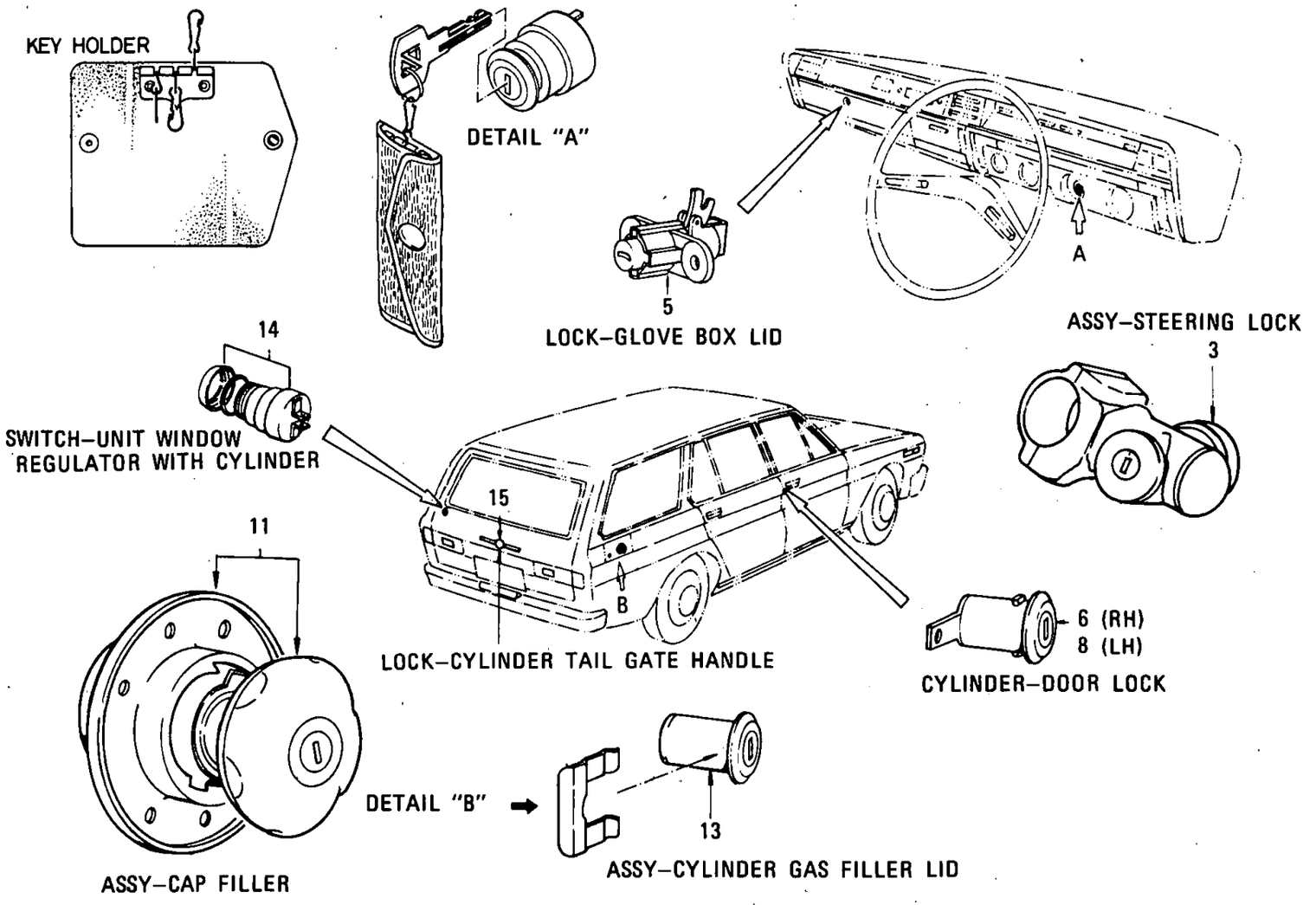

© 1972 NISSAN MOTOR CO., LTD.

PRINTED IN JAPAN

CYLINDER LOCK & KEY

SET-CYLINDER LOCK & KEY

KEY NO.	PART NO.	IGNITION SWITCH	DOOR LOCK RH/LH	FUEL FILLER LID LOCK	GLOVE BOX LOCK	CONSOLE BOX LOCK	STEERING LOCK	TRUNK LID LOCK	TAIL GATE LOCK	
1-02	80010-E0108	○	○	○	○	—	—	○	—	SUPER DELUXE
1-04	80010-E0109	○	○	○	○	○	—	○	—	'69 YEAR MODEL OP SUPER DX
1-05	80010-E0110	—	○	○	○	—	○	○	—	'70 YEAR MODEL SUPER COUSTOM P-DX
	80010-E0111	—	○	○	○	○	○	○	—	
2-02	80010-E0308	○	○	○	○	—	—	○	—	PERSONAL STD
2-04	80010-E0309	—	○	○	○	○	—	○	—	OP PERSONAL STD
2-06	80010-E0310	—	○	○	○	—	○	○	—	
2-08	80010-E0311	○	○	○	○	○	○	○	—	
2-09	80010-E3401	○	○	—	○	—	—	○	—	STANDARD
3-02	80010-E0405	○	○	○	○	—	—	—	○	VAN
3-03	80010-E3501	○	○	○	○	—	—	—	○	VAN-DX
3-05	80010-E0406	—	○	○	○	—	○	—	○	OP VAN
3-06	80010-E0502	—	○	○	○	—	—	—	○	WAGON
3-07	80010-E0503	○	○	○	○	—	○	—	○	OP WAGON
4-02	80010-E0902	○	○	○	○	—	—	○	—	DIESEL
4-03	80010-E3403	○	○	○	○	—	—	○	—	DIESEL

© 1972 NISSAN MOTOR CO., LTD.

REVISED: DECEMBER, 1972

PRINTED IN JAPAN

C

CYLINDER LOCK & KEY

S	KEY NO.	PART NO.	DESCRIPTION	Q'TY	UNIT PKG FOR DIST.	APPLIED MODEL	APPLIED DATE FROM	APPLIED DATE UP TO	ICA N	ICA F	SUPERSEDED
	101	80010-E0104	SET-CYLINDER LOCK & KEY	1	1	SUPER DELUXE					
	02	80010-E0108	CYLINDER LOCK & KEY LESS CONSOLE BOX	1	1	SUPER DELUXE			Y	Y	80010-E0104
	03	80010-E0105	SET-CYLINDER LOCK & KEY WITH CONSOLE BOX	1	1	OP SUPER DELUXE					
	04	80010-E0109	SET-CYLINDER LOCK & KEY WITH CONSOLE BOX	1	1	OP SUPER DELUXE			Y	Y	80010-E0105
	05	80010-E0110	SET-CYLINDER LOCK & KEY WITH STEERING LOCK	1	1	SUPER CUSTOM P-DELUXE	1069		Y	Y	80010-E0106
	06	80010-E0107	SET-CYLINDER LOCK & KEY WITH STEERING LOCK	1	1	OP SUPER DELUXE					
	07	80010-E0107	SET-CYLINDER LOCK & KEY WITH CONSOLE STEERING LOCK	1	1	OP SUPER DELUXE					
	201	80010-E0304	SET-CYLINDER LOCK & KEY	1	1	PERSONAL STANDARD					
	02	80010-E0308	SET-CYLINDER LOCK & KEY LESS CONSOLE BOX	1	1	PERSONAL STANDARD			Y	Y	80010-E0304
	03	80010-E0305	SET-CYLINDER LOCK & KEY WITH CONSOLE BOX	1	1	OP STANDARD PERSONAL					
	04	80010-E0309	SET-CYLINDER LOCK & KEY WITH CONSOLE BOX	1	1	OP PERSONAL			Y	Y	80010-E0305
	05	80010-E0306	SET-CYLINDER LOCK & KEY WITH STEERING LOCK	1	1	OP PERSONAL STANDARD					
	06	80010-E0310	SET-CYLINDER LOCK & KEY WITH STEERING LOCK	1	1	OP PERSONAL STANDARD			Y	Y	80010-E0306
	07	80010-E0307	SET-CYLINDER LOCK & KEY WITH CONSOLE STEERING LOCK	1	1	OP STANDARD PERSONAL					
	08	80010-E0311	SET-CYLINDER LOCK & KEY WITH CONSOLE STEERING LOCK	1	1	OP STANDARD PERSONAL			Y	Y	80010-E0307
	09	80010-E3401	SET-CYLINDER LOCK & KEY	1	1	STANDARD					

NOTE:

REVISED: DECEMBER, 1972
© 1972 NISSAN MOTOR CO., LTD.

PRINTED IN JAPAN

CYLINDER LOCK & KEY

S	KEY NO.	PART NO.	DESCRIPTION	Q'TY	UNIT PKG FOR DIST.	APPLIED MODEL	APPLIED DATE FROM	APPLIED DATE UP TO	ICA N	ICA F	SUPERSEDED
	210	80010-E0108	SET-CYLINDER LOCK & KEY	1	1	STANDARD	1069				
	301	80010-E0402	SET-CYLINDER LOCK & KEY	1	1	WAGON & VAN					
*	02	80010-E0405	SET-CYLINDER LOCK & KEY	1	1	VAN		0969	Y	Y	80010-E0402
	03	80010-E3501	SET-CYLINDER LOCK & KEY	1	1	VAN DELUXE	1069		Y	Y	80010-E0405
	04	80010-E0403	SET-CYLINDER LOCK & KEY WITH STEERING LOCK	1	1	OP VAN					
	05	80010-E0406	SET-CYLINDER LOCK & KEY WITH STEERING LOCK	1	1	OP VAN			Y	Y	80010-E0403
	06	80010-E0502	SET-CYLINDER LOCK & KEY	1	1	WAGON			Y	Y	80010-E0406
*	07	80010-E0503	SET-CYLINDER LOCK & KEY WITH STEERING LOCK	1	1	OP WAGON		0969	Y	Y	80010-E0502
	08	80010-E3502	SET-CYLINDER LOCK & KEY WITH STEERING LOCK	1	1	OP WAGON	1069		Y	Y	80010-E0503
	401	80010-E0901	SET-CYLINDER LOCK & KEY	1	1	DIESEL R DRIVE					
*	02	80010-E0902	SET-CYLINDER LOCK & KEY	1	1	DIESEL		0969	Y	Y	80010-E0901
	03	80010-E3403	SET-CYLINDER LOCK & KEY	1	1	DIESEL	1069		Y	Y	80010-E0902
	501	68630-E0100	LOCK GLOVE BOX LID	1	1	ALL					
	601	80600-E0100	CYLINDER-DOOR LOCK RH	1	1	ALL					
*	02	80600-E0101	CYLINDER-DOOR LOCK RH	1		ALL		0969	N	N	80600-E0100
	03	80600-E0126	SET-CYLINDER DOOR LOCK RH	1	1	ALL		0969	C	N	80600-E0101
	701	80605-E0101	HANDLE-FRONT DOOR OUTSIDE RH	1	1	OP STANDARD PERSONAL			Y	Y	80605-E0100
	801	80601-E0100	CYL-DOOR LOCK LH	1	1	ALL		0969			
*	02	80601-E0101	CYL-DOOR LOCK LH	1		ALL		0969			
	901	80601-E0126	SET-CYLINDER DOOR LOCK LH	1	1	ALL					

NOTE:

© 1972 NISSAN MOTOR CO., LTD.

REVISED: DECEMBER, 1972
PRINTED IN JAPAN

CYLINDER LOCK & KEY

S	KEY NO.	PART NO.	DESCRIPTION	Q'TY	UNIT PKG FOR DIST.	APPLIED MODEL	APPLIED DATE FROM	APPLIED DATE UP TO	ICA N	ICA F	SUPERSEDED
	1001	80606-E0101	HANDL-FRONT DOOR OUTSIDE LH	1	1	DP STANDARD PERSONAL			Y	Y	80606-E0100
	1101	17250-69001	ASSY-CAP FILLER	1	1	ALL					
	1201	84460-E0100	CYLINDER-LOCK TRUNK LID	1	1	ALL EXC W & V					
	1301	84360-73200	ASSY-CYLINDER GAS FILLER LID	1	1	WAGON & VAN					
	1401	25730-E0400	SWITCH-UNIT WINDOW REGULATOR WITH CYLINDER	1	1	WAGON & VAN					
	1501	90600-E0400	LOCK-CYLINDER TAIL GATE HANDLE	1		WAGON & VAN					
	1601	80590-21000	CLIP-RETAINING CYL LOCK	1	10	WAGON & VAN					

NOTE:

© 1972 NISSAN MOTOR CO., LTD.

PRINTED IN JAPAN

NOTE

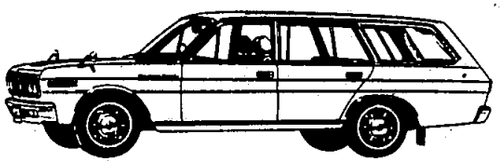

NISSAN MOTOR CO., LTD.

Printed in Japan

NOTE

Printed in Japan

NISSAN MOTOR CO., LTD.

BLANK KEY

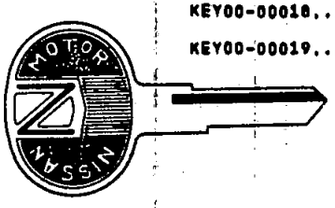

KEY00-00016....T-9
KEY00-00017....T-1
KEY00-00018....T-4
KEY00-00019....T-3

FROM OCT-'67
UP TO SFP-'68

FORMER TYPE GROOVING NO. (UP TO SEP-'68)	1	9	3	4
GROOVING SHAPE (VIEWED FROM BOW SIDE)				
NEW TYPE GROOVING NO. (FROM OCT-'68)	5	6	7	8

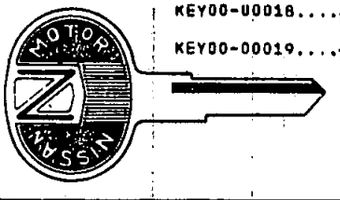

KEY00-00016....T-6
KEY00-00017....T-5
KEY00-00018....T-8
KEY00-00019....T-7

FROM OCT-'68

ILLUSTRATION **273**

© 1972 NISSAN MOTOR CO., LTD.

REVISED: DECEMBER, 1972

PRINTED IN JAPAN

BLANK KEY

S	KEY NO.	PART NO.	DESCRIPTION	Q'TY	UNIT PKG FOR DIST.	APPLIED MODEL	APPLIED DATE FROM	APPLIED DATE UP TO	ICA N	ICA F	SUPERSEDED
	101	KEY00-00016	KEY-BLANK MASTER TYPE 6	1	5	ALL					
	201	KEY00-00017	KEY-BLANK MASTER TYPE 5	1	5	ALL					
	301	KEY00-00018	KEY-BLANK MASTER TYPE 8	1	5	ALL					
	401	KEY00-00019	KEY-BLANK MASTER TYPE 7	1	5	ALL					

NOTE:

© 1972 NISSAN MOTOR CO., LTD.

PRINTED IN JAPAN

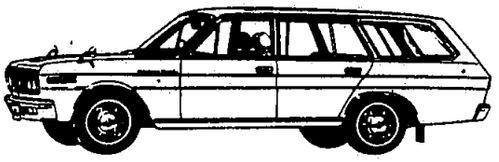

NOTE

NISSAN MOTOR CO., LTD.

Printed in Japan

NOTE

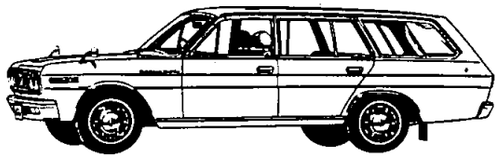

Printed in Japan

NISSAN MOTOR CO., LTD.

TOOL KIT (SEDAN)

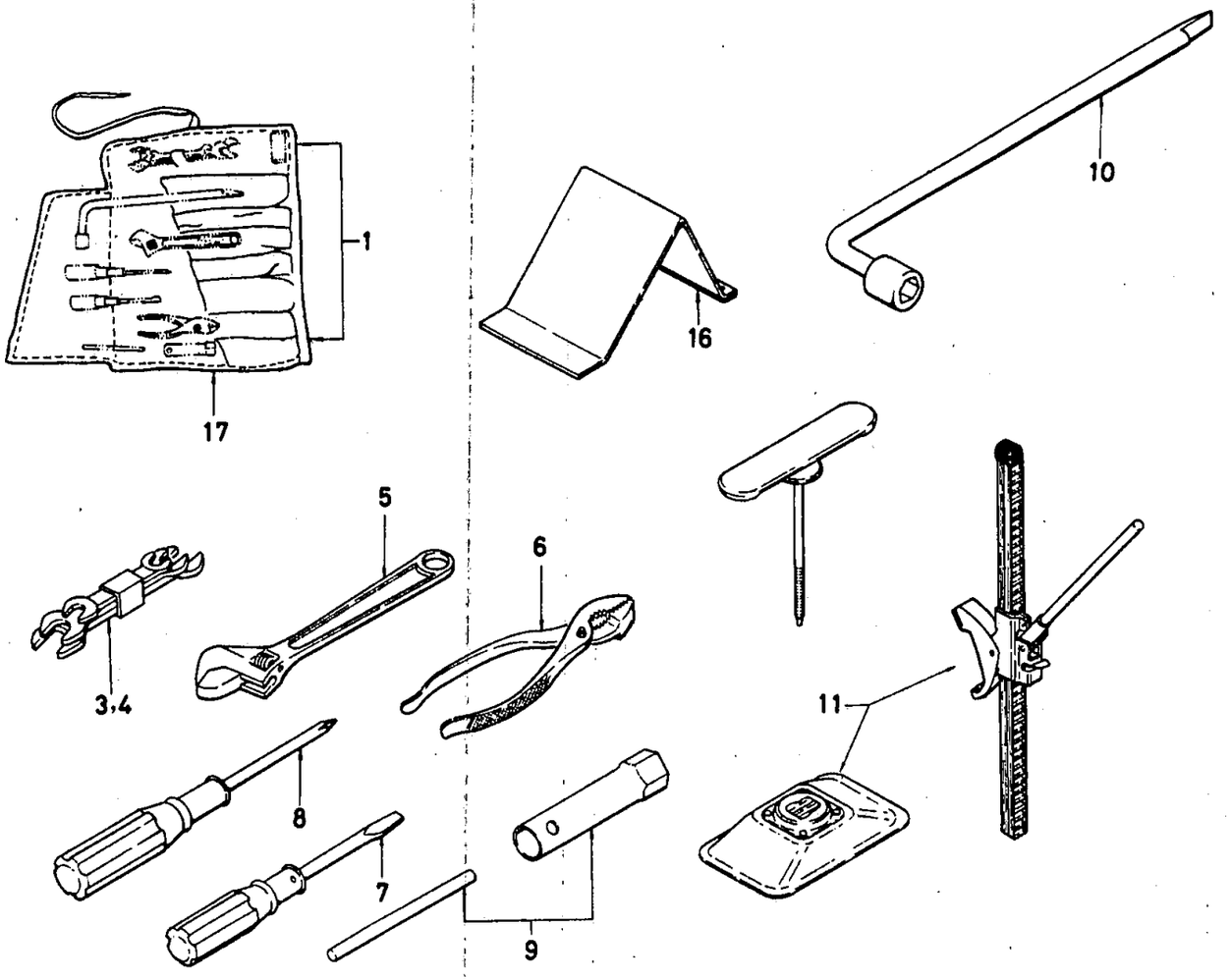

ILLUSTRATION **274-1**

© 1972 NISSAN MOTOR CO., LTD.

REVISED: DECEMBER, 1972

PRINTED IN JAPAN

TOOL KIT (W & V)

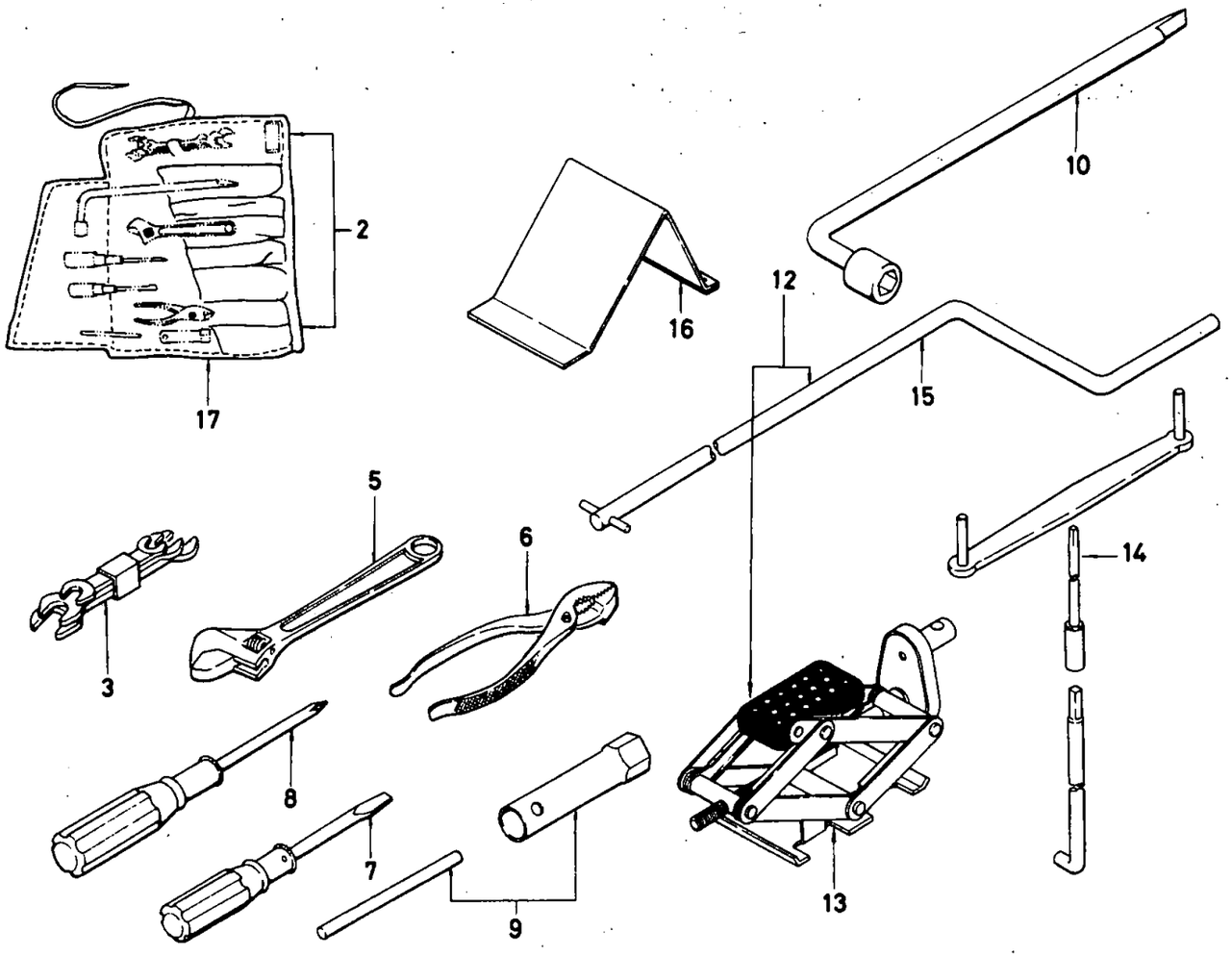

© 1972 NISSAN MOTOR CO., LTD.

PRINTED IN JAPAN

TOOL SETTING

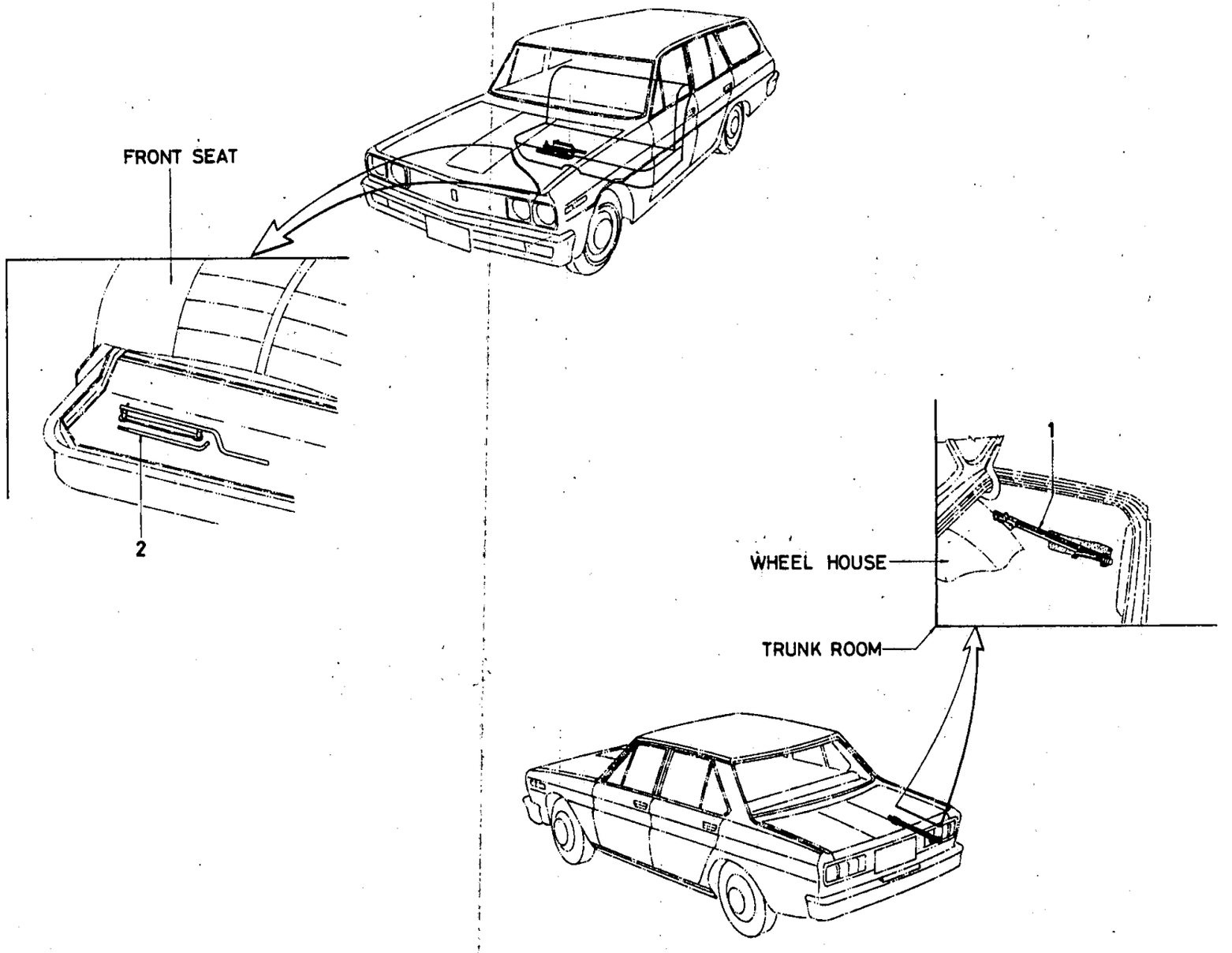

ILLUSTRATION 274-3

© 1972 NISSAN MOTOR CO., LTD.

REVISED: DECEMBER, 1972

PRINTED IN JAPAN

C

TOOL KIT

S	KEY NO.	PART NO.	DESCRIPTION	QTY	UNIT PKG FOR DIST.	APPLIED MODEL	APPLIED DATE FROM	APPLIED DATE UP TO	ICA N	ICA F	SUPERSEDED
*	101	99500-E0101	KIT-TOOL	1		SUPER P-2300 P-DX2400					
*	02	99500-E0201	KIT-TOOL	1		P-2000 P-DX2000 CUSTOM STD					
*	03	99500-E0901	KIT-TOOL	1		DIESEL					
*	201	99500-69600	KIT-TOOL	1		WAGON & VAN					
*	301	99512-78100	SPANNER SET	1		ALL					
*	401	99505-E0100	SPANNER SET	1		DIESEL					
*	501	99520-73000	MONKEY WRENCH	1		ALL					
*	601	99525-73000	PLIER	1		ALL					
*	701	99530-73000	DRIVER MINUS	1		ALL					
*	801	99535-73000	DRIVER PLUS	1		ALL					
*	901	99540-73400	SPARK PLUG WRENCH	1		ALL					
*	1001	99545-73000	WHEEL NUT WRENCH	1		ALL					
*	1101	99550-E0100	SET-JACK	1		ALL					
*	1201	99550-69600	SET-JACK	1		WAGON & VAN					
*	1301	99551-73200	BODY-JACK	1		WAGON & VAN					
*	1401	99553-73200	HANDLE-JACK	1		WAGON & VAN					
*	1501	99554-69600	ROD-JACK	1		WAGON & VAN					
*	1601	99558-73000	TIRE STOPPER	2		ALL					
*	1701	99595-73000	TOOL BAG	1		ALL					
	1801	99608-78000	BRACKET-JACK CLAMP	1	1	SEDAN					

NOTE:

© 1972 NISSAN MOTOR CO., LTD.

PRINTED IN JAPAN

NOTE

NISSAN MOTOR CO., LTD.

Printed in Japan

NOTE

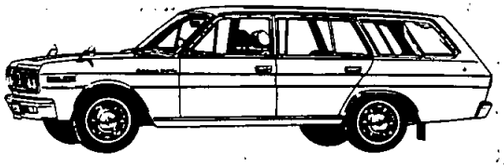

Printed in Japan

NISSAN MOTOR CO., LTD.

LONG LIFE COOLANT & N·C·S SEALER

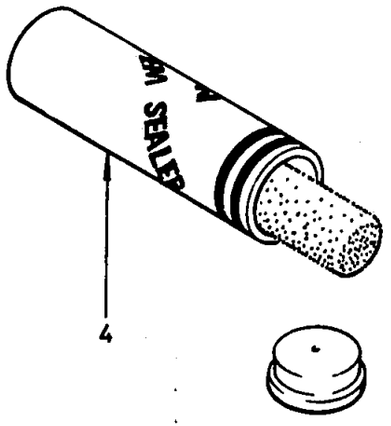

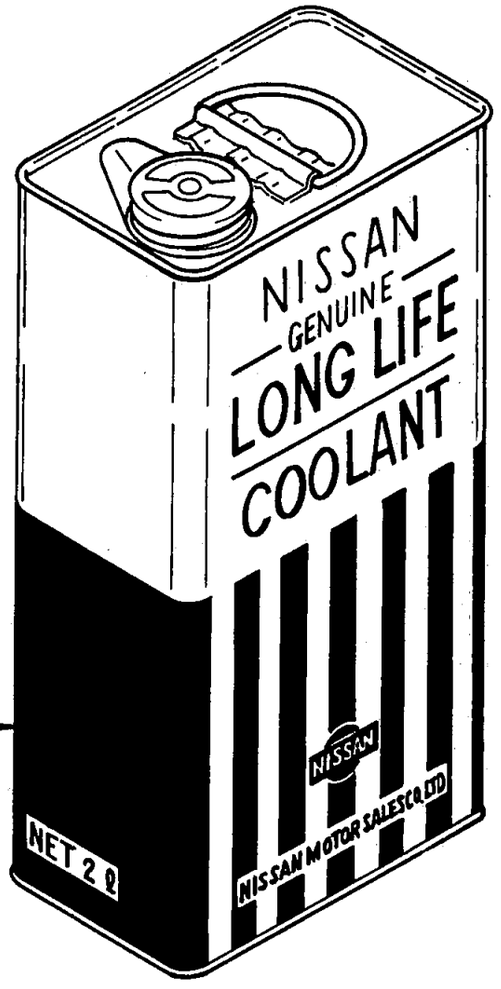

1(2 LITER)
2(4 LITER)
3(18 LITER)

ILLUSTRATION **275**

© 1972 NISSAN MOTOR CO., LTD.

REVISED: DECEMBER, 1972

PRINTED IN JAPAN

LONG LIFE COOLANT & N.C.S.SEALER

S	KEY NO.	PART NO.	DESCRIPTION	QTY	UNIT PKG FOR DIST.	APPLIED MODEL	APPLIED DATE FROM	APPLIED DATE UP TO	ICA N	ICA F	SUPERSEDED
*	101	SBNLL-C0001	N.L.L COOLANT-2LITER (0.44 US GALON)	1		ALL					
*	201	SBNLL-C0002	N.L.L COOLANT-4LITER (0.88 US GALON)	1		ALL					
*	301	SBNLL-C0003	N.L.L COOLANT-18LITER (3.96 US GALON)	1		ALL					
	401	10125-62200	N.C.S SEALER-1 CARTON (96PIECES)	1	1	ALL					

NOTE:

© 1972 NISSAN MOTOR CO., LTD.

PRINTED IN JAPAN

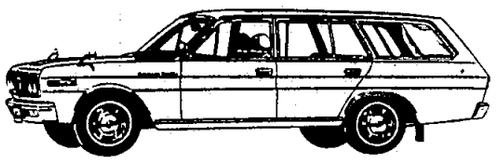

NOTE

NISSAN MOTOR CO., LTD.

Printed in Japan

NOTE

Printed in Japan

NISSAN MOTOR CO., LTD.

TOUCH-UP PAINT

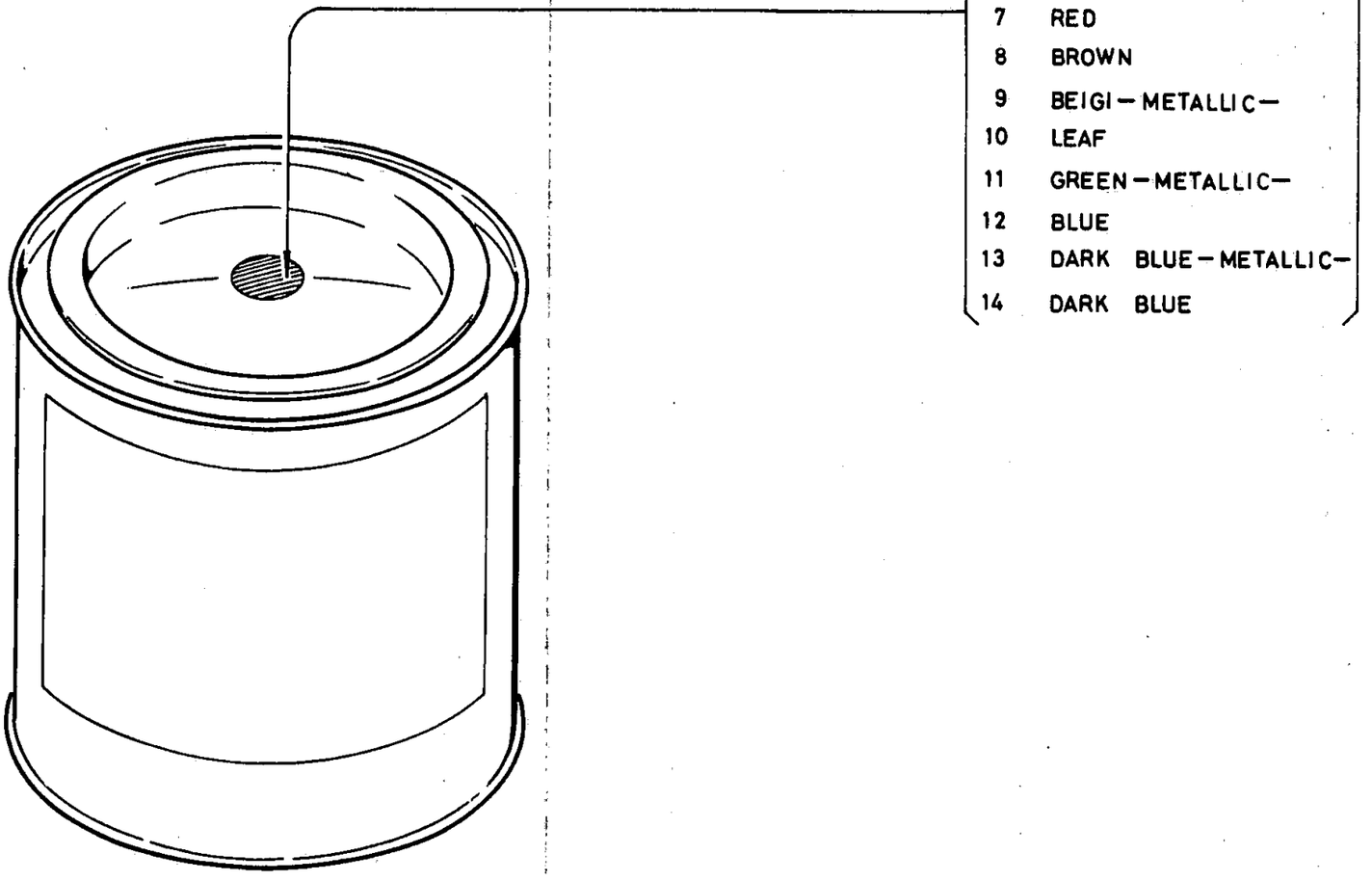

ILLUSTRATION **276**

© 1972 NISSAN MOTOR CO., LTD.

REVISED: DECEMBER, 1972

PRINTED IN JAPAN

C

TOUCH-UP PAINT

S	KEY NO.	PART NO.	DESCRIPTION	QTY.	UNIT PKG FOR DIST.	APPLIED MODEL	APPLIED DATE FROM	APPLIED DATE UP TO	ICA N	ICA F	SUPERSEDED
	101	PAINT-DN505	PAINT-BLACK #505 1KG	1	1	ALL EXC WAGON & VAN					
	201	PAINT-DN802	PAINT-DARK GRAY (METALLIC) #802(1KG)	1	1	ALL					
	301	PAINT-DN801	PAINT-GRAY (METALLIC) #801	1		ALL EXC WAGON					
	401	PAINT-DN518	PAINT-GRAY #518(1KG)	1	5	ALL					
	501	PAINT-DN637	PAINT-WHITE #637(1KG)	1	1	ALL					
	601	PAINT-DN634	PAINT-RED METALLIC #634(1KG)	1	1	ALL					
	701	PAINT-DN814	PAINT-RED #814(1KG)	1	1	ALL EXC WAGON					
	801	PAINT-DN535	PAINT-BROWN #535(1KG)	1	1	ALL					
	901	PAINT-DN608	PAINT-BEIGE (METALLIC) #608(1KG)	1	1	ALL EXC WAGON					
	1001	PAINT-DN803	PAINT-LEAF #803	1	1	ALL EXC WAGON					
	1101	PAINT-DN804	PAINT-GREEN (METALLIC) #804(1KG)	1	1	ALL					
	1201	PAINT-DN567	PAINT-BLUE #567(1KG)	1	1	ALL EXC WAGON					
	1301	PAINT-DN806	PAINT-DARK BLUE (METALLIC) #806(1KG)	1	1	ALL					
	1401	PAINT-DN805	PAINT-DARK BLUE #805(1KG)	1	1	ALL					

NOTE:

© 1972 NISSAN MOTOR CO., LTD.

PRINTED IN JAPAN

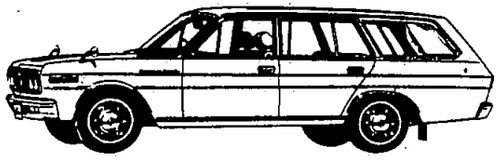

NOTE

NISSAN MOTOR CO., LTD.

Printed in Japan

NOTE

Printed in Japan

NISSAN MOTOR CO., LTD.

MODEL NO. PLATE

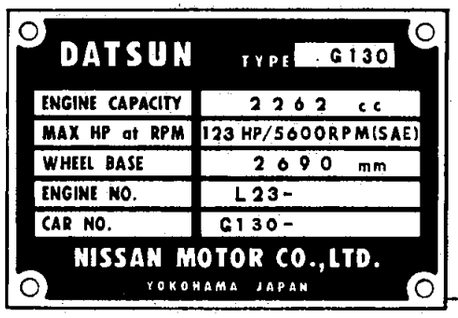

1

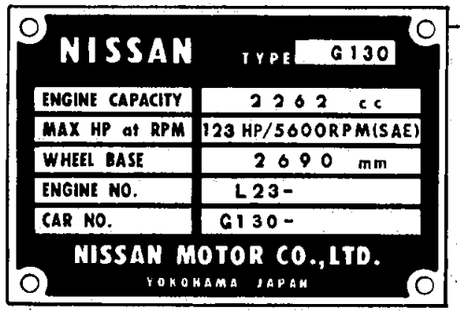

2

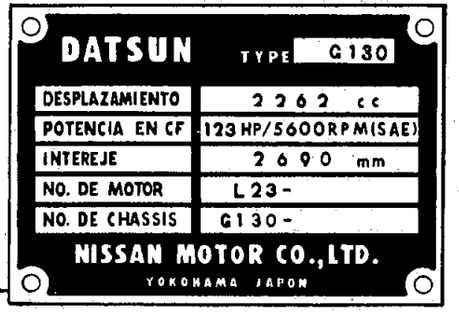

3

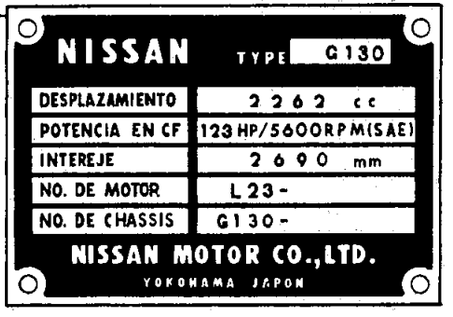

4

© 1972 NISSAN MOTOR CO., LTD.

REVISED: DECEMBER, 1972

PRINTED IN JAPAN

MODEL NO. PLATE

S	KEY NO.	PART NO.	DESCRIPTION	QTY	UNIT PKG FOR DIST.	APPLIED MODEL	APPLIED DATE FROM	APPLIED DATE UP TO	ICA N	ICA F	SUPERSEDED
	101	- 96901-69800	PLATE-MODEL NUMBER (ENGLISH DATSUN)	1	1	ALL					
	201	- 96901-69801	PLATE-MODEL NUMBER (ENGLISH NISSAN)	1	1	ALL					
	301	- 96901-69802	PLATE-MODEL NUMBER (SPANISH DATSUN)	1	1	ALL					
	401	- 96901-69803	PLATE-MODEL NUMBER (SPANISH NISSAN)	1	1	ALL					

NOTE:

© 1972 NISSAN MOTOR CO., LTD.

PRINTED IN JAPAN

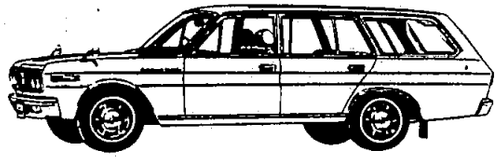

NOTE

NISSAN MOTOR CO., LTD.

Printed in Japan

PART NO. INDEX

PART NUMBER INDEX

PUB. NO. C-0020

(CLASSIFIED BY PART NO.)

PART NO.	PAGE
A7515-C1100	32- - 1
	133- - 2
	133-A- 1
	133-A- 1
A7515-H1800	12- - 2
	52- - 2
	133- - 1

PART NO.	PAGE
B1510-E0100	135- - 3
B5330-E0101	235- - 5
B7460-89910	150- - 1
	150- - 2

PART NO.	PAGE
C4431-78101	177-A- 3

© 1972 NISSAN MOTOR CO., LTD.

REVISED: DECEMBER, 1972

B-C

PRINTED IN JAPAN

PART NUMBER INDEX

(CLASSIFIED BY PART NO.)

PUB. NO. C-0020

PART NO.	PAGE
DKK95-39801	145-C- 1
DKK96-00562	145-C- 1
DKK96-00567	145-C- 1
DKK96-00568	145-C- 1
DKK96-00569	145-C- 1
DKK96-11085	145-C- 1
DKK96-21420	145-C- 1
DKK96-21422	145-C- 1
DKK96-30255	145-C- 1
DKK96-31050	145-C- 1
DKK96-31630	145-C- 1
DKK96-31873	145-C- 1
DKK96-33370	145-C- 1
DKK96-34620	145-C- 1
DK930-00470	145-C- 5
DK930-12870	145-C- 5
DK930-25100	145-C- 3
	145-C- 3
DK930-42220	145-C- 6
DK931-05610	145-C- 5
DK931-22940	145-C- 1
DK931-30530	145-C- 1
DK931-40212	145-C- 6
DK933-01810	145-C- 6
DK933-01842	145-C- 6
DK933-11510	145-C- 6
DK933-11810	145-C- 6
DK933-11920	145-C- 6
DK933-11930	145-C- 6
DK940-29092	145-C- 1
DK940-29102	145-C- 1
DK940-33020	145-C- 2
	145-C- 4
DK940-34090	145-C- 4
DK940-34100	145-C- 4
DK940-34840	145-C- 4
DK940-34850	145-C- 4
DK940-40120	145-C- 4
DK940-40452	145-C- 5
DK941-03020	145-C- 1
DK950-22480	145-C- 2
DK950-41010	145-C- 1
DK953-02692	145-C- 2
DK953-03562	145-C- 4
DK953-04852	145-C- 2
DK953-04882	145-C- 2
DK953-04892	145-C- 2
DK953-05402	145-C- 2
DK953-10672	145-C- 2
DK953-10682	145-C- 2
DK953-10692	145-C- 2
DK953-13910	145-C- 2
DK953-15302	145-C- 2
DK953-15332	145-C- 2
DK953-20020	145-C- 3
	145-C- 6
DK953-20110	145-C- 5
DK953-20990	145-C- 3
DK953-22170	145-C- 4
DK953-26110	145-C- 3
DK953-26290	145-C- 3
DK953-26300	145-C- 3
DK953-26640	145-C- 4
DK953-26650	145-C- 4
DK953-40260	145-C- 2
DK956-04170	145-C- 2
G4191-89911	251-A- 3
G4919-89901	222- - 2
	251-A- 3
G4919-89911	222- - 2
G4919-89921	222- - 2
	251-A- 3
G4919-89931	222- - 2
	251-A- 3

© 1972 NISSAN MOTOR CO., LTD.

REVISED: DECEMBER, 1972

PRINTED IN JAPAN

PART NUMBER INDEX

PUB. NO. C-0020

(CLASSIFIED BY PART NO.)

PART NO.	PAGE
H0202-E0101	228- - 4
	256- - 4
	256- - 4
H0202-E3201	228- - 1
	228- - 5
	256- - 4
H0203-E0101	228- - 4
H0203-E3201	228- - 1
	228- - 5
	256- - 4
H0400-73002	228- - 3
	256- - 3
H2202-E0101	231- - 4
H2202-E0401	259- - 4
H2203-E0101	231- - 4
H2203-E0401	259- - 4
H6810-08990	268- - 1
H6820-E0100	239- - 2
	268- - 1
H8131-73201	266- - 2
H8820-E0100	239- - 2
H8820-E0101	239- - 3
	268- - 2
H8820-E0400	268- - 2

PART NO.	PAGE
KEY00-00016	273- - 1
KEY00-00017	273- - 1
KEY00-00018	273- - 1
KEY00-00019	273- - 1

PART NO.	PAGE
OIL07-00004	172- - 6

© 1972 NISSAN MOTOR CO., LTD.

REVISED: DECEMBER, 1972

PRINTED IN JAPAN

B-C

PART NUMBER INDEX

(CLASSIFIED BY PART NO.)

PUB. NO. C-0020

PART NO.	PAGE
PAINT-DN505	276- - 1
PAINT-DN518	276- - 1
PAINT-DN535	276- - 1
PAINT-DN567	276- - 1
PAINT-DN608	276- - 1
PAINT-DN634	276- - 1
PAINT-DN637	276- - 1
PAINT-DN801	276- - 1
PAINT-DN802	276- - 1
PAINT-DN803	276- - 1
PAINT-DN804	276- - 1
PAINT-DN805	276- - 1
PAINT-DN806	276- - 1
PAINT-DN814	276- - 1
SBNLL-C0001	275- - 1
SBNLL-C0002	275- - 1
SBNLL-C0003	275- - 1
x7010-73026	73- - 2
x7010-73425	33- - 2

B-C

© 1972 NISSAN MOTOR CO., LTD.

REVISED: DECEMBER, 1972

PRINTED IN JAPAN

PART NUMBER INDEX

PUB. NO. C-0020

(CLASSIFIED BY PART NO.)

STANDARD PARTS

PART NO.	PAGE
00111-41610	27- - 1
	122-A- 2
	122-B- 3
00111-42010	29- - 1
	69- - 1
	122-A- 1
00111-42210	25- - 3
	69- - 1
00111-42510	27- - 1
	27- - 2
00111-43010	27- - 2
00111-44010	69- - 1
00111-52510	29- - 2
00111-52810	25- - 4
00111-53010	192- - 3
00111-54810	145-A- 1
	146-A- 1
00111-62810	194- - 3
00111-63010	64- - 4
00114-41210	71- - 1
	134- - 3
	262- - 3
00114-41262	214- - 1
	244- - 1
00114-41410	191- - 2
	191-A- 2
00114-41610	64- - 4
	70- - 8
	134- - 3
	135- - 3
	136- - 3
	144-A- 2
	213- - 1
	243- - 1
00114-41662	135- - 3
	135- - 3
	212- - 2
	214- - 1
	242- - 2
	244- - 1
00114-41810	122-B- 1
00114-42010	67- - 1
	133- - 2
	133-A- 2
00114-42062	214- - 1
	244- - 1
00114-42510	134- - 1
00114-42565	213- - 3
	243- - 3
00114-43010	25- - 4
	191- - 2
00114-43510	194- - 1
00114-43810	64- - 2
00114-45010	131- - 4
00114-51410	31- - 1
	191- - 5
	191-A- 4
00114-51610	131- - 2
	131- - 3
	131- - 3
	131- - 4
	131-A- 1
	131-A- 2
	131-A- 2
	131-A- 3
	145- - 1
	146- - 1
	184- - 7
	191- - 3
	191-A- 2
00114-51810	131- - 2
	131-A- 1
	184- - 7
00114-52010	64- - 2
	64- - 2
	144- - 1
	144-A- 1
	144-B- 1
	144-C- 1
	182- - 5
	184- - 6
	217- - 1
	217-A- 1
	247- - 1
	247-A- 1
00114-52210	145-C- 4
	250- - 1
	266- - 1
	267- - 1
	267- - 1
00114-52510	131- - 2
	131-A- 1
	182- - 5
	255- - 1
	263- - 1
00114-52562	212- - 4
00114-52562	212- - 4
	242- - 3
00114-52810	131- - 4
	131-A- 1
00114-53210	131- - 3
	131-A- 2
00114-53510	74- - 2
	131- - 3
	145-A- 2
	146-A- 2
00114-54510	64- - 3
00114-54810	64- - 3
00114-55510	74- - 2
	145-A- 2
	146-A- 2
00114-56510	131- - 4
00114-57010	131-A- 2
00114-61810	136- - 2
00114-62010	64- - 2
	162- - 2
	176- - 4
	176-A- 4
	176-A- 4
	177- - 4
	177-A- 4
	178- - 3
	178-A- 3
00114-63010	176-A- 4
	176-A- 4
	177-A- 4
00114-66510	136- - 2
00114-72210	250- - 1
	267- - 1
00121-42210	23- - 3
00121-44210	23- - 3
00121-52510	34- - 2
00121-62210	136- - 1
00124-41410	34- - 2
	194- - 2
00124-41610	66- - 4
00124-42010	74- - 2
00124-42210	74- - 2
	145-A- 2
	146-A- 2
00124-42510	178- - 2
	178-A- 2
00124-44010	67- - 1
00124-51610	146-A- 1
00124-52010	182- - 6
00124-52210	161- - 1

© 1972 NISSAN MOTOR CO., LTD.

REVISED: DECEMBER, 1972

PRINTED IN JAPAN

B-C

PART NUMBER INDEX

(CLASSIFIED BY PART NO.)

PART NO.	PAGE
00124-52210	192-A- 4
	192-B- 5
00124-52510	145-A- 2
	146-A- 2
	179- - 3
	179- - 3
00124-62210	136- - 1
	136- - 2
	179- - 3
00124-62510	184- - 4
00124-63510	124-E- 2
	182- - 1
00124-74010	181-A- 4
00124-75510	182- - 5
00131-41810	23- - 2
00131-57000	67- - 3
00131-62210	122-A- 3
	145- - 1
	146- - 1
00131-63010	172- - 6
00131-66010	165- - 3
	168- - 4
00131-86500	64- - 1
00134-51810	122-B- 3
00134-52010	3- - 4
	145- - 4
	145-A- 1
	146- - 3
	146-A- 1
00134-52510	122-B- 4
	122-B- 4
00134-52800	66- - 3
00134-53010	122-B- 4
00134-62210	66- - 4
00134-62510	26- - 3
	66- - 5
00134-64010	172- - 6
00134-64510	181-A- 4
	182- - 1
00134-66510	165- - 4
	168- - 4
00134-73810	181- - 3
00144-52010	135- - 2
	213- - 4
	216- - 1
	216- - 1
	216-A- 1
	216-A- 1
	228- - 4
	231- - 4
00144-52010	234- - 1
	243- - 4
	246- - 1
	246- - 2
	246-A- 1
	246-A- 1
	256- - 3
	259- - 4
00144-52510	216- - 1
	246- - 1
00144-53010	132-A- 2
	202- - 5
	216-A- 1
	246-A- 1
00144-62010	213- - 4
	243- - 3
00154-64010	136- - 3
00154-83010	212- - 4
	234- - 3
	242- - 3
00214-41410	28- - 1
00214-51400	28- - 1
00214-51410	28- - 1
	33-A- 1
00214-51610	28- - 1
00214-52510	68- - 2
00214-52800	28- - 1
	28- - 1
	68- - 1
	68- - 1
	68- - 2
00214-52810	28- - 1
	28- - 1
	68- - 1
	68- - 1
00214-53010	87- - 1
00214-53200	25- - 2
00214-54010	65- - 1
	68- - 1
00214-56000	68- - 1
00214-56500	68- - 1
00214-62210	145-A- 3
	146-A- 3
00214-62810	64- - 1
00217-52810	25- - 2
00224-44010	23- - 1
00224-58000	25- - 1
00224-58010	23- - 1
	25- - 1
	34- - 1
00224-62210	23- - 1
00227-53010	25- - 1
00227-53210	25- - 1
	25- - 2
00253-52510	64- - 1
00264-52010	181- - 2
	181-A- 3
00264-63000	65- - 1
00264-63500	65- - 1
00310-60610	178- - 1
	178-A- 1
00310-60810	237- - 2
00310-60814	204- - 2
00310-61010	237- - 2
00310-61012	237- - 2
00310-61210	237- - 1
00310-61814	204- - 2
00311-41210	122-A- 1
00314-00642	217- - 3
	217-A- 3
	247- - 4
	247-A- 3
00314-00810	235- - 5
00314-01010	134- - 1
	134- - 3
	191- - 4
	191-A- 3
00314-01014	144- - 2
	144- - 3
	144-A- 3
	144-B- 2
	144-C- 2
	214- - 1
	244- - 2
00314-01018	263- - 1
	264- - 1
00314-01210	134- - 2
	134- - 3
	144- - 3
	144-A- 2
	198- - 3
00314-01214	150- - 1
	229- - 3
	232- - 4
	234- - 1
	257- - 3
	260- - 4
00314-01410	151- - 1
	151-A- 2
	151-A- 2

© 1972 NISSAN MOTOR CO., LTD.

REVISED: DECEMBER, 1972

PRINTED IN JAPAN

B-C

PART NUMBER INDEX

PUB. NO. C-0020

(CLASSIFIED BY PART NO.)

PART NO.	PAGE
00314-01610	254- - 1
00314-02214	134- - 4
00314-02514	142- - 3
00314-40810	213- - 3
	243- - 3
	262- - 3
	262- - 3
00314-40812	213- - 3
	243- - 3
	262- - 3
	262- - 3
00314-41010	229- - 4
	257- - 4
00314-41012	229- - 4
	257- - 4
00314-41210	122-C- 1
	228- - 2
	256- - 2
00314-41212	122-C- 1
	228- - 2
	256- - 2
00314-41214	214- - 1
	228- - 4
	229- - 5
	231- - 2
	231- - 2
	231- - 2
	232- - 4
	244- - 1
	256- - 4
	257- - 5
	259- - 2
	259- - 2
	259- - 2
	260- - 4
	262- - 3
	262- - 3
	263- - 2
	263- - 3
	263- - 3
00314-41410	68- - 3
00314-41610	68- - 2
	213- - 2
	228- - 2
	229- - 1
	232- - 1
	243- - 1
	256- - 2
	257- - 1
	260- - 1
00314-41610	262- - 3
00314-41614	212- - 1
	214- - 1
	214- - 1
	242- - 1
	244- - 1
	244- - 1
	262- - 3
00314-41642	191- - 2
	216- - 2
	216-A- 2
	246- - 3
	246-A- 2
00314-41660	234- - 1
00314-41810	178-A- 2
00314-41814	149- - 2
	176- - 3
	176-A- 3
	177- - 3
	177-A- 3
	178- - 2
	202- - 6
00314-42010	122-B- 1
	123-C- 3
	149- - 2
00314-42012	122-B- 1
	123-C- 3
	149- - 2
00314-42014	135- - 4
00314-42212	145-C- 3
	145-C- 3
00314-44015	262- - 2
00314-44510	228- - 2
	256- - 2
00314-44515	231- - 2
	259- - 2
00314-51210	250- - 1
00314-51412	250- - 1
00314-51610	235- - 4
	235-A- 2
	235-B- 1
	236-A- 2
	265- - 1
00314-51619	263- - 1
00314-52014	263- - 3
00314-52520	236- - 5
	236-A- 2
00319-01200	194- - 3
00320-61210	237- - 2
00320-80810	228- - 2
00320-80810	256- - 1
00320-81220	237- - 2
00324-40810	229- - 1
	232- - 1
	257- - 1
	260- - 1
00324-41210	235- - 6
	238- - 2
00324-41212	235- - 6
	238- - 2
00324-41610	74- - 3
00324-41612	74- - 3
00324-42012	229- - 1
	232- - 1
	257- - 1
	260- - 1
00324-51210	229- - 3
	232- - 3
	257- - 3
	260- - 3
00324-51610	264- - 1
00324-51612	264- - 1
00324-53010	229- - 3
	232- - 3
	257- - 3
	260- - 3
00330-61410	204- - 2
00330-61412	204- - 2
00331-45012	114- - 4
00334-01620	262- - 1
00334-41610	253- - 4
00334-51842	239- - 1
00334-52520	235- - 4
	236- - 5
	236-A- 2
00334-53042	239- - 1
00344-41210	181- - 3
00369-01610	191- - 3
	191-A- 2
00369-41214	178- - 2
00369-41615	213- - 2
	243- - 2
00369-41814	191- - 2
00369-52014	220- - 1
00414-01210	255- - 1
00414-01610	144- - 1
	144-A- 1
	144-B- 1
	144-C- 1
	212- - 4

© 1972 NISSAN MOTOR CO., LTD.

REVISED: DECEMBER, 1972

PRINTED IN JAPAN

PART NUMBER INDEX

(CLASSIFIED BY PART NO.)

PUB. NO. C-0020

PART NO.	PAGE
00414-01610	242- - 4
00414-40810	229- - 1
	232- - 2
	257- - 2
	260- - 2
00414-40812	229- - 2
	232- - 2
	257- - 2
	260- - 2
00414-41242	215- - 3
	245- - 3
00414-41610	216- - 1
	216-A- 1
	219- - 2
	229- - 4
	246- - 2
	246-A- 1
	249- - 2
	257- - 4
00414-43042	264- - 2
00420-60810	229- - 2
00420-80810	232- - 2
	257- - 2
	260- - 2
00424-01210	229- - 4
	232- - 4
	257- - 4
	260- - 4
00424-01212	229- - 4
	232- - 4
	257- - 4
	260- - 4
00424-41610	262- - 2
00434-01620	219- - 2
	219- - 3
	249- - 2
	249- - 3
	249- - 3
	266- - 2
00510-61010	150- - 1
	226- - 2
00510-61310	215- - 2
	245- - 2
00510-61642	217- - 3
	217-A- 3
	247- - 4
	247-A- 2
00510-81310	215- - 1
	220- - 2
	234- - 3
00510-81310	245- - 1
	249- - 2
	250- - 3
00510-81312	215- - 1
	220- - 2
	234- - 3
	245- - 1
	249- - 2
	250- - 3
00510-81910	235- - 6
00511-01010	142- - 3
	142- - 4
	142- - 4
	145- - 2
	145- - 6
	145-A- 3
	145-B- 2
	145-B- 5
	156- - 1
	213- - 3
	215- - 1
	215- - 2
	217- - 4
	226- - 1
	243- - 2
	245- - 1
	245- - 2
	247- - 5
	247-A- 3
00511-01012	133-A- 1
	142- - 3
	142- - 4
	142- - 4
	145- - 2
	145- - 6
	145-A- 3
	145-B- 3
	145-B- 6
	156- - 1
	213- - 3
	215- - 1
	215- - 2
	217- - 4
	217-A- 3
	217-A- 3
	226- - 1
	243- - 3
	245- - 1
	245- - 2
	247- - 5
00511-01012	247-A- 3
00511-01310	132- - 2
	144- - 3
	144-A- 2
	144-B- 2
	144-C- 2
	220- - 1
	222- - 2
	249- - 1
	250- - 2
	251-A- 2
00511-01312	132-A- 1
00511-01342	216- - 2
	246- - 2
00511-01610	134- - 1
	134- - 1
	156- - 1
	217- - 1
	217-A- 1
	247- - 2
	247-A- 1
	266- - 2
00511-01642	143- - 2
	143-A- 2
	217- - 2
	217-A- 2
	247- - 3
	247-A- 2
00511-01942	216- - 2
	246- - 3
00511-02620	237- - 1
00511-41910	132- - 2
00513-60720	237- - 1
00513-61020	235- - 6
00513-81310	234- - 3
00514-01010	144- - 4
	144-A- 3
	144-B- 2
	144-C- 2
	213- - 1
	214- - 1
	214- - 1
	243- - 1
	244- - 1
	244- - 1
00514-01310	213- - 3
	217- - 3
	217- - 3
	217- - 3
	217-A- 3

© 1972 NISSAN MOTOR CO., LTD.

REVISED: DECEMBER, 1972

PRINTED IN JAPAN

B-C

PART NUMBER INDEX

PUB. NO. C-0020

(CLASSIFIED BY PART NO.)

PART NO.	PAGE
00514-01310	217-A- 3
	217-A- 3
	243- - 3
	247- - 4
	247- - 4
	247-A- 3
	247-A- 3
	247-A- 3
00514-01610	144- - 3
	144-A- 2
	144-B- 1
	144-C- 1
	254- - 1
00514-41310	122-A- 2
	122-A- 2
	122-B- 3
	122-C- 3
00520-62610	221- - 4
	221- - 6
	222- - 1
	251-A- 1
00520-81310	253- - 3
	264- - 2
00520-81910	235-A- 2
	235-B- 1
00521-01310	253- - 4
	253- - 4
	264- - 2
00521-01642	144- - 3
	144-A- 3
	217- - 3
	222- - 1
	247- - 3
	247-A- 2
00521-02210	263- - 3
00521-02212	263- - 3
00530-61320	235- - 6
	249- - 2
	253- - 3
	253- - 3
	253- - 4
	253- - 5
	264- - 1
	264- - 2
	264- - 2
00530-61620	224- - 2
	253- - 2
00530-61642	224- - 3
	253- - 5
00530-81010	234- - 2
00530-81320	251-A- 2
	253- - 2
00530-81342	224- - 3
00530-82620	253- - 3
	264- - 2
00531-01320	236- - 5
	251-A- 2
	264- - 2
00531-01642	217- - 1
	217-A- 1
	247- - 2
	247-A- 1
00541-01010	254- - 1
00543-81620	224- - 2
	253- - 2
00610-41600	183- - 2
00610-41610	183- - 2
00660-40810	228- - 3
	231- - 3
	256- - 3
	259- - 3
00721-11310	135- - 4
00721-11610	28- - 2
00721-12200	144-A- 2
	144-B- 2
	144-C- 2
00911-01610	217- - 1
	217-A- 1
00911-10610	237- - 2
	264- - 1
00911-10810	134- - 2
	217- - 2
	217-A- 2
	247- - 2
	247-A- 2
00911-11510	192- - 3
00911-14010	143- - 3
	143-A- 2
	191- - 3
	191-A- 2
	194- - 3
	217- - 1
	217- - 2
	217- - 2
	217- - 3
	217- - 3
	217-A- 1
	217-A- 1
	217-A- 2
	217-A- 2
00911-14010	217-A- 2
	229- - 3
	232- - 4
	247- - 1
	247- - 2
	247- - 3
	247- - 3
	247- - 3
	247-A- 1
	247-A- 1
	247-A- 2
	247-A- 2
	247-A- 2
	257- - 3
	260- - 4
00911-14410	23- - 3
	34- - 1
	34- - 2
	64- - 3
	133- - 3
	133-A- 2
	136- - 3
	144- - 2
	145- - 6
	145-B- 5
	146- - 6
	148- - 1
	176- - 3
	176-A- 3
	177- - 3
	177-A- 3
	191- - 4
	191-A- 3
	192-A- 4
	192-B- 5
	213- - 2
	213- - 2
	225- - 1
	243- - 1
	243- - 2
	254- - 1
	262- - 3
00911-14510	25- - 4
	25- - 4
	28- - 1
	28- - 2
	30- - 3
	31- - 1
	33- - 2
	33- - 2

© 1972 NISSAN MOTOR CO., LTD.

REVISED: DECEMBER, 1972

PRINTED IN JAPAN

B-C

PART NUMBER INDEX

(CLASSIFIED BY PART NO.)

PUB. NO. C-0020

PART NO.	PAGE
00911-14510	34- - 1
	65- - 2
	67- - 3
	68- - 1
	68- - 3
	69- - 2
	71- - 1
	73- - 1
	92- - 2
	131- - 2
	131- - 2
	131- - 3
	131- - 3
	131-A- 2
	131-A- 2
	131-A- 3
	136- - 3
	145-A- 1
	163- - 2
	163-A- 2
	163-B- 2
	163-C- 2
	163-D- 2
	178- - 3
	178-A- 2
	178-A- 3
	182- - 5
	183- - 2
	191- - 3
	191-A- 3
	193- - 3
	193-A- 3
	193-B- 2
	193-C- 3
	193-D- 5
	196- - 2
	196- - 3
	196-B- 2
	196-C- 2
	196-D- 2
	196-E- 2
	197- - 1
	197- - 1
	197- - 2
	197- - 2
	197-A- 1
	197-A- 1
	197-A- 2
	197-A- 2
	235-A- 2

PART NO.	PAGE
00911-14510	235-B- 1
	236- - 5
	236-A- 2
	265- - 2
00911-14600	68- - 2
00911-14610	32- - 1
	64- - 4
	136- - 2
	145-A- 3
	146-A- 3
	177- - 3
	177-A- 3
	182- - 6
	182- - 6
	184- - 6
	184- - 6
00911-24410	28- - 2
	263- - 3
00911-24510	29- - 1
	122-A- 3
	122-B- 4
	179- - 3
	179- - 3
	192-A- 4
	192-B- 5
	212- - 3
	212- - 4
	234- - 3
	242- - 3
	242- - 3
	255- - 1
00911-24610	85- - 3
	122-A- 3
	165- - 4
	168- - 4
	172- - 6
	182- - 1
	201- - 2
	202- - 6
00911-24710	27- - 3
	136- - 2
	136- - 2
	182- - 5
	184- - 5
00911-24810	184- - 5
00911-31410	114- - 5
00911-34410	134- - 1
	191- - 3
	191-A- 2
	212- - 3

PART NO.	PAGE
00911-34410	213- - 2
	229- - 5
	232- - 5
	242- - 2
	243- - 2
	257- - 5
	260- - 4
00911-34510	195- - 1
	195- - 2
	195- - 2
00911-34610	181- - 3
	181-A- 4
00911-34810	135- - 4
00911-84710	181- - 2
	181-A- 3
00911-85010	181- - 3
	181-A- 3
00912-34510	182- - 2
00912-34610	184- - 6
00912-34710	184- - 5
	184- - 6
	184- - 7
00912-44410	132-A- 1
00912-44510	182- - 2
00912-44610	182- - 1
	183- - 2
00912-44710	181-A- 4
00912-44810	182- - 3
00912-54510	267- - 2
00912-64410	132- - 1
00912-64610	201- - 3
	202- - 6
00913-14010	191- - 4
	191-A- 4
00913-44400	148- - 1
00913-44410	148- - 1
00915-10610	103- - 4
	178- - 1
	178-A- 2
	237- - 1
	237- - 2
	237- - 2
00915-10810	217- - 2
	217-A- 2
	247- - 2
	247-A- 1
00915-11010	114- - 5
	134- - 1
	134- - 2
	134- - 3

© 1972 NISSAN MOTOR CO., LTD.

REVISED: DECEMBER, 1972

PRINTED IN JAPAN

B-C

PART NUMBER INDEX

PUB. NO. C-0020

(CLASSIFIED BY PART NO.)

PART NO.	PAGE
00915-11010	143- - 3
	143-A- 2
	144- - 1
	144- - 3
	144-A- 1
	144-A- 2
	144-B- 1
	144-C- 1
	151- - 1
	151-A- 2
	151-A- 2
	191- - 3
	191- - 4
	191-A- 2
	191-A- 4
	194- - 3
	198- - 3
	212- - 4
	217- - 1
	217- - 2
	217- - 2
	217- - 2
	217- - 3
	217-A- 1
	217-A- 1
	217-A- 2
	217-A- 2
	217-A- 2
	229- - 3
	229- - 3
	230- - 4
	232- - 4
	232- - 4
	233- - 2
	235- - 5
	242- - 4
	247- - 1
	247- - 2
	247- - 3
	247- - 3
	247- - 3
	247-A- 1
	247-A- 1
	247-A- 2
	247-A- 2
	247-A- 2
	257- - 3
	257- - 3
	258- - 3
	260- - 4

PART NO.	PAGE
00915-11010	260- - 4
	261- - 2
00915-11040	216- - 2
	216- - 2
	216-A- 2
	216-A- 2
	246- - 2
	246- - 3
	246-A- 2
	246-A- 2
00915-11042	217- - 3
	217-A- 3
	247- - 4
	247-A- 3
00915-11410	23- - 2
	23- - 3
	25- - 3
	27- - 1
	27- - 2
	27- - 2
	28- - 3
	29- - 1
	34- - 1
	34- - 2
	34- - 2
	64- - 3
	64- - 4
	66- - 4
	68- - 3
	68- - 3
	69- - 1
	69- - 1
	71- - 1
	74- - 2
	122-A- 1
	122-A- 1
	122-A- 2
	122-B- 1
	122-B- 3
	122-B- 3
	122-C- 1
	123-C- 3
	133- - 3
	133-A- 2
	134- - 3
	134- - 4
	135- - 3
	136- - 3
	144- - 2
	144-A- 2

PART NO.	PAGE
00915-11410	145-A- 2
	145-C- 4
	145-C- 4
	146-A- 2
	176- - 3
	176-A- 3
	177- - 3
	177-A- 3
	178- - 2
	178-A- 2
	192-A- 4
	192-B- 5
	194- - 1
	194- - 2
	202- - 6
	213- - 1
	213- - 2
	216- - 1
	216- - 2
	216-A- 1
	216-A- 2
	225- - 1
	229- - 1
	229- - 2
	229- - 4
	229- - 5
	232- - 1
	232- - 2
	232- - 4
	238- - 2
	238-A- 2
	238-B- 1
	243- - 1
	243- - 1
	246- - 2
	246- - 3
	246-A- 1
	246-A- 2
	254- - 1
	257- - 1
	257- - 2
	257- - 4
	257- - 5
	260- - 1
	260- - 2
	260- - 4
	262- - 3
	262- - 3
	262- - 3
	262- - 3

© 1972 NISSAN MOTOR CO., LTD.

REVISED: DECEMBER, 1972

PRINTED IN JAPAN

B-C

PART NUMBER INDEX

PUB. NO. C-0020

(CLASSIFIED BY PART NO.)

PART NO.	PAGE
00915-11410	262- - 3
	263- - 3
00915-11442	191- - 2
00915-11510	25- - 3
	25- - 4
	28- - 1
	28- - 2
	29- - 1
	29- - 2
	30- - 3
	31- - 1
	31- - 1
	33- - 2
	33- - 2
	34- - 1
	34- - 2
	64- - 3
	68- - 2
	68- - 3
	71- - 1
	73- - 1
	74- - 2
	92- - 2
	105- - 2
	122-A- 3
	122-B- 4
	122-B- 4
	131- - 1
	131- - 2
	131- - 2
	131- - 2
	131- - 2
	131- - 3
	131- - 3
	131- - 3
	131- - 4
	131- - 4
	131- - 4
	131-A- 1
	131-A- 1
	131-A- 2
	131-A- 2
	131-A- 2
	131-A- 3
	132-A- 2
	135- - 2
	136- - 3
	144- - 1
	144-A- 1
	144-B- 1

PART NO.	PAGE
00915-11510	144-C- 1
	145- - 1
	145- - 4
	145-A- 2
	145-A- 2
	146- - 1
	146- - 4
	146-A- 2
	146-A- 2
	178-A- 3
	182- - 5
	182- - 5
	182- - 6
	183- - 2
	184- - 4
	184- - 7
	191- - 2
	191- - 3
	191- - 3
	191- - 5
	191-A- 2
	191-A- 3
	191-A- 4
	192-A- 5
	192-B- 5
	193- - 3
	193-A- 3
	193-B- 2
	193-C- 3
	193-D- 5
	202- - 5
	213- - 4
	216- - 1
	216- - 1
	216- - 1
	216-A- 1
	216-A- 1
	216-A- 1
	228- - 4
	231- - 4
	234- - 2
	235-A- 2
	235-B- 1
	236- - 5
	236-A- 2
	236-A- 2
	243- - 4
	246- - 1
	246- - 1
	246- - 2

PART NO.	PAGE
00915-11510	246-A- 1
	246-A- 1
	246-A- 1
	250- - 1
	256- - 3
	259- - 4
	265- - 2
	266- - 2
	267- - 1
	267- - 1
00915-11610	32- - 1
	64- - 4
	67- - 1
	68- - 2
	74- - 3
	122-A- 3
	136- - 2
	136- - 2
	136- - 2
	145- - 1
	145- - 1
	146- - 1
	146- - 1
	162- - 2
	176- - 4
	176-A- 4
	177- - 4
	177-A- 4
	178- - 3
	178-A- 3
	179- - 3
	181- - 4
	182- - 1
	184- - 4
	191- - 4
	191- - 4
	191-A- 3
	191-A- 3
	194- - 3
	213- - 4
	243- - 4
00915-11710	136- - 2
	136- - 2
	181- - 3
	182- - 5
	184- - 5
	250- - 2
	267- - 1
00915-21410	27- - 1
	191- - 2

B-C

PRINTED IN JAPAN

© 1972 NISSAN MOTOR CO., LTD.

REVISED: DECEMBER, 1972

PART NUMBER INDEX

PUB. NO. C-0020

(CLASSIFIED BY PART NO.)

PART NO.	PAGE
00915-21410	191- - 2
	191- - 4
	191-A- 2
	191-A- 3
00915-21510	64- - 2
	66- - 3
	69- - 1
	122-B- 4
	122-B- 4
	145-A- 1
	145-A- 1
	145-A- 2
	146-A- 1
	146-A- 1
	146-A- 2
	161- - 2
	163- - 2
	163-A- 2
	163-B- 2
	163-C- 2
	163-D- 2
	179- - 3
	179- - 3
	184- - 7
	184- - 7
	192- - 3
	196- - 2
	196- - 2
	196-B- 2
	196-C- 2
	196-D- 2
	196-E- 2
	197- - 1
	197- - 1
	197- - 2
	197- - 2
	197-A- 1
	197-A- 1
	197-A- 2
	197-A- 2
	212- - 3
	212- - 4
	212- - 4
	234- - 3
	242- - 3
	242- - 3
	242- - 3
	255- - 1
	263- - 2
	263- - 2

PART NO.	PAGE
00915-21610	124-E- 2
	203- - 1
00915-21700	23- - 1
00915-21710	23- - 1
00915-21810	27- - 1
	64- - 1
	184- - 5
	192- - 3
	212- - 4
	234- - 3
	242- - 3
00915-21910	182- - 2
00915-40610	215- - 2
	237- - 2
	245- - 2
00915-40810	217- - 2
	217-A- 2
	220- - 2
	247- - 2
	247-A- 1
	249- - 2
	250- - 3
00915-41010	144- - 1
	144- - 3
	144- - 3
	144-A- 1
	144-A- 2
	144-B- 1
	144-C- 1
	198- - 3
	212- - 2
	212- - 4
	214- - 1
	214- - 1
	217- - 2
	217- - 2
	217- - 2
	217-A- 1
	217-A- 2
	217-A- 2
	220- - 2
	226- - 1
	229- - 3
	229- - 4
	230- - 4
	232- - 4
	232- - 4
	233- - 2
	234- - 1
	235- - 6

PART NO.	PAGE
00915-41010	237- - 1
	242- - 2
	242- - 4
	244- - 2
	247- - 2
	247- - 3
	247- - 3
	247-A- 1
	247-A- 2
	247-A- 2
	250- - 3
	254- - 1
	257- - 3
	257- - 3
	258- - 3
	260- - 4
	260- - 4
	261- - 2
	266- - 2
00915-41210	217- - 1
	217- - 2
	217-A- 1
	217-A- 1
	247- - 1
	247- - 2
	247-A- 1
	247-A- 1
00915-41410	23- - 3
	25- - 4
	27- - 2
	27- - 2
	29- - 1
	34- - 1
	34- - 2
	122-A- 1
	122-B- 1
	134- - 3
	134- - 3
	135- - 3
	135- - 3
	144- - 2
	145-C- 3
	145-C- 4
	176- - 3
	176- - 3
	176-A- 3
	176-A- 3
	177- - 3
	177- - 3
	177-A- 3

© 1972 NISSAN MOTOR CO., LTD.

REVISED: DECEMBER, 1972

PRINTED IN JAPAN

B-C

PART NUMBER INDEX

(CLASSIFIED BY PART NO.)

PART NO.	PAGE
00915-41410	177-A- 3
	178- - 2
	178-A- 2
	194- - 2
	202- - 6
	212- - 1
	213- - 1
	216- - 1
	216-A- 1
	228- - 2
	229- - 2
	229- - 5
	231- - 2
	232- - 2
	232- - 5
	234- - 1
	242- - 1
	243- - 1
	246- - 2
	246-A- 1
	256- - 2
	257- - 2
	257- - 5
	259- - 2
	260- - 2
	260- - 4
	263- - 3
	263- - 3
00915-41442	191- - 2
	215- - 3
	245- - 3
	264- - 2
00915-41510	23- - 3
	25- - 3
	25- - 4
	25- - 4
	28- - 1
	29- - 1
	29- - 2
	31- - 1
	34- - 1
	34- - 2
	65- - 2
	67- - 3
	68- - 1
	69- - 1
	73-A- 1
	131- - 4
	131-A- 2
	131-A- 2
00915-41510	132-A- 2
	134- - 2
	135- - 2
	144- - 1
	144-A- 1
	144-B- 1
	144-C- 1
	178-A- 3
	182- - 5
	182- - 6
	196- - 2
	197- - 2
	197- - 2
	197-A- 1
	197-A- 2
	202- - 5
	213- - 4
	216- - 1
	216- - 1
	216-A- 1
	216-A- 1
	220- - 1
	234- - 1
	235-A- 2
	235-B- 1
	236- - 5
	236-A- 2
	239- - 1
	243- - 4
	246- - 1
	246- - 2
	246-A- 1
	246-A- 1
	250- - 1
	263- - 3
	265- - 2
	266- - 2
	267- - 1
	267- - 1
	267- - 1
00915-41610	136- - 2
	145- - 1
	146- - 1
	179- - 3
	184- - 4
	203- - 1
	213- - 4
	243- - 3
00915-41710	250- - 2
	267- - 1
00915-41810	182- - 2
00915-51410	122-A- 2
	122-B- 3
	122-C- 1
	135- - 3
	135- - 4
	136- - 3
	148- - 1
	149- - 2
	213- - 1
	213- - 2
	213- - 2
	213- - 2
	213- - 2
	213- - 3
	214- - 1
	214- - 1
	216- - 2
	216-A- 2
	217- - 3
	217-A- 2
	225- - 1
	228- - 2
	231- - 2
	231- - 3
	238- - 2
	238-A- 2
	238-B- 1
	243- - 1
	243- - 2
	243- - 2
	243- - 2
	243- - 3
	244- - 1
	244- - 1
	246- - 3
	246-A- 2
	247- - 3
	247-A- 2
	254- - 1
	256- - 2
	259- - 2
	259- - 2
	262- - 3
	262- - 4
00915-51510	131- - 2
	131- - 2
	131-A- 1
	212- - 3
	212- - 4

© 1972 NISSAN MOTOR CO., LTD.

REVISED: DECEMBER, 1972

PRINTED IN JAPAN

PART NUMBER INDEX

PUB. NO. C-0020

(CLASSIFIED BY PART NO.)

PART NO.	PAGE
00915-51510	217- - 1
	217-A- 1
	228- - 4
	231- - 4
	234- - 3
	242- - 3
	242- - 3
	247- - 1
	247-A- 1
	255- - 1
	256- - 3
	259- - 4
	263- - 1
00915-51610	136- - 2
	201- - 3
	202- - 7
00915-51810	212- - 4
	234- - 3
	242- - 3
00915-80620	235- - 6
	235- - 6
00915-80820	234- - 3
00915-81020	236- - 5
00916-11410	67- - 1
	70- - 8
	118- - 2
	122-A- 2
	122-A- 3
	122-C- 3
	181- - 3
00916-11510	64- - 2
	109- - 2
	176- - 1
	176- - 2
	176-A- 1
	176-A- 2
	177- - 1
	177- - 2
	177-A- 1
	177-A- 2
	178- - 1
	178-A- 1
00916-11610	64- - 2
00916-11810	195- - 1
	195- - 2
00916-31410	212- - 3
	242- - 2
00916-31510	27- - 1
	236- - 5
	236-A- 2
00916-40610	235-A- 2
00916-40810	229- - 2
	232- - 2
	235-B- 1
	257- - 2
	260- - 2
00916-41010	229- - 4
	232- - 4
	257- - 4
	260- - 4
00916-41410	229- - 1
	232- - 2
	257- - 2
	260- - 1
00916-41510	229- - 3
	232- - 3
	235- - 4
	236- - 5
	236-A- 2
	257- - 3
	260- - 3
	264- - 1
00916-41542	239- - 1
00918-31010	143- - 2
	143-A- 2
	217- - 1
	217-A- 1
	247- - 1
	247-A- 1
00918-41000	144- - 3
	144-A- 2
	144-B- 2
	222- - 2
00921-01810	28- - 3
00921-02010	134- - 2
00921-11510	105- - 3
00921-11810	178- - 2
	178- - 3
	178-A- 2
	191- - 5
	191-A- 4
	195- - 2
	195- - 2
00921-21810	176- - 2
	176- - 2
	176- - 3
	176- - 5
	176-A- 2
	176-A- 3
	176-A- 3
00921-21810	176-A- 4
	177- - 2
	177- - 3
	177- - 3
	177- - 5
	177-A- 2
	177-A- 2
	177-A- 3
	177-A- 5
	178- - 3
	178-A- 3
00921-22010	67- - 2
00921-22210	191- - 4
	191-A- 3
00921-22510	86- - 2
00921-32210	90- - 1
00921-32510	107- - 2
	109- - 1
	181- - 2
	181-A- 3
00921-43010	181- - 2
	181-A- 2
00921-43510	181- - 3
	181-A- 3
00922-11010	27- - 1
00922-11400	165- - 3
	165- - 3
	168- - 3
00922-11600	178- - 2
	178-A- 2
00922-12800	166- - 1
	169- - 1
	202- - 6
00922-13200	166- - 1
	169- - 1
00922-26200	179- - 1
00926-41600	86- - 1
	107- - 1
00926-41610	86- - 1
	107- - 1
00926-51600	5- - 2
	26- - 2
	45- - 2
	66- - 4
	85- - 5
	166- - 1
	169- - 1
00931-10200	172- - 6
00931-10210	172- - 6
00931-11210	165- - 2

© 1972 NISSAN MOTOR CO., LTD.

REVISED: DECEMBER, 1972

PRINTED IN JAPAN

B-C

PART NUMBER INDEX

PUB. NO. C-0020

(CLASSIFIED BY PART NO.)

PART NO.	PAGE
00931-11210	168- - 2
00931-30200	68- - 1
00931-30210	68- - 1
	87- - 2
00931-30400	68- - 1
00931-30410	28- - 1
	68- - 1
00931-30610	25- - 4
	28- - 1
	105- - 2
00931-44810	132- - 2
	132-A- 1
00933-11000	87- - 1
00933-11600	7- - 1
	47- - 1
00933-11800	93- - 1
00933-11810	93- - 1
00933-12200	29- - 1
00933-13000	7- - 1
	47- - 1
	65- - 1
00933-13010	7- - 1
	47- - 1
	65- - 1
	83- - 2
00933-13500	3- - 1
	28- - 1
	43- - 1
	65- - 1
	83- - 1
	84- - 1
	103- - 1
	105- - 1
00933-14000	3- - 1
	23- - 1
	43- - 1
	64- - 1
00933-15000	3- - 1
	43- - 1
00933-20650	103- - 1
	105- - 1
00933-20670	4- - 1
	44- - 1
00933-20870	7- - 1
	47- - 1
00933-21070	25- - 1
00933-21250	105- - 1
00951-11000	132-A- 2
00999-20410	184- - 4
	184- - 4
01111-00032	172- - 5
01121-00061	4- - 3
	44- - 3
01211-00011	166- - 1
	169- - 1
	172- - 2
	203- - 2
01211-00021	203- - 2
01311-00021	176- - 2
	176- - 3
	176- - 4
	176-A- 2
	176-A- 3
	176-A- 3
	176-A- 4
	177- - 3
	177- - 3
	177- - 5
	177- - 5
	177-A- 2
	177-A- 2
	177-A- 3
01311-00051	191- - 4
	191-A- 3
08110-61062	122- - 3
08110-61210	103- - 4
	103- - 4
	108- - 1
	110- - 1
	118- - 2
	165- - 3
	166- - 5
	168- - 4
	169- - 5
	172- - 3
	172- - 5
08110-61262	4- - 2
	7- - 1
	44- - 2
	47- - 1
	172- - 6
08110-62010	108- - 1
08110-62062	3- - 3
	43- - 3
	122- - 1
08110-62262	4- - 2
	44- - 2
08110-62510	172- - 5
08110-63010	172- - 5
08110-64210	3- - 3
08110-64210	43- - 3
08110-81010	145-C- 5
08110-81210	10- - 1
	50- - 1
	90- - 1
08110-81410	83- - 2
08110-81610	4- - 2
	44- - 2
	90- - 1
	162- - 2
08110-82262	8- - 1
	48- - 2
08110-82510	165- - 4
08110-82862	3- - 3
	43- - 3
08110-83062	4- - 3
	4- - 3
	44- - 3
	44- - 4
08110-83510	165- - 4
	168- - 4
	172- - 5
08110-83562	12- - 2
	52- - 2
08110-84510	3- - 4
	43- - 3
	105- - 2
	119- - 1
08110-85010	3- - 4
	43- - 3
08113-81410	145-C- 4
08113-81610	145-C- 2
08114-03010	113- - 2
08115-24010	124-D- 2
08120-61210	83- - 3
08120-61410	88- - 1
08120-61462	3- - 2
	3- - 2
	6- - 1
	43- - 2
	43- - 2
	46- - 1
08120-61610	13- - 2
	83- - 3
	93- - 2
08120-61662	6- - 1
	6- - 1
	46- - 1
	46- - 1
08120-61810	86- - 1

© 1972 NISSAN MOTOR CO., LTD.

REVISED: DECEMBER, 1972

PRINTED IN JAPAN

B-C

PART NUMBER INDEX

(CLASSIFIED BY PART NO.)

PUB. NO. C-0020

PART NO.	PAGE
08120-61862	3- - 2
	43- - 2
08120-62010	8- - 1
	48- - 1
08120-62210	122-C- 1
08120-62262	13- - 1
	53- - 1
08120-62500	88- - 1
08120-62510	83- - 3
	88- - 1
08120-63262	6- - 1
08120-63510	86- - 1
08120-63562	46- - 1
08120-65010	53- - 1
08120-81800	201- - 1
	202- - 1
08120-81810	201- - 1
	202- - 1
08120-82062	109- - 2
08120-82210	88- - 2
	201- - 2
	202- - 1
08120-82510	84- - 1
08120-82810	145-C- 5
08120-83010	145-B- 2
	145-B- 4
	146-B- 2
08120-83210	165- - 2
	168- - 2
08120-83510	87- - 2
08120-85010	165- - 3
	168- - 3
08120-86010	93- - 1
	145-B- 4
08121-01410	83- - 2
08121-02210	136- - 1
08121-02510	136- - 1
08121-03065	162- - 1
08121-03510	124- - 2
	124-B- 2
	124-D- 2
08121-04510	124- - 2
	124-D- 2
08121-22510	136- - 1
08123-83310	145-C- 5
08123-84210	145-C- 5
08130-61810	93- - 2
	145-B- 2
	145-B- 4
	146-B- 2
08130-62510	93- - 2
	145-B- 2
	145-B- 4
	146-B- 2
08130-82210	202- - 7
08130-82510	145-B- 1
	145-B- 3
	146-B- 1
08130-83010	122-C- 3
08131-01810	145-B- 1
	145-B- 3
	146-B- 1
08131-04010	172- - 6
08131-04210	145-B- 1
	145-B- 3
	146-B- 1
08131-06010	165- - 4
08131-06510	165- - 4
08160-61610	172- - 2
08213-82510	7- - 1
	47- - 1
08213-82810	7- - 1
	7- - 2
	47- - 1
	47- - 2
08214-82810	4- - 1
	44- - 1
08214-83010	4- - 1
	44- - 1
08214-83210	4- - 1
	44- - 1
08223-81810	145-B- 7
08223-82010	73-A- 1
08223-82810	84- - 1
	87- - 1
	145-C- 5
	146- - 3
08223-83210	4- - 1
	44- - 1
	83- - 1
	84- - 1
08223-85010	87- - 1
08223-85510	87- - 1
08224-82810	145- - 3
08226-61610	13- - 2
	53- - 2
	145- - 4
	145-C- 7
	146- - 4
08227-02510	3- - 2
08227-02510	43- - 2
08227-03010	83- - 1
08227-06010	83- - 1
08310-30610	232- - 3
	260- - 3
08310-30612	232- - 3
	260- - 3
08310-40610	151- - 1
	151-A- 2
08310-40612	151- - 1
	155-A- 1
08310-40810	151-A- 2
	204- - 3
08310-40812	151-A- 2
	204- - 4
08310-41010	154-A- 2
	154-A- 3
08310-41012	154-A- 2
	154-A- 3
08310-41210	108- - 1
08310-41214	122- - 1
	215- - 1
	245- - 1
08310-41610	155- - 1
08310-42010	152- - 2
08310-42012	152- - 2
08310-51610	87- - 1
08310-51612	145-C- 3
08310-61010	74- - 3
	74- - 3
08310-61012	74- - 3
	74- - 3
08310-61210	122-C- 1
08310-61212	122-C- 1
08310-61214	3- - 2
	43- - 2
	123- - 2
08310-61262	3- - 2
	43- - 2
	123- - 2
08310-61610	145- - 5
	145-B- 5
	146- - 5
08310-61612	145- - 5
	145-B- 5
	146- - 5
08310-63012	135- - 3
08320-30642	217- - 4
	217-A- 3
	247- - 5

© 1972 NISSAN MOTOR CO., LTD.

REVISED: DECEMBER, 1972

PRINTED IN JAPAN

B-C

PART NUMBER INDEX

PUB. NO. C-0020

(CLASSIFIED BY PART NO.)

PART NO.	PAGE
08320-30642	247-A- 3
08320-61400	119- - 1
08320-61410	119- - 1
08320-62019	6- - 2
	6- - 2
	46- - 2
	46- - 2
08320-82010	165- - 2
	168- - 2
08320-82012	165- - 2
	168- - 3
08330-40820	154-A- 2
	154-A- 3
	155-A- 1
08350-61214	9- - 5
08360-50600	201- - 2
	202- - 2
08360-60810	3- - 3
	43- - 3
08360-61214	6- - 2
	10- - 1
	46- - 2
	50- - 2
	122- - 1
08472-20020	133- - 1
08510-41210	156- - 1
08510-41212	156- - 1
08510-51010	145-C- 3
08510-51012	145-C- 3
08510-51214	145-C- 6
08533-42042	239- - 3
	268- - 2
08721-11300	32- - 1
	32- - 1
	72- - 1
	72- - 1
	91- - 1
	91- - 1
08721-11600	198- - 3
08721-11900	68- - 2
08721-12200	68- - 2
08723-11000	133- - 2
08723-11200	33-A- 1
	132-A- 2
	133- - 1
08723-11300	135- - 4
08723-11400	32- - 1
	32- - 1
	33-A- 1
	72- - 1
08723-11400	72- - 1
	91- - 1
	91- - 1
	132- - 2
	133- - 1
	133- - 2
	133-A- 1
	133-A- 1
08723-11500	32- - 1
	33- - 2
	72- - 1
	91- - 1
	92-A- 1
08723-11800	198- - 3
08723-12000	7- - 1
	47- - 1
	63- - 1
08723-12200	63- - 1
	132- - 2
	144- - 3
08723-12400	68- - 2
08723-12600	7- - 2
	47- - 2
08723-12800	7- - 2
	7- - 2
	47- - 1
	47- - 2
08723-14400	135- - 2
08723-16600	132- - 2
	132-A- 2
08742-20020	12- - 2
	32- - 1
	33- - 2
	33-A- 1
	52- - 2
	73-A- 2
	133- - 1
08742-20030	32- - 1
	72- - 1
	91- - 1
	92-A- 1
	133- - 2
	133-A- 1
08911-01010	146- - 4
	146- - 4
08911-04210	203- - 1
	203- - 1
	203- - 2
08911-10410	216- - 2
	246- - 3
08911-10510	152- - 2
	153- - 1
	154- - 2
	155- - 1
	155-A- 1
08911-10610	13- - 2
	13- - 2
	53- - 2
	53- - 2
	145- - 4
	145- - 4
	145-C- 6
	146- - 4
	172- - 6
08911-10810	7- - 2
	12- - 1
	47- - 2
	52- - 2
	83- - 2
	108- - 1
	110- - 1
	145-B- 6
	145-B- 7
	145-C- 4
	145-C- 5
	162- - 2
	165- - 4
	165- - 4
	167- - 2
	168- - 4
	170- - 2
	172- - 5
08911-14010	93- - 1
	118- - 2
	123-C- 2
08911-20810	9- - 5
	49- - 5
	73-A- 1
	87- - 2
	87- - 2
	87- - 3
	122-C- 4
	145- - 3
	145-B- 1
	145-B- 3
	146- - 3
	146-B- 1
08911-24010	83- - 3
	122- - 4
08911-25000	203- - 1

© 1972 NISSAN MOTOR CO., LTD.

REVISED: DECEMBER, 1972

PRINTED IN JAPAN

B-C

PART NUMBER INDEX

PUB. NO. C-0020

(CLASSIFIED BY PART NO.)

PART NO.	PAGE
08911-30810	162- - 1
	167- - 1
	170- - 1
08911-34200	134- - 3
08911-34210	145-B- 1
	145-B- 3
	146-B- 1
08911-34410	166- - 1
	169- - 1
	172- - 2
	203- - 2
08911-34610	204- - 1
08913-10610	172- - 4
08915-11510	3- - 4
08915-13410	108- - 1
	204- - 4
	216- - 2
	246- - 3
08915-13510	145-C- 3
	152- - 2
	153- - 1
	154- - 2
	155- - 1
	155-A- 1
	201- - 2
	202- - 2
08915-13610	3- - 3
	3- - 3
	8- - 1
	13- - 1
	13- - 2
	13- - 2
	43- - 3
	43- - 3
	48- - 1
	53- - 1
	53- - 1
	53- - 2
	53- - 2
	83- - 3
	86- - 1
	86- - 1
	88- - 1
	93- - 2
	93- - 2
	103- - 3
	103- - 3
	103- - 4
	107- - 1
	108- - 1
08915-13610	110- - 1
	119- - 2
	122-C- 1
	122-C- 1
	145- - 4
	145- - 4
	145- - 5
	145-B- 2
	145-B- 2
	145-B- 4
	145-B- 4
	145-B- 5
	145-C- 7
	146- - 4
	146- - 5
	146-B- 2
	146-B- 2
	165- - 3
	166- - 5
	168- - 4
	169- - 5
	172- - 3
	172- - 4
	172- - 5
	172- - 5
08915-13810	3- - 3
	4- - 3
	4- - 4
	8- - 1
	9- - 5
	10- - 1
	12- - 1
	13- - 1
	43- - 3
	44- - 3
	48- - 1
	49- - 5
	50- - 1
	52- - 1
	83- - 2
	84- - 1
	87- - 2
	87- - 3
	88- - 2
	90- - 1
	90- - 1
	93- - 1
	103- - 2
	103- - 2
	105- - 1
08915-13810	107- - 1
	107- - 2
	108- - 1
	110- - 1
	113- - 2
	119- - 1
	122- - 4
	122-C- 4
	131- - 1
	131-A- 1
	145- - 3
	145- - 7
	145-B- 1
	145-B- 1
	145-B- 3
	145-B- 3
	145-B- 4
	145-C- 2
	145-C- 4
	145-C- 4
	145-C- 5
	145-C- 5
	145-C- 6
	146- - 3
	146- - 6
	146-B- 1
	146-B- 1
	162- - 2
	165- - 3
	165- - 4
	165- - 4
	167- - 1
	167- - 1
	168- - 3
	168- - 4
	170- - 1
	170- - 2
	172- - 5
	201- - 1
	201- - 2
	202- - 1
	202- - 2
	202- - 7
08915-14000	180- - 1
08915-14010	3- - 4
	83- - 4
	86- - 1
	93- - 1
	107- - 1
	108- - 1

© 1972 NISSAN MOTOR CO., LTD.

REVISED: DECEMBER, 1972

PRINTED IN JAPAN

B-C

PART NUMBER INDEX

(CLASSIFIED BY PART NO.)

PUB. NO. C-0020

PART NO.	PAGE
08915-14010	111- - 1
	112- - 1
	118- - 2
	119- - 1
	122- - 3
	123-C- 2
	136- - 2
	145- - 4
	145-B- 1
	145-C- 5
	146- - 3
	146-B- 1
	161- - 2
	172- - 6
	180- - 2
08915-14210	145-B- 1
	145-B- 3
	146-B- 1
08915-14410	166- - 1
	169- - 1
08915-15010	203- - 1
08915-23810	4- - 2
	44- - 2
	165- - 2
	165- - 3
	168- - 2
	168- - 3
08915-24010	124- - 2
	124-B- 2
	165- - 3
	165- - 4
	165- - 4
	168- - 4
	168- - 4
	172- - 6
08915-43410	204- - 4
08915-43510	145-C- 3
	154- - 2
	155- - 1
	155-A- 1
08915-43610	6- - 1
	9- - 5
	46- - 1
	93- - 2
	110- - 1
	122- - 1
	122-C- 1
	135- - 3
	145- - 5
	145-B- 2
08915-43610	145-B- 4
	145-B- 5
	146- - 5
	146-B- 2
	172- - 4
08915-43810	8- - 1
	48- - 1
	84- - 1
	87- - 2
	93- - 1
	107- - 2
	110- - 1
	122- - 4
	131- - 1
	131-A- 1
	145-C- 2
	145-C- 4
	145-C- 4
	145-C- 5
	167- - 1
	167- - 1
	170- - 1
	170- - 2
08915-44010	83- - 4
	86- - 2
	118- - 2
	123-C- 2
	124- - 2
	124-B- 2
	124-D- 2
08915-44410	166- - 1
08915-53610	122- - 1
	229- - 1
	232- - 1
	257- - 1
	260- - 1
08915-53810	7- - 2
	12- - 1
	47- - 2
	52- - 1
08915-54010	136- - 2
08915-63610	172- - 5
08916-13600	88- - 1
08916-13810	109- - 2
08916-14610	204- - 1
08916-34410	172- - 2
08916-43610	6- - 2
	6- - 2
	46- - 2
	46- - 2
08921-32500	88- - 1
08921-32510	203- - 1
	203- - 1
	203- - 2
08931-30210	83- - 1
08931-30410	3- - 1
	7- - 1
	43- - 1
	47- - 1
	87- - 1
08931-30610	84- - 1
	93- - 1
	119- - 1
	145-B- 4
08931-30810	4- - 1
	44- - 1
08941-11000	142- - 3
08941-11500	142- - 3
	142- - 3
08941-12000	142- - 3
08963-10510	230- - 4
	233- - 3
	258- - 3
	261- - 2
08963-10540	216- - 2
	246- - 2
08963-10710	249- - 2
08963-20510	212- - 1
	220- - 1
	242- - 1
	250- - 2
08964-10410	212- - 2
	242- - 1
08964-10510	144-C- 2
	217- - 3
	217-A- 3
	247- - 4
	247-A- 3
08964-10710	217- - 3
	217-A- 3
	247- - 4
	247-A- 2
09110-61210	103- - 3
	103- - 4
	108- - 1
	118- - 2
09110-61610	103- - 3
	107- - 1
09110-62010	108- - 1
09110-63010	103- - 3

© 1972 NISSAN MOTOR CO., LTD.

REVISED: DECEMBER, 1972

PRINTED IN JAPAN

B-C

PART NUMBER INDEX

PUB. NO. C-0020

(CLASSIFIED BY PART NO.)

PART NO.	PAGE
09110-65011	103- - 3
09110-82010	103- - 2
	107- - 1
09110-83010	103- - 2
09110-84510	105- - 2
	119- - 1
09110-85510	119- - 1
09114-02010	105- - 1
	105- - 1
09114-03010	113- - 2
09114-05510	119- - 1
09120-61610	109- - 1
09120-81610	109- - 2
09120-82010	109- - 2
	113- - 2
09120-82062	109- - 2
09124-03010	123-C- 2
09131-06010	107- - 1
09134-02510	106- - 4
09210-83010	108- - 1
09220-82510	105- - 1
09220-83010	105- - 1
09340-0010P	53- - 1
09911-10810	110- - 1
09915-10610	109- - 2
09915-11210	136- - 2
09915-41210	136- - 2
09961-60600	74- - 3

10000

PART NO.	PAGE
10001-E1230	61- - 1
10001-E1231	61- - 1
10001-E1241	61- - 1
10001-E1242	61- - 2
10001-E1330	61- - 1
10001-E1331	61- - 1
10001-E1340	61- - 1
10001-E1341	61- - 1
10001-E1750	21- - 1
10001-E3090	41- - 1
10001-E3120	1- - 1
10001-E3150	1- - 1
10001-E3260	41- - 1
10001-P0730	101- - 1
10001-P0731	101- - 1
10001-73531	101- - 1
10001-73533	101- - 1
10001-73538	101- - 1
10001-78431	81- - 1
10001-78432	81- - 1
10001-78453	81- - 1
10001-78454	81- - 1
10001-78455	81- - 1
10001-78456	81- - 1
10001-78457	81- - 1
10004-73400	25- - 4
10005-A3500	4- - 2
	44- - 2
	83- - 2
10005-21000	83- - 2
10005-37500	105- - 1
10005-73400	25- - 4
10006-21000	4- - 2
	28- - 2
	44- - 2
	65- - 1
10006-32200	28- - 2
	65- - 1
	84- - 1
10006-37500	105- - 1
10006-73401	25- - 4
10100-E1250	61- - 1
10100-E1251	61- - 1
10100-E1253	61- - 1
10100-E1253-03	61- - 1
10100-E1254	61- - 1

PART NO.	PAGE
10100-E1350	61- - 1
10100-E1351	61- - 1
10100-E1353	61- - 1
10100-E1353-03	61- - 2
10100-E1354	61- - 2
10100-F1740	21- - 1
10100-E3030	41- - 1
10100-E3130	1- - 1
10100-E3160	1- - 1
10100-E3290	41- - 1
10101-E0725	82- - 1
10101-E1025	82- - 1
10101-E1027	82- - 1
10101-E1725	22- - 1
10101-E3125	2- - 1
10101-E3126	2- - 1
10101-E3225	42- - 1
10101-P0325	42- - 1
10101-P1425	2- - 1
10101-73025	62- - 1
10101-76225	102- - 1
10101-76227	102- - 1
10101-76228	102- - 1
10102-E1700	21- - 1
10102-E3002	41- - 1
10102-E3100	1- - 1
10102-E3120	1- - 1
10102-E3205	41- - 1
10102-78400	81- - 1
10102-78403	81- - 1
10103-F1700	21- - 1
10103-E3002	41- - 1
10103-E3100	1- - 1
10103-E3120	1- - 1
10103-E3205	41- - 1
10103-P0704	101- - 1
10103-73510	101- - 1
10103-73511	101- - 1
10103-78400	81- - 1
10103-78403	81- - 1
10104-76201	101- - 1
10117-E0100	145- - 7
	145-B- 6
	146- - 6
10125-62200	275- - 1
11010-E0700	83- - 1
11010-E3000	43- - 1
11010-E3001	43- - 1
11010-E3100	3- - 1
11010-J0100	83- - 1

B-C

PRINTED IN JAPAN

© 1972 NISSAN MOTOR CO., LTD.

REVISED: DECEMBER, 1972

PART NUMBER INDEX

PUB. NO. C-0020

(CLASSIFIED BY PART NO.)

PART NO.	PAGE
11010-37710	103- - 1
11010-37713	103- - 1
11010-69850	23- - 1
11010-73000	64- - 1
11010-78201	83- - 1
11012-13200	64- - 3
11012-14600	83- - 2
11012-73400	23- - 2
11012-76200	103- - 1
11013-13200	64- - 3
11013-14600	83- - 3
11013-73400	23- - 2
11014-13200	64- - 3
11014-14600	83- - 3
11014-73400	23- - 2
11019-32200	83- - 1
	103- - 1
11019-73000	64- - 1
11019-76200	105- - 4
11021-E3000	4- - 1
	44- - 1
11021-13200	3- - 1
	23- - 1
	43- - 1
	64- - 1
	83- - 1
11021-37501	103- - 1
	103- - 2
11022-20100	4- - 1
	44- - 1
11022-21000	3- - 1
	43- - 1
11023-73000	64- - 1
11023-73400	25- - 2
11024-A8600	4- - 1
	44- - 1
11024-E3000	4- - 1
	44- - 1
11024-U0100	4- - 1
	44- - 1
11024-78200	83- - 1
11026-61000	3- - 2
	23- - 2
	43- - 2
	64- - 3
	83- - 3
	103- - 4
11027-E1200	63- - 1
11029-09400	64- - 3
11030-37500	103- - 3
11030-76202	103- - 3
11031-37500	103- - 3
11031-76200	103- - 3
11032-76201	108- - 1
11032-76202	108- - 1
11033-B3400	64- - 3
11033-09400	64- - 3
11035-30000	64- - 3
11037-E3000	3- - 2
	43- - 2
11038-E3000	3- - 2
	43- - 2
11039-73400	25- - 2
11041-E3000	44- - 1
11041-E3101	4- - 1
11041-P0500	84- - 1
11041-P0501	84- - 1
11041-P3100	44- - 1
11041-37505	105- - 1
11041-73001	65- - 1
11041-73402	25- - 1
11041-73403	25- - 1
11041-73443	25- - 1
	25- - 1
11041-73453	25- - 1
	25- - 1
11041-76200	105- - 1
11041-78200	84- - 1
11042-E3125	2- - 1
11042-E3225	42- - 1
11042-73025	62- - 1
11042-73026	62- - 1
11042-78026	82- - 1
11042-78226	82- - 1
11044-E0800	84- - 1
11044-E3000	44- - 1
11044-E3001	44- - 2
11044-E3002	44- - 2
11044-E3003	44- - 2
11044-E3100	4- - 1
11044-E3101	4- - 1
11044-P3000	4- - 2
11044-P3001	4- - 2
11044-69800	25- - 2
11044-73000	65- - 1
11044-73001	65- - 1
11044-74003	84- - 1
11044-76202	105- - 1
11044-76203	105- - 1
11045-76200	105- - 2
11046-A4600	4- - 2
	44- - 2
11046-E0101	25- - 2
11046-21000	44- - 2
11046-73402	3- - 1
	3- - 3
	23- - 1
	23- - 3
	25- - 2
	43- - 1
	43- - 3
	83- - 1
11047-E3000	3- - 2
	43- - 1
11047-21000	3- - 1
	43- - 1
11048-14604	4- - 1
	44- - 1
11048-73000	65- - 1
11048-73403	25- - 1
11048-76201	105- - 1
11049-E3000	4- - 2
	44- - 2
11049-21001	44- - 2
11049-73401	25- - 2
11049-76201	105- - 1
11050-73400	25- - 3
11051-73403	25- - 1
11052-E3000	4- - 1
	44- - 1
11052-73400	25- - 3
11053-73400	3- - 1
	23- - 1
	43- - 1
11054-73400	25- - 1
11055-10600	64- - 1
	145-A- 2
	146-A- 1
11056-P3000	4- - 2
	44- - 2
11056-21000	4- - 2
	44- - 2
11056-30000	64- - 1
11056-37502	105- - 1
11056-73400	25- - 2
11056-78200	84- - 1
11057-21000	4- - 2
	44- - 2
11057-30000	64- - 1
11057-37500	103- - 1

© 1972 NISSAN MOTOR CO., LTD.

REVISED: DECEMBER, 1972

PRINTED IN JAPAN

B-C

PART NUMBER INDEX

(CLASSIFIED BY PART NO.)

PUB. NO. C-0020

PART NO.	PAGE
11057-73400	25- - 2
11057-78200	84- - 1
11058-21000	4- - 2
	44- - 2
11058-21001	4- - 2
	44- - 2
11058-75500	25- - 2
	65- - 1
11059-P3000	4- - 2
	44- - 2
11059-21000	4- - 2
	44- - 2
11059-30000	65- - 1
11059-73400	25- - 2
11059-76201	105- - 2
11060-U0100	4- - 3
	44- - 3
11060-21000	4- - 3
	44- - 3
11060-36700	84- - 1
11060-73000	65- - 1
11060-73400	25- - 4
11060-73500	105- - 2
11061-E0100	25- - 4
11061-E3000	4- - 3
	44- - 3
11061-P0300	4- - 3
	44- - 3
11062-21000	4- - 3
	44- - 3
11062-30000	65- - 1
	84- - 1
	105- - 2
	145-A- 1
	146-A- 1
11062-73400	25- - 4
11062-76200	105- - 2
11063-21001	4- - 3
	44- - 3
11063-73400	25- - 2
11063-78201	84- - 1
11065-24000	84- - 1
11065-30000	65- - 1
	88- - 1
	109- - 1
11065-37506	105- - 2
11065-37507	105- - 2
11072-21000	4- - 3
	44- - 3
11072-73400	25- - 4
11076-37503	105- - 1
11082-37500	105- - 2
11083-37500	105- - 2
11084-37500	105- - 2
11085-37500	105- - 3
11086-37501	105- - 3
11086-37502	105- - 3
11093-73400	25- - 1
11098-E3000	4- - 1
	44- - 1
11098-73400	25- - 1
11099-21010	4- - 1
	44- - 1
11099-73400	25- - 1
11110-E0100	23- - 2
11110-E0101	23- - 2
11110-E3001	3- - 2
	43- - 2
11110-E3002	3- - 2
	43- - 2
11110-73000	64- - 3
11110-73501	103- - 4
11110-73502	103- - 4
11110-73600	83- - 3
11110-73601	83- - 3
11115-E3000	3- - 2
	43- - 2
11115-E3001	3- - 2
	43- - 2
11116-E3000	3- - 2
	43- - 2
11116-73401	135- - 5
11117-E3000	3- - 2
	43- - 2
11117-73400	135- - 5
11118-73400	135- - 5
11120-37500	103- - 4
11121-E0700	83- - 3
11121-E3000	3- - 2
	43- - 2
11121-32200	83- - 3
11121-37500	103- - 4
11121-73001	64- - 3
11121-73400	23- - 2
11128-69200	3- - 2
	23- - 2
	43- - 2
	64- - 3
	83- - 3
11132-73000	135- - 4
11133-73000	135- - 5
11134-21810	3- - 2
	43- - 2
11140-E3000	3- - 1
	43- - 1
11140-73402	23- - 2
11160-73400	23- - 2
11213-69200	136- - 2
11220-73000	136- - 1
11232-E0100	136- - 1
11232-E3200	136- - 1
11232-69200	136- - 1
11232-73000	136- - 1
11232-73600	136- - 1
11232-73601	136- - 1
11233-E0100	136- - 1
11233-E3200	136- - 1
11233-73001	136- - 1
11233-73500	136- - 1
11233-73601	136- - 1
11320-78000	136- - 2
11322-78000	136- - 2
11325-F1800	136- - 3
11330-E3200	136- - 3
11340-78051	136- - 2
11372-73000	136- - 3
11374-73600	136- - 3
11377-73000	136- - 3
11381-73600	136- - 3
11382-73600	136- - 3
11710-E0700	122-C- 3
11710-E0701	122-C- 3
11710-E3000	122- - 3
11710-73400	122-A- 3
11712-78000	145-A- 2
	146-A- 2
11713-21000	122- - 4
	145-A- 2
	146-A- 2
11713-21001	122- - 4
11714-78000	145-A- 2
	146-A- 2
11715-E0100	122-A- 3
11715-E3000	122- - 4
11715-69200	122-C- 4
11715-69210	145-B- 6
11716-E3000	122- - 3
11716-21000	4- - 4
	122- - 4
11720-B1100	74- - 2

B-C

PRINTED IN JAPAN

© 1972 NISSAN MOTOR CO., LTD.

REVISED: DECEMBER, 1972

PART NUMBER INDEX

PUB. NO. C-0020

(CLASSIFIED BY PART NO.)

PART NO.	PAGE
11720-B1101	74- - 2
11720-E3000	53- - 2
	145- - 3
	145-C- 6
	146- - 3
11720-E3010	53- - 2
	145- - 3
	145-C- 6
	146- - 3
11720-E3011	53- - 2
	145- - 3
	145-C- 6
	146- - 3
11720-E3015	53- - 2
	145- - 3
	145-C- 6
	146- - 3
11720-21000	13- - 2
	53- - 2
11720-23100	13- - 2
	53- - 2
11720-69200	93- - 2
11720-73403	34- - 2
11720-78201	74- - 2
11810-E1200	63- - 1
11810-E3000	4- - 3
	47- - 2
11826-E1200	63- - 1
11826-E3001	4- - 4
	44- - 3
11828-E1200	63- - 1
11828-E3000	4- - 3
	47- - 2
11830-E3000	4- - 4
11834-E1200	63- - 1
11910-E0100	145- - 1
	146- - 1
11910-E3000	3- - 4
	145- - 4
	146- - 3
11910-69200	145-B- 1
	145-B- 3
	146-B- 1
11910-78000	145-A- 1
	146-A- 1
11911-E3000	3- - 4
	145- - 4
	146- - 3
11915-E0100	3- - 4
	145- - 4
11915-E0100	146- - 4
11916-21001	145- - 3
	146- - 3
11920-E0700	145-B- 1
	145-B- 3
	146-B- 1
11920-E0705	145-B- 1
	145-B- 3
	146-B- 1
11920-E3000	4- - 4
	145- - 3
	146- - 3
11920-E3001	145- - 4
	146- - 3
11920-E5200	145- - 1
	146- - 1
11920-69200	146-B- 1
11920-73015	145-A- 1
11920-73016	145-A- 1
11920-78010	145-A- 1
	146-A- 1
11920-78015	145-A- 1
	146-A- 1
11920-78101	145- - 1
	146- - 1
11925-E0700	145-B- 1
	145-B- 3
11925-E3010	4- - 4
	145- - 3
	145-C- 5
	146- - 3
11925-69200	146-B- 1
11925-73400	145- - 1
	146- - 1
11925-78000	145-A- 1
	146-A- 1
11926-73400	145- - 2
	146- - 2
11928-69200	145-B- 1
	145-B- 3
	146-B- 1
11935-E3010	4- - 4
	145- - 3
	145-C- 5
	146- - 3
11935-69200	145-B- 2
	145-B- 4
	146-B- 1
11935-73400	145- - 1
	146- - 1
11935-78010	145-A- 1
	146-A- 1
11937-66000	145-B- 2
	145-B- 4
	146-B- 1
11937-78010	145-A- 1
	146-A- 1
11938-E3000	4- - 4
	145- - 3
	145-C- 5
	146- - 3
11938-73400	25- - 3
	33- - 2
11938-73401	25- - 3
	33- - 2
12010-E3002	45- - 1
12010-E3003	45- - 1
12010-E3004	45- - 1
12010-E3005	45- - 1
12010-E3006	45- - 1
12010-E3008	45- - 1
12010-E3101	5- - 1
12010-E3103	5- - 1
12010-E3104	5- - 1
12010-E3105	5- - 1
12010-E3106	5- - 1
12010-E3108	5- - 1
12010-13201	66- - 1
12010-13202	66- - 1
12010-13203	66- - 1
12010-13204	66- - 1
12010-13205	66- - 1
12010-13206	66- - 1
12010-13207	66- - 1
12010-37522	106- - 1
12010-37523	106- - 1
12010-37524	106- - 1
12010-37525	106- - 1
12010-37526	106- - 1
12010-37527	106- - 1
12010-37528	106- - 1
12010-69201	85- - 1
12010-69203	85- - 1
12010-69204	85- - 1
12010-69205	85- - 1
12010-69811	26- - 1
12010-69813	26- - 1
12010-69814	26- - 1
12010-69815	26- - 1
12010-69816	26- - 1

© 1972 NISSAN MOTOR CO., LTD.

REVISED: DECEMBER, 1972

PRINTED IN JAPAN

B-C

PART NUMBER INDEX

PUB. NO. C-0020

(CLASSIFIED BY PART NO.)

PART NO.	PAGE
12010-69818	26- - 1
12010-74001	85- - 1
12010-74003	85- - 1
12010-74004	85- - 1
12010-74005	85- - 1
12010-74006	85- - 1
12010-74008	85- - 1
12030-32200	85- - 3
12030-37500	106- - 2
12032-25501	85- - 1
12032-37500	106- - 1
12033-E3010	45- - 1
12033-E3030	45- - 1
12033-E3100	5- - 1
	26- - 1
12033-14600	85- - 1
12033-14601	85- - 2
12033-69800	26- - 1
12033-73003	66- - 1
	66- - 2
12033-73004	66- - 1
12033-76201	106- - 1
12033-76202	106- - 1
12034-73003	66- - 1
12035-E3010	45- - 1
12035-E3030	45- - 1
12035-E3100	5- - 1
12035-14600	85- - 1
12035-14601	85- - 1
	85- - 2
12035-69800	26- - 1
12035-73003	66- - 1
12035-73004	66- - 1
12035-73600	85- - 1
12035-76201	106- - 1
12035-76202	106- - 1
12036-E3010	45- - 1
12036-E3030	45- - 1
	45- - 1
12036-E3100	5- - 1
	26- - 1
12036-14600	85- - 1
12036-14601	85- - 2
	85- - 2
	85- - 2
12036-69800	26- - 1
12036-73003	66- - 1
12036-73600	85- - 2
12036-76201	106- - 1
12036-76202	106- - 1
12037-E3010	45- - 1
12037-E3030	45- - 1
12037-E3100	5- - 1
12037-14600	85- - 2
12037-14601	85- - 2
	85- - 3
12037-69800	26- - 1
12037-73003	66- - 1
12037-73004	66- - 1
12037-73600	85- - 2
12037-76201	106- - 1
12037-76202	106- - 1
12038-E3010	45- - 1
12038-E3030	45- - 1
12038-E3100	5- - 1
	26- - 1
12038-14600	85- - 2
12038-14601	85- - 2
	85- - 3
12038-69800	26- - 1
12038-73003	66- - 1
12038-73600	85- - 2
12038-76201	106- - 2
12038-76202	106- - 2
12039-73003	66- - 2
12039-73004	66- - 2
12039-76201	106- - 2
12039-76202	106- - 2
12040-E3010	45- - 1
12040-E3030	45- - 2
12040-E3100	5- - 1
	26- - 1
12040-14600	85- - 2
12040-14601	85- - 2
	85- - 3
12040-69800	26- - 1
12040-73600	85- - 2
12040-76201	106- - 2
12040-76202	106- - 2
12100-E0700	85- - 3
12100-09451	66- - 2
12100-23000	5- - 1
	45- - 2
12100-37552	106- - 2
	106- - 2
12100-61050	85- - 3
12100-69800	26- - 1
12100-69801	26- - 1
12109-A3501	5- - 1
	45- - 2
12109-A3510	5- - 1
	45- - 2
12109-B3010	66- - 2
12109-E0700	85- - 3
12109-04400	66- - 2
12109-14600	85- - 3
12109-21000	5- - 1
	45- - 2
12109-37502	106- - 2
12109-73400	26- - 3
12111-09405	66- - 2
12111-12200	85- - 3
12111-12210	85- - 3
12111-16700	66- - 2
12111-73400	5- - 1
	26- - 1
	45- - 2
12112-02700	66- - 2
12112-18000	5- - 1
	45- - 2
12112-58000	85- - 3
	106- - 2
12113-37500	106- - 2
12113-37501	106- - 2
12113-69800	26- - 1
12117-09405	66- - 2
12117-10400	85- - 3
12117-12210	85- - 4
12117-16700	66- - 2
12117-37504	106- - 2
12117-37505	106- - 2
12117-73400	5- - 2
	26- - 2
	45- - 2
12118-09405	66- - 2
12118-12200	85- - 4
12118-12210	85- - 4
12118-16700	66- - 2
12118-37504	106- - 2
12118-37505	106- - 2
12118-73400	5- - 2
	26- - 2
	45- - 2
12119-09405	66- - 3
12119-12200	85- - 4
12119-12210	85- - 4
12119-16700	66- - 3
12119-37504	106- - 3
12119-37505	106- - 3
12119-73400	5- - 2

B-C

PRINTED IN JAPAN

© 1972 NISSAN MOTOR CO., LTD.

REVISED: DECEMBER, 1972

PART NUMBER INDEX

(CLASSIFIED BY PART NO.)

PUB. NO. C-0020

PART NO.	PAGE
12119-73400	26- - 2
	45- - 2
12120-09405	66- - 3
12120-12200	85- - 4
12120-12210	85- - 4
12120-16700	66- - 3
12120-37504	106- - 3
12120-37505	106- - 3
12120-73400	5- - 2
	26- - 2
	45- - 2
12121-09405	66- - 2
12121-12200	85- - 3
12121-12210	85- - 3
12121-16700	66- - 2
12121-37504	106- - 3
12121-37505	106- - 3
12121-73400	5- - 2
	26- - 2
	45- - 2
12122-09405	66- - 2
12122-12200	85- - 3
12122-12210	85- - 3
12122-16700	66- - 2
12122-73400	5- - 2
	26- - 2
	45- - 2
12123-12210	85- - 3
12200-E0700	85- - 4
12200-E3001	45- - 2
12200-E3002	45- - 2
12200-E3100	5- - 2
12200-E3101	5- - 2
12200-37503	106- - 3
12200-73001	66- - 3
12200-73401	26- - 2
12200-78200	85- - 4
12200-78201	85- - 4
12205-21000	5- - 2
	45- - 2
12205-76200	106- - 3
12207-37504	106- - 3
12207-73400	5- - 2
	26- - 2
	45- - 3
12207-78200	85- - 4
12207-78400	85- - 4
12208-78400	85- - 4
12209-37504	106- - 3
12209-73400	5- - 2
12209-73400	26- - 2
	45- - 3
12209-78200	85- - 4
12209-78400	85- - 4
12210-37504	106- - 3
12210-73400	5- - 3
	26- - 2
	45- - 3
12210-78200	85- - 5
12210-78400	85- - 5
12211-37504	106- - 3
12211-73400	5- - 3
	26- - 2
	45- - 3
12211-78200	85- - 5
12211-78400	85- - 5
12212-37504	106- - 3
12212-73400	5- - 3
	26- - 2
	45- - 3
12212-78200	85- - 5
12212-78400	85- - 5
12231-73000	66- - 3
12233-73000	66- - 3
12234-73000	66- - 3
12235-73000	66- - 3
12236-73000	66- - 3
12279-A4600	3- - 1
12279-09400	23- - 1
12279-21000	3- - 1
12279-21010	3- - 1
	43- - 1
12279-32200	83- - 2
12279-37502	103- - 2
12279-73000	64- - 2
12280-13200	64- - 3
12280-37503	106- - 4
12280-73000	66- - 3
12281-13200	64- - 3
12281-37502	106- - 4
12281-73000	66- - 4
12287-09400	64- - 2
12289-B3000	64- - 2
12289-09400	64- - 2
12289-14600	23- - 1
	83- - 2
	103- - 2
12289-21003	3- - 1
	43- - 1
12289-32201	103- - 2
12293-P0500	83- - 1
12293-18001	3- - 1
	43- - 1
12293-37501	103- - 1
12294-37500	103- - 1
12294-37501	103- - 1
12294-73400	23- - 1
12294-78201	83- - 1
12295-73400	23- - 1
12299-32200	66- - 4
	85- - 5
12302-A3500	5- - 2
	45- - 3
12302-32200	85- - 5
12302-37500	106- - 3
12302-37501	106- - 3
12302-73001	66- - 4
12302-73401	26- - 2
12303-E0700	145-B- 2
	145-B- 4
12303-E3000	5- - 2
	45- - 3
12303-E3001	5- - 2
	45- - 3
12303-37602	106- - 3
12303-38700	85- - 5
12303-73001	66- - 4
12303-78100	26- - 3
12303-78200	85- - 5
	146-B- 2
12305-61201	66- - 4
	145-A- 2
	146-A- 1
12307-78000	145-A- 2
	146-A- 1
12308-32200	106- - 4
12308-61503	106- - 4
12308-65000	5- - 2
	26- - 3
	45- - 3
	66- - 4
	85- - 5
12309-61503	106- - 4
12309-66600	5- - 2
	45- - 3
12309-73401	26- - 3
	66- - 4
12309-78200	85- - 5
12310-E3000	5- - 3
	45- - 3

© 1972 NISSAN MOTOR CO., LTD.

REVISED: DECEMBER, 1972

PRINTED IN JAPAN

B-C

PART NUMBER INDEX

PUB. NO. C-0020

(CLASSIFIED BY PART NO.)

PART NO.	PAGE
12310-E3001	5- - 3
	45- - 3
12310-P0500	85- - 5
12310-P0501	85- - 5
12310-37600	106- - 4
12310-39001	26- - 3
	66- - 4
12310-78200	85- - 5
12312-37500	106- - 4
12312-61000	5- - 3
	5- - 3
	26- - 3
	45- - 3
	45- - 3
	66- - 4
	85- - 5
12313-10600	5- - 3
	26- - 3
	45- - 3
	66- - 4
	85- - 5
	106- - 4
12314-30000	26- - 3
	66- - 4
	66- - 5
12314-37500	106- - 4
12315-A4000	5- - 3
	45- - 3
12315-21001	5- - 3
	45- - 3
12315-78200	85- - 5
12316-76200	106- - 4
12318-37502	106- - 4
12318-73000	66- - 3
12319-37503	106- - 4
12319-73000	66- - 3
12320-37502	106- - 4
12320-73000	66- - 4
12321-37503	106- - 4
12321-73000	66- - 4
12330-E3000	5- - 3
	45- - 3
12330-62800	66- - 5
12330-78210	26- - 3
12331-E3000	5- - 3
	45- - 3
12331-62800	66- - 4
12331-83010	26- - 3
12333-A1000	5- - 3
	45- - 3
12333-62800	66- - 5
12333-78200	26- - 3
13001-E3001	6- - 1
	46- - 1
13001-18810	86- - 1
13001-37504	107- - 1
13001-73001	67- - 1
13001-75501	27- - 1
13001-75502	27- - 1
13001-78201	86- - 1
13002-37500	103- - 1
13002-71204	83- - 1
13002-71205	83- - 1
13002-71206	83- - 1
13002-71207	83- - 1
13002-73001	64- - 1
13003-37500	103- - 1
13003-73001	64- - 1
13004-37500	103- - 1
13004-37501	103- - 1
13004-73002	64- - 1
13004-73003	64- - 1
13010-02701	67- - 1
13010-21000	6- - 1
	46- - 1
13010-73405	27- - 1
13010-76200	107- - 1
13010-76201	107- - 1
13010-78200	86- - 1
13012-21002	6- - 1
	46- - 1
13012-73400	27- - 1
13012-78200	86- - 1
13013-78200	86- - 1
13014-37500	107- - 1
13015-21002	6- - 1
	46- - 1
13015-73400	27- - 1
13019-37500	107- - 1
13021-21000	5- - 2
13021-37500	106- - 3
13021-37501	106- - 3
13021-37502	106- - 3
13021-73000	66- - 4
13021-73400	26- - 2
	45- - 2
13021-73600	85- - 5
13024-A0100	27- - 1
13024-21000	6- - 1
	46- - 1
13024-30800	67- - 1
13024-37500	107- - 1
13024-73400	27- - 1
13024-78200	86- - 1
13028-10601	67- - 1
13028-21000	6- - 1
	46- - 1
13028-73400	27- - 1
13028-73600	86- - 1
13030-08000	67- - 1
13030-37500	107- - 1
13031-37500	103- - 2
13032-18000	6- - 1
	46- - 1
13032-30000	67- - 1
13034-37502	103- - 2
13034-78000	64- - 2
13036-37501	103- - 3
13036-73000	64- - 2
13036-76200	103- - 3
13037-01300	64- - 2
13037-37501	103- - 2
13041-37501	103- - 2
13042-A3500	3- - 3
13042-A3510	3- - 3
	23- - 2
	43- - 3
	64- - 2
13042-32200	103- - 2
13042-73000	3- - 3
	23- - 2
	43- - 3
	64- - 2
13044-37501	103- - 3
13044-73000	64- - 2
13047-37501	103- - 2
13048-A7101	3- - 4
13049-E3000	3- - 3
	43- - 3
13049-P0300	3- - 3
	43- - 3
13050-21000	3- - 3
	34- - 2
	43- - 3
13052-37500	118- - 2
13057-73405	27- - 1
13058-21000	6- - 1
	46- - 1
13059-21000	6- - 1
	46- - 1

B-C

PRINTED IN JAPAN

© 1972 NISSAN MOTOR CO., LTD.

REVISED: DECEMBER, 1972

PART NUMBER INDEX

(CLASSIFIED BY PART NO.)

PART NO.	PAGE
13060-73400	27- - 2
13061-E0100	23- - 1
13062-73400	23- - 1
13068-73400	27- - 2
13070-E3000	6- - 1
	46- - 1
13070-E3001	6- - 1
	46- - 1
13070-10600	67- - 1
13070-32200	86- - 1
13070-73402	27- - 2
13079-73401	27- - 2
13081-37500	103- - 1
13081-76200	103- - 1
13081-78200	83- - 1
13082-08000	67- - 1
13085-21002	6- - 1
	46- - 1
13085-78100	27- - 2
13087-73400	27- - 2
13088-78100	27- - 2
13091-A3500	6- - 1
	46- - 1
13095-73400	27- - 1
13096-73401	27- - 1
	27- - 1
13100-E3002	6- - 1
	46- - 1
13100-E3003	6- - 1
	46- - 1
13103-E3001	46- - 2
13103-E3002	6- - 2
	46- - 2
13104-E3001	6- - 2
	46- - 2
13104-E3002	6- - 2
	46- - 2
13104-E3003	6- - 2
	46- - 2
13201-10600	67- - 1
13201-73402	27- - 2
13201-78200	86- - 1
13201-78201	86- - 1
13201-78202	86- - 1
13201-90005	107- - 1
13201-90006	107- - 1
13201-90007	107- - 1
13202-10600	67- - 1
13202-23001	6- - 2
	46- - 2
13202-66700	86- - 1
13202-75400	27- - 2
13202-76200	107- - 1
13202-76201	107- - 1
13202-76202	107- - 1
13202-78201	86- - 1
13202-78202	86- - 2
13203-E3000	46- - 2
13203-E4100	6- - 2
13203-08100	67- - 1
13203-21002	27- - 2
13203-32200	86- - 2
	107- - 2
13203-69000	27- - 2
13204-E3000	46- - 2
13204-08100	67- - 1
13204-23000	6- - 2
13204-69000	27- - 2
13205-14600	6- - 2
	27- - 2
	46- - 2
13206-23000	6- - 2
	46- - 2
13207-B5100	67- - 2
13207-08000	67- - 1
13207-20300	67- - 1
13207-21002	6- - 2
	46- - 2
13207-66700	86- - 2
13207-73403	27- - 3
13207-76200	107- - 2
13207-76201	107- - 2
13207-76202	107- - 2
13207-78100	27- - 2
13207-78200	86- - 2
13208-78150	27- - 1
13208-90002	107- - 2
13209-04100	67- - 2
13209-06000	67- - 2
13209-12900	86- - 2
13209-37501	107- - 2
13209-73401	6- - 2
	27- - 3
	46- - 2
13209-78200	86- - 2
13210-12200	86- - 2
13210-73400	6- - 2
	27- - 3
	46- - 2
13211-30001	65- - 1
13212-73410	25- - 1
13213-30002	65- - 1
13213-73410	25- - 1
13214-37500	105- - 1
13214-73400	4- - 1
	25- - 1
	44- - 1
13215-A8600	4- - 1
	44- - 1
13215-21000	4- - 1
	44- - 1
13215-37500	105- - 1
13215-78100	25- - 2
13216-73401	27- - 3
13217-73400	27- - 3
13218-A3500	6- - 2
	46- - 2
13218-21000	6- - 2
	46- - 2
13219-73400	27- - 3
13222-37504	107- - 2
13222-78200	86- - 2
13223-78200	86- - 2
13224-76200	107- - 2
13224-78200	86- - 2
13226-78200	86- - 2
13228-10400	25- - 4
	65- - 3
13228-32200	84- - 2
	105- - 3
13228-76200	84- - 2
	105- - 3
13231-08001	67- - 3
13231-32200	86- - 3
	107- - 3
13231-78200	86- - 3
	107- - 3
13234-21000	6- - 2
	46- - 2
13234-78100	27- - 3
13234-78200	86- - 2
13235-21001	6- - 2
	46- - 2
13235-78101	27- - 3
13235-78200	86- - 2
13238-12200	86- - 3
13238-13200	67- - 3
13238-37501	107- - 3
13238-37502	107- - 3
13239-32200	25- - 3

© 1972 NISSAN MOTOR CO., LTD.

REVISED: DECEMBER, 1972

PRINTED IN JAPAN

PART NUMBER INDEX

PUB. NO. C-0020

(CLASSIFIED BY PART NO.)

PART NO.	PAGE
13239-32200	65- - 3
13240-09400	67- - 2
13240-37502	105- - 3
13241-65000	4- - 2
	44- - 3
	122- - 3
13247-30000	67- - 2
13248-30001	67- - 2
13249-30001	67- - 2
13250-73000	65- - 1
13251-73010	67- - 2
13251-73011	67- - 2
13252-32200	86- - 2
13252-37503	107- - 2
13252-73000	67- - 2
13252-73010	67- - 2
13254-30001	67- - 2
	107- - 2
13254-58000	86- - 2
13255-A8600	6- - 3
	46- - 3
13255-21000	6- - 3
	46- - 3
13255-58000	86- - 2
	107- - 2
13255-78100	27- - 3
13256-21003	6- - 3
	46- - 3
13256-30000	67- - 2
13256-37500	107- - 2
13256-58000	86- - 2
	107- - 2
13256-78101	27- - 3
13257-09400	67- - 2
13257-21000	6- - 2
	6- - 2
	46- - 2
13257-37501	107- - 2
13257-37503	107- - 2
13257-78100	27- - 3
13258-37501	107- - 2
13258-37503	107- - 2
13258-73010	67- - 2
13258-78200	86- - 2
13259-78200	86- - 2
13260-30000	67- - 2
13261-30000	67- - 2
13262-30000	67- - 2
13264-F3000	44- - 2
13264-F3100	4- - 2
13264-P0100	4- - 2
	44- - 2
13264-37500	105- - 3
13264-74000	84- - 2
13264-76200	105- - 3
13264-76221	105- - 3
13264-78100	25- - 3
13264-84701	84- - 2
13265-E1200	63- - 1
13265-78050	65- - 2
13267-23000	4- - 2
	44- - 3
13270-E3001	4- - 3
	44- - 3
13270-E3400	84- - 2
13270-36700	84- - 2
13270-37501	105- - 3
13270-73000	65- - 3
13270-73400	25- - 3
13270-76200	105- - 3
13273-37500	105- - 3
13274-E3000	4- - 3
	44- - 3
13274-37500	105- - 3
13274-78200	84- - 2
13275-F0700	84- - 2
13275-E0710	84- - 2
	105- - 3
13275-F1000	25- - 4
	65- - 3
13275-37500	105- - 3
13279-10600	67- - 2
13282-73400	25- - 3
13284-37501	107- - 2
13285-37501	107- - 3
13285-37503	107- - 3
13287-37501	107- - 3
13288-37500	107- - 3
13289-58000	86- - 2
	107- - 2
13291-04100	67- - 2
13500-78200	83- - 2
13500-78251	83- - 2
13501-A8600	3- - 3
	43- - 3
13501-21002	3- - 3
	43- - 2
13501-78100	23- - 2
13502-E3000	3- - 3
	43- - 3
13503-78200	83- - 2
13510-E0700	83- - 2
	103- - 2
13510-78200	83- - 2
	103- - 2
13520-E0700	83- - 2
13520-P0100	3- - 3
	43- - 3
13520-21000	3- - 3
	43- - 3
13520-78100	23- - 3
13520-78200	83- - 2
13521-P0100	3- - 3
	43- - 3
13521-21000	3- - 3
	43- - 3
13521-73400	23- - 3
13530-E0100	34- - 2
13530-73401	34- - 2
13540-21001	3- - 3
	43- - 3
13540-73400	23- - 3
13540-78200	83- - 2
13541-73400	23- - 3
14002-A0126	28- - 1
14002-E0626	28- - 1
14002-E3002	7- - 1
	47- - 1
14003-E1200	63- - 1
14003-73003	68- - 1
14003-73004	68- - 1
14003-73504	108- - 1
14003-73505	108- - 1
14003-78204	87- - 1
14004-E3000	7- - 2
	47- - 2
14004-37502	108- - 1
14004-78252	87- - 1
14004-78254	87- - 1
14005-34200	87- - 2
14006-36700	87- - 1
14006-73000	68- - 1
14006-73001	68- - 1
14006-73400	28- - 1
14007-73000	68- - 1
14007-73400	28- - 1
14007-78201	28- - 2
	87- - 2
14008-E1200	63- - 1
14008-73001	74- - 1

© 1972 NISSAN MOTOR CO., LTD.

REVISED: DECEMBER, 1972

PRINTED IN JAPAN

B-C

PART NUMBER INDEX

(CLASSIFIED BY PART NO.)

PART NO.	PAGE
14008-73002	68- - 1
14009-73001	74- - 2
14009-75550	28- - 2
14009-78252	87- - 2
14010-78202	87- - 2
14012-75501	28- - 2
14012-78200	87- - 2
14013-30000	87- - 2
14013-73601	68- - 1
14015-73401	23- - 2
14015-78201	28- - 2
14016-78201	7- - 1
	47- - 1
	87- - 1
14020-32200	87- - 1
14021-78200	87- - 1
14022-58000	87- - 1
14024-36700	87- - 1
14025-85061	87- - 1
14026-78201	87- - 1
14027-36700	87- - 1
14028-E3000	7- - 2
	47- - 2
14034-13200	68- - 2
14034-14600	87- - 2
14035-E0100	28- - 1
14035-E0700	87- - 2
14035-E3000	7- - 1
14035-E3001	7- - 1
	47- - 1
14035-37500	108- - 1
14035-73000	68- - 2
14035-74001	87- - 2
14037-E3000	7- - 2
	47- - 2
14037-32200	7- - 2
	28- - 1
	47- - 2
	87- - 2
	108- - 1
14037-73000	68- - 2
14039-30000	131- - 1
	131-A- 1
14040-73000	68- - 2
14040-73001	68- - 2
14041-73001	65- - 2
14043-36700	87- - 1
14047-36700	87- - 1
14049-72600	25- - 4
14049-76001	28- - 1
14051-E3001	7- - 2
	47- - 2
14051-E5600	7- - 2
14052-E0601	28- - 2
14052-E3001	7- - 1
	47- - 1
14053-E0601	28- - 2
	34- - 2
14053-E3001	7- - 1
	47- - 1
14053-73000	68- - 2
14054-E3001	7- - 1
	47- - 1
14054-E4600	7- - 1
	47- - 1
14054-73000	68- - 2
14055-E3000	7- - 1
	47- - 1
14055-75501	25- - 3
14055-75502	25- - 3
14056-E3001	7- - 2
	47- - 2
14056-14600	65- - 2
	68- - 2
14056-73000	68- - 2
14056-75500	28- - 2
14057-A0101	28- - 2
14058-E0600	28- - 2
14058-E3000	7- - 2
	47- - 2
14058-25500	7- - 2
	65- - 2
	74- - 1
14064-E3000	7- - 2
14071-73000	68- - 2
14071-75500	28- - 3
14072-73400	28- - 3
14234-37500	108- - 2
14325-73504	108- - 1
14325-73505	108- - 1
14327-37500	108- - 1
14329-37500	108- - 2
14330-E3000	9- - 5
	49- - 5
14330-35004	68- - 3
	87- - 2
14330-35005	68- - 3
	87- - 3
14330-73500	108- - 2
14330-75500	28- - 2
14330-75500	30- - 3
14331-34200	9- - 5
	28- - 2
	30- - 3
	49- - 5
	68- - 3
14331-34201	87- - 3
14331-37700	108- - 2
14332-73500	108- - 2
14333-37502	108- - 2
14334-37501	108- - 2
14336-37500	108- - 2
14337-37501	108- - 2
14338-37700	108- - 2
14339-37500	108- - 3
14345-37500	108- - 2
14345-37501	108- - 2
14345-37502	108- - 2
14346-37500	108- - 2
14346-61500	108- - 2
14347-37501	108- - 2
14348-73502	108- - 2
14349-37701	108- - 2
14352-61500	108- - 2
14371-37500	108- - 3
14372-37500	108- - 3
14375-73500	108- - 2
14600-73503	123-C- 3
14650-61503	123-C- 3
14651-37600	123-C- 3
14652-37600	123-C- 3
14654-37601	123-C- 3
14655-37600	123-C- 3
14656-37600	123-C- 3
14657-37600	123-C- 3
14658-37603	123-C- 3
14660-37600	123-C- 3
14661-37600	123-C- 3
14662-37600	123-C- 3
14664-37600	123-C- 3
14670-73501	123-C- 4
14671-61500	123-C- 4
14672-37601	123-C- 4
	123-C- 4
14675-37600	123-C- 3
14680-37600	123-C- 3
14681-37600	123-C- 3
14682-73500	123-C- 3
14683-37601	123-C- 4
14684-37600	123-C- 4

© 1972 NISSAN MOTOR CO., LTD.

REVISED: DECEMBER, 1972

PRINTED IN JAPAN

PART NUMBER INDEX

PUB. NO. C-0020

(CLASSIFIED BY PART NO.)

PART NO.	PAGE
14685-37600	123-C- 4
14686-37600	123-C- 4
14687-37600	123-C- 4
14842-B2001	145- - 7
	146- - 6
14875-A7700	7- - 1
	7- - 1
	47- - 1
	47- - 1
14875-25600	7- - 1
	7- - 1
	47- - 1
	47- - 1
15000-73000	69- - 1
15010-21001	8- - 1
	48- - 1
15010-73400	29- - 1
15010-73502	109- - 1
15010-73503	109- - 1
15010-73504	109- - 1
15010-78200	88- - 1
15015-21000	8- - 1
	48- - 1
15015-37503	109- - 1
15015-73000	69- - 1
15015-73400	29- - 1
15015-73501	109- - 1
15015-73600	88- - 1
15019-30100	8- - 1
	29- - 1
	48- - 1
	69- - 1
15020-21000	8- - 1
	48- - 1
15020-21005	8- - 1
	48- - 1
15020-71102	88- - 1
	109- - 1
15020-78200	88- - 1
	109- - 1
15020-78205	88- - 1
	88- - 1
	109- - 1
15021-32200	109- - 1
15023-32200	88- - 1
	109- - 1
15023-78200	88- - 1
	109- - 1
15025-21000	8- - 1
	48- - 1
15025-73400	29- - 1
15028-32200	88- - 1
	109- - 1
15030-21000	8- - 1
	48- - 1
15030-32200	109- - 1
15036-10600	69- - 1
15036-21000	8- - 1
	48- - 1
15036-65000	23- - 3
	29- - 1
	34- - 1
15036-73400	29- - 1
15037-21000	8- - 1
	48- - 1
15038-10625	8- - 1
	48- - 1
	69- - 1
15038-73425	29- - 1
15040-10600	69- - 1
15040-21001	8- - 1
	48- - 1
15040-37502	109- - 2
15040-61000	88- - 2
15040-73400	29- - 2
15042-20100	83- - 1
15042-37500	103- - 1
15042-37501	103- - 2
15043-21000	5- - 2
	45- - 3
15043-73400	26- - 2
15050-E3000	48- - 1
15050-E3020	8- - 1
15050-12200	69- - 1
15050-37501	109- - 1
15050-73400	29- - 2
15050-78200	88- - 1
15059-E3000	8- - 2
	48- - 1
15059-73400	29- - 2
15066-21001	8- - 1
	48- - 1
15066-30000	69- - 1
15066-37500	109- - 2
15066-73400	29- - 1
15066-78200	88- - 2
15067-10600	69- - 2
15067-73400	29- - 1
	34- - 2
15132-08700	29- - 1
15132-08700	69- - 1
15132-09400	29- - 1
	69- - 1
15132-21000	8- - 1
	48- - 1
15132-58000	88- - 1
	109- - 1
15132-66600	88- - 1
15133-10603	69- - 1
15133-21000	8- - 1
	48- - 1
15133-61504	88- - 1
	109- - 1
15133-73400	29- - 1
15134-10602	8- - 1
	29- - 1
	48- - 1
	69- - 1
15136-10601	8- - 1
	29- - 1
	48- - 1
	69- - 1
15136-58000	88- - 1
	109- - 1
15137-10600	8- - 1
	29- - 1
	48- - 1
	69- - 1
15137-58000	88- - 1
	109- - 1
15140-70800	83- - 3
15140-73000	64- - 3
15140-73500	103- - 3
15140-74000	83- - 3
15146-12200	3- - 1
	23- - 1
	43- - 1
	64- - 2
	83- - 3
15147-37500	103- - 3
15150-37700	103- - 3
15150-37701	103- - 3
15200-76200	112- - 1
15200-76201	111- - 1
15200-76203	111- - 1
15208-13211	64- - 4
	83- - 3
15208-13212	64- - 4
	83- - 3
15208-65002	145-A- 2

© 1972 NISSAN MOTOR CO., LTD.

REVISED: DECEMBER, 1972

PRINTED IN JAPAN

B-C

PART NUMBER INDEX

(CLASSIFIED BY PART NO.)

PART NO.	PAGE
15208-65002	146-A- 2
15208-65010	3- - 4
	23- - 2
	43- - 4
	145-A- 2
	146-A- 2
15208-65011	3- - 4
	23- - 2
	43- - 4
	145-A- 3
	146-A- 2
15208-76225	111- - 1
	112- - 1
15213-21000	3- - 1
	43- - 1
15213-21001	3- - 1
	43- - 1
15213-73401	23- - 1
15213-76200	111- - 1
	112- - 1
15223-76200	111- - 1
	112- - 1
15224-76200	111- - 1
	112- - 1
15228-76200	111- - 1
	112- - 1
15229-76200	111- - 1
	112- - 1
15237-13201	64- - 4
15237-78000	64- - 4
	145-A- 3
	146-A- 2
15238-78200	83- - 3
15239-B3400	64- - 4
	145-A- 3
	146-A- 2
15239-E0700	83- - 3
15239-10600	64- - 4
	145-A- 3
	146-A- 2
15239-61502	111- - 1
	112- - 1
15239-78200	83- - 3
15241-73400	3- - 1
	23- - 2
	43- - 1
15242-61500	111- - 1
	112- - 1
15255-B3430	25- - 3
	65- - 3
15255-B3434	84- - 2
15255-E3100	4- - 3
	44- - 3
15255-P0300	4- - 3
	44- - 3
15255-15853	25- - 3
	65- - 2
	84- - 2
15255-15953	65- - 2
15255-37703	105- - 4
15265-76200	103- - 3
15266-76200	103- - 3
15270-B3400	25- - 3
	65- - 3
	84- - 2
	105- - 4
15270-E3000	4- - 3
	44- - 3
15270-11200	25- - 3
	65- - 3
	84- - 2
	105- - 4
15280-90001	111- - 1
	112- - 1
15282-90002	111- - 1
	112- - 1
15291-76200	111- - 1
	112- - 1
15296-37501	103- - 3
	105- - 1
15300-76200	111- - 1
	112- - 1
15301-61501	112- - 1
15301-76200	111- - 1
	112- - 1
15303-76200	111- - 1
	112- - 1
15304-61501	111- - 1
	112- - 1
15305-76200	111- - 1
	112- - 1
15341-61500	111- - 1
	112- - 1
16009-73010	70- - 8
16010-E3006	49- - 1
16010-E3100	9- - 1
16010-E3101	9- - 1
16010-69202	89- - 1
16010-69203	89- - 1
16010-69204	89- - 1
16010-69803	30- - 1
16010-73004	70- - 1
16010-73025	70- - 8
16010-73026	70- - 8
16010-73027	70- - 8
16010-73028	70- - 8
16010-73704	70- - 1
16010-73705	70- - 1
16010-78225	89- - 5
16010-78226	89- - 5
16010-78227	89- - 6
16010-78228	89- - 6
16011-E3010	49- - 4
16011-E3110	9- - 4
16011-E5211	49- - 4
16011-E5212	49- - 4
16011-69810	30- - 3
16014-76500	9- - 2
	49- - 2
16016-73011	9- - 1
	30- - 1
	49- - 1
	70- - 2
16016-74505	89- - 5
16020-36710	70- - 4
16020-73000	68- - 3
16026-36710	9- - 2
	30- - 2
	49- - 2
	70- - 4
16029-31300	89- - 1
	89- - 1
	89- - 5
16029-35000	89- - 2
	89- - 2
16031-31300	89- - 1
16033-F4110	49- - 3
16033-E4310	9- - 3
16033-36710	70- - 5
16033-73010	70- - 5
16033-73011	70- - 5
16033-73012	70- - 5
16033-73015	70- - 5
16033-73016	70- - 5
16033-73017	70- - 5
16033-73018	70- - 5
16034-21615	70- - 6
16034-75510	70- - 5
16035-84705	89- - 3
16036-23010	30- - 2

© 1972 NISSAN MOTOR CO., LTD.

REVISED: DECEMBER, 1972

PRINTED IN JAPAN

PART NUMBER INDEX

PUB. NO. C-0020

(CLASSIFIED BY PART NO.)

PART NO.	PAGE
16036-84700	89- - 3
16040-85060	70- - 6
16041-85060	70- - 5
16043-19915	9- - 3
	49- - 3
	70- - 5
16043-71210	70- - 5
16044-85060	70- - 5
16049-76500	9- - 2
	30- - 2
	49- - 2
16049-84700	89- - 5
16051-85061	9- - 3
	49- - 3
16052-08102	89- - 3
16052-85060	30- - 2
	70- - 6
16053-E3110	9- - 4
16053-13210	30- - 3
16053-20610	49- - 4
16053-73011	49- - 4
16053-73012	70- - 6
16053-84700	89- - 3
16054-80116	30- - 1
	70- - 5
16054-21015	70- - 6
16054-23015	70- - 5
16054-69815	30- - 1
16054-73011	70- - 5
16054-73015	70- - 5
16054-78500	30- - 3
16054-84705	89- - 3
16055-73011	9- - 4
16055-73012	70- - 6
16059-E3110	9- - 2
	30- - 1
16059-14810	70- - 2
16059-75510	49- - 2
16060-10400	9- - 2
	49- - 2
	70- - 2
16060-31300	89- - 4
16061-73011	9- - 1
	30- - 1
	49- - 1
	70- - 2
16061-84700	89- - 3
16062-31300	89- - 3
16062-36710	9- - 1
	30- - 1
16062-36710	49- - 1
16062-73011	70- - 2
16063-23011	9- - 1
	30- - 1
	49- - 1
16063-35000	89- - 4
16064-14510	9- - 4
	49- - 4
16064-23010	9- - 1
	49- - 1
16064-35000	89- - 3
16064-73011	70- - 2
16065-08010	70- - 1
16065-21005	89- - 1
16065-23015	30- - 3
16065-32201	89- - 1
16065-36710	70- - 2
16065-71210	70- - 1
16065-74505	89- - 5
16071-E3010	49- - 2
16071-23010	30- - 2
16071-30100	9- - 2
	49- - 2
	70- - 6
16072-36702	89- - 2
16072-75510	9- - 2
	49- - 2
16073-85060	9- - 2
	49- - 2
	70- - 3
	70- - 4
	70- - 6
16075-35010	9- - 1
	49- - 1
	70- - 2
16076-08000	70- - 6
16076-23110	30- - 3
16076-31301	89- - 4
16078-31300	89- - 1
	89- - 5
16079-23011	9- - 1
	49- - 1
16079-35000	89- - 4
16080-04000	9- - 3
	30- - 2
	49- - 3
	70- - 6
16081-E3011	49- - 5
16081-23010	30- - 3
16081-36700	89- - 4
16081-73012	70- - 6
16081-73013	70- - 7
16082-23010	9- - 4
	49- - 4
16082-73011	70- - 1
16082-73711	70- - 1
16082-73712	70- - 8
16084-22010	9- - 4
	30- - 1
	49- - 4
16084-30101	70- - 1
16086-14810	9- - 3
	49- - 3
	70- - 3
	70- - 4
	70- - 7
16086-35000	89- - 4
16086-73711	70- - 1
16090-31300	89- - 2
	89- - 3
16091-10560	9- - 4
	49- - 4
	70- - 7
16091-14810	70- - 7
16091-31300	89- - 2
16091-73711	70- - 1
16091-74100	89- - 5
16092-36700	89- - 4
16093-A3510	30- - 2
	70- - 4
16093-36702	89- - 1
16093-73011	30- - 2
	70- - 4
16094-21600	89- - 4
16094-76500	30- - 2
	70- - 3
16094-84700	89- - 5
16094-85060	70- - 3
16095-36710	9- - 2
	30- - 2
	49- - 2
	70- - 6
16098-08700	89- - 5
16098-73401	9- - 2
	30- - 2
	49- - 2
	70- - 3
16101-A3710	9- - 2
	30- - 1
	49- - 2

B-C

PRINTED IN JAPAN

© 1972 NISSAN MOTOR CO., LTD.

REVISED: DECEMBER, 1972

PART NUMBER INDEX

(CLASSIFIED BY PART NO.)

PART NO.	PAGE
16101-A3710	70- - 3
16101-36710	70- - 3
16101-84700	89- - 4
16103-31301	89- - 3
	89- - 3
16104-73011	30- - 2
	70- - 4
16108-08000	9- - 2
	30- - 2
	49- - 2
16108-21605	89- - 5
16108-31300	89- - 5
16108-36710	70- - 3
16109-36702	89- - 5
16109-73011	9- - 4
	49- - 4
	70- - 6
16110-73710	70- - 7
16111-A0110	9- - 2
	49- - 2
16111-23012	30- - 2
16111-35210	70- - 3
16111-66810	70- - 3
16111-73016	70- - 7
16111-78205	89- - 5
16114-23011	9- - 1
	30- - 1
	49- - 1
16114-73011	70- - 2
16114-74505	89- - 1
16116-73011	70- - 1
16116-75010	30- - 1
16116-75011	9- - 4
	30- - 1
	49- - 4
16116-78501	9- - 4
	49- - 4
16117-37000	89- - 1
16117-73011	9- - 3
	49- - 3
	70- - 2
16118-69810	30- - 1
16120-E3110	9- - 1
16120-36710	49- - 1
	70- - 1
16121-21005	89- - 2
16121-21615	9- - 1
	49- - 1
16121-72810	70- - 1
	70- - 2
16122-73011	70- - 2
16122-73015	9- - 1
	49- - 1
16124-B0105	89- - 1
16124-B5060	9- - 4
	9- - 5
	28- - 2
	49- - 4
	70- - 2
	70- - 8
16125-23010	9- - 1
	30- - 1
	49- - 1
16125-35000	89- - 3
16125-73011	70- - 3
16126-10560	9- - 2
	49- - 2
	70- - 4
16126-31300	89- - 1
16127-73011	70- - 2
16127-78500	9- - 4
	30- - 1
	49- - 4
16128-73011	70- - 7
16129-21005	89- - 2
16129-35000	89- - 3
16129-71211	70- - 7
16129-73011	70- - 7
16129-73012	70- - 4
16129-73013	70- - 3
	70- - 7
16129-73015	9- - 4
	49- - 4
16129-75515	9- - 4
	49- - 4
16130-35000	89- - 2
	89- - 3
16130-73011	9- - 2
	49- - 2
16131-A3510	49- - 5
16132-85060	70- - 1
16133-74505	89- - 1
16134-73011	70- - 1
16137-A0110	9- - 2
	49- - 2
16137-23010	30- - 3
16137-36700	89- - 2
16137-73010	70- - 1
16137-73710	70- - 1
	70- - 6
16138-A0110	9- - 2
	49- - 2
16138-74000	89- - 4
16139-31300	89- - 2
	89- - 4
16140-73011	30- - 2
	70- - 4
16140-74000	89- - 1
16141-71210	70- - 6
16143-A0110	9- - 3
	49- - 3
16143-32200	89- - 4
16143-73012	30- - 3
	70- - 3
16144-A0110	9- - 1
	49- - 1
16144-21005	89- - 2
16144-23010	30- - 1
16144-73011	70- - 2
16145-31301	89- - 1
	89- - 2
16145-50000	9- - 1
	30- - 1
	49- - 1
	70- - 2
16148-35010	9- - 3
	30- - 2
	49- - 3
	70- - 3
16151-A0110	9- - 3
	49- - 3
16151-E3001	9- - 3
	49- - 3
16151-73011	30- - 2
	70- - 3
16153-A3510	9- - 3
	49- - 3
16153-73010	9- - 3
	49- - 3
16154-73011	70- - 3
16154-73012	9- - 3
	30- - 2
	49- - 3
16156-35000	89- - 4
16160-A0111	30- - 3
16160-73011	9- - 4
	30- - 3
	49- - 5
	70- - 2
16160-73012	9- - 4

© 1972 NISSAN MOTOR CO., LTD.

REVISED: DECEMBER, 1972

PRINTED IN JAPAN

PART NUMBER INDEX

PUB. NO. C-0020

(CLASSIFIED BY PART NO.)

PART NO.	PAGE
16160-73012	49- - 5
	70- - 2
16160-74000	89- - 5
16162-36702	89- - 5
16164-E3010	12- - 1
	52- - 1
16164-21005	89- - 2
16164-73015	9- - 2
	49- - 2
16165-69205	89- - 5
16170-21610	9- - 4
	49- - 4
16170-35000	89- - 4
16172-35010	9- - 1
	49- - 1
	70- - 2
16174-34202	9- - 5
	28- - 2
	30- - 3
	49- - 5
	68- - 3
	87- - 2
16175-73011	70- - 6
16180-A0110	49- - 1
16180-E3110	9- - 1
16182-A3711	9- - 5
16182-65010	28- - 2
	70- - 7
16182-65011	28- - 2
	70- - 8
16189-35000	89- - 3
16191-23010	9- - 3
	49- - 3
	70- - 6
16191-31301	89- - 3
	89- - 3
16192-73601	89- - 1
16193-23012	9- - 1
	30- - 1
	49- - 1
16193-73011	70- - 2
16194-84700	89- - 2
16195-74500	89- - 4
16204-08000	30- - 2
16204-84700	89- - 3
16208-35010	9- - 2
	49- - 2
16209-08110	70- - 4
16209-75510	9- - 3
	30- - 2
16209-75510	49- - 3
16214-21005	89- - 4
16215-31300	89- - 2
16215-36700	89- - 4
16217-31300	89- - 2
16219-11200	89- - 3
	89- - 4
16223-08110	70- - 7
16224-58000	9- - 3
	49- - 3
	70- - 3
	70- - 4
	70- - 7
	70- - 7
16227-E3110	9- - 4
	49- - 4
16245-35000	89- - 4
16248-36700	89- - 5
16253-20610	49- - 4
16257-73700	70- - 7
16258-E3001	9- - 5
16258-E3051	9- - 5
16258-73500	110- - 1
16258-73501	108- - 3
16258-73700	70- - 8
16258-75500	28- - 2
16267-73011	70- - 7
16271-73011	70- - 6
16272-14810	9- - 3
	30- - 1
	49- - 3
16272-31300	89- - 3
	89- - 3
16272-36710	70- - 6
16276-73011	70- - 1
16276-73711	70- - 1
16276-73715	9- - 1
	49- - 1
16277-23010	9- - 4
	30- - 1
	49- - 4
16277-36702	89- - 1
16277-69810	30- - 1
16277-73011	70- - 1
16277-73012	70- - 4
16283-36702	89- - 2
16285-84700	89- - 3
16286-74505	89- - 3
16293-A0110	9- - 1
	49- - 1
16293-84704	89- - 1
16294-73011	70- - 7
16302-A0110	9- - 4
	49- - 4
16302-A3510	9- - 3
	49- - 3
16302-73012	30- - 2
	70- - 3
16307-73011	70- - 3
16307-73012	9- - 3
	30- - 2
	49- - 3
16310-84700	89- - 2
16311-0101P	89- - 2
16311-61000	9- - 4
	49- - 4
	70- - 6
16313-21615	9- - 3
	49- - 3
16313-69200	89- - 1
16313-69810	30- - 2
16314-35000	89- - 1
16314-73011	70- - 4
16315-73012	9- - 2
	49- - 2
16320-74505	89- - 2
16321-36700	89- - 1
16321-73011	9- - 3
	49- - 3
	70- - 4
16331-36700	89- - 4
16331-73700	71- - 1
16331-74500	89- - 4
16332-73700	71- - 1
16333-73700	71- - 2
16334-36700	89- - 4
16335-32200	89- - 4
16370-75500	28- - 3
16377-21005	89- - 2
16378-71210	70- - 4
16383-36702	89- - 2
16383-73400	28- - 3
16388-73013	68- - 3
	70- - 7
	70- - 7
	70- - 7
16390-75500	28- - 3
16391-75500	28- - 3
16397-71210	70- - 4
16400-A0600	11- - 1

© 1972 NISSAN MOTOR CO., LTD.

REVISED: DECEMBER, 1972

PRINTED IN JAPAN

B-C

PART NUMBER INDEX

(CLASSIFIED BY PART NO.)

PUB. NO. C-0020

PART NO.	PAGE
16400-A0600	51- - 1
16400-E3000	51- - 1
16400-25900	32- - 1
	72- - 1
	91- - 1
16400-37700	113- - 1
16400-78000	11- - 1
16401-37700	113- - 1
16402-32200	92- - 2
16402-37700	113- - 1
16403-32200	92- - 1
16403-37700	113- - 1
16404-78225	92- - 1
16405-37500	113- - 1
16406-37700	113- - 1
16407-32200	92- - 2
16407-37700	113- - 1
16409-E3001	12- - 2
	52- - 2
16413-37500	113- - 1
16414-37500	113- - 1
16415-37700	113- - 1
16415-73400	33- - 2
16419-E3000	11- - 1
	51- - 1
16419-E3001	11- - 1
	51- - 1
16419-28200	133-A- 1
	213- - 3
	243- - 2
16419-37601	113- - 2
16420-E0100	33-A- 1
	73-A- 1
	73-A- 2
	92-A- 1
	145-B- 6
16420-E3010	12- - 1
	52- - 1
16420-E3011	12- - 1
	52- - 1
16420-E3020	145- - 7
	146- - 6
16420-14500	33-A- 1
	73-A- 1
	73-A- 2
	92-A- 1
16420-21000	33- - 1
	92- - 2
16420-21001	33- - 2
	92- - 2
16420-30100	73- - 1
16420-73400	33- - 2
16421-37500	113- - 1
16422-37700	113- - 1
16424-37700	113- - 1
16425-37700	113- - 2
16425-37701	113- - 2
16426-37700	113- - 1
16426-37701	113- - 2
16428-37700	113- - 1
16428-37701	113- - 1
16439-A0600	133- - 1
16439-A0601	33-A- 1
	133- - 1
	133-A- 1
16439-04101	92-A- 1
16439-22100	32- - 1
	32- - 1
	33-A- 1
	72- - 1
	72- - 1
	91- - 1
	91- - 1
	132- - 2
	133- - 1
	133- - 2
	133-A- 2
16439-25900	32- - 1
	72- - 1
	73-A- 2
	91- - 1
	92-A- 1
16440-E0101	32- - 1
16440-E1000	91- - 1
16440-E3002	11- - 1
	51- - 1
16440-E3122	11- - 1
16440-37010	92- - 2
16441-E0700	133-A- 1
16442-29000	113- - 1
16442-90000	113- - 1
16443-90000	113- - 1
16449-90000	113- - 1
16451-90000	113- - 1
16454-90000	113- - 1
16455-82016	30- - 3
16455-69810	30- - 3
16455-90000	113- - 1
16465-82016	30- - 3
16465-69810	30- - 3
16475-A8410	30- - 3
16475-69810	30- - 3
16500-E1200	63- - 1
16500-E3000	10- - 1
	50- - 1
16500-E3120	10- - 1
16500-p0110	50- - 1
16500-p0300	10- - 1
	50- - 1
16500-p0305	50- - 1
16500-73502	110- - 1
16500-75500	31- - 1
16500-78000	71- - 1
16500-78010	71- - 1
16500-78200	90- - 1
16523-23000	10- - 1
	50- - 1
16523-73600	90- - 1
16523-78000	31- - 1
	71- - 1
16526-E3000	10- - 1
	50- - 1
16526-37700	110- - 1
16526-66000	31- - 1
16526-73600	90- - 1
16528-E3000	10- - 1
	50- - 1
16528-E3400	145-B- 4
16528-78200	146-B- 1
16528-78201	145-B- 1
16533-62210	31- - 1
	71- - 1
	90- - 1
	110- - 1
16533-66210	10- - 1
	50- - 1
16536-73000	10- - 1
	31- - 1
	50- - 1
	71- - 1
	110- - 1
16541-37500	118- - 1
16546-08025	10- - 1
	50- - 1
16546-23000	10- - 1
	50- - 1
16546-36725	31- - 1
	50- - 1
16546-37700	31- - 1
	110- - 1

© 1972 NISSAN MOTOR CO., LTD.

REVISED: DECEMBER, 1972

PRINTED IN JAPAN

B-C

PART NUMBER INDEX

(CLASSIFIED BY PART NO.)

PART NO.	PAGE
16546-62700	90- - 1
16546-73000	71- - 1
16546-73025	71- - 1
16547-73000	10- - 1
	31- - 1
	50- - 1
	71- - 1
16547-73600	90- - 1
16548-21001	10- - 1
	50- - 1
16548-37501	110- - 1
16548-73000	71- - 1
16548-73400	31- - 1
16549-37701	110- - 1
16550-62700	90- - 1
16551-08000	10- - 1
	50- - 1
	71- - 1
16560-73000	10- - 1
	31- - 1
	50- - 1
	71- - 1
	90- - 1
16561-13900	31- - 1
	90- - 1
16561-14800	71- - 1
	110- - 1
16561-36700	10- - 1
	50- - 1
16561-36701	10- - 1
	50- - 1
16568-08000	10- - 1
	50- - 1
	71- - 1
16571-73600	90- - 1
16571-75500	31- - 1
16571-78000	71- - 2
16572-10801	4- - 3
	44- - 3
	47- - 2
16572-44200	4- - 3
	31- - 1
	47- - 2
	71- - 2
	90- - 2
16572-78100	31- - 1
16573-E3001	10- - 1
	50- - 1
16573-73500	110- - 1
16573-73600	90- - 1
16573-75501	31- - 1
16574-73000	71- - 1
16574-73600	90- - 1
16574-75500	31- - 1
16597-70000	90- - 1
16598-73600	31- - 1
	90- - 1
	90- - 1
16600-37502	114- - 1
16610-37503	114- - 1
16611-37501	114- - 1
16612-37500	114- - 3
16613-37500	114- - 1
16613-37501	114- - 1
16613-37502	114- - 1
16613-37503	114- - 1
16613-37504	114- - 1
16613-37505	114- - 1
16613-37506	114- - 1
16613-37507	114- - 1
16613-37508	114- - 1
16613-37509	114- - 1
16613-37510	114- - 1
16613-37511	114- - 1
16613-37512	114- - 1
16613-37513	114- - 1
16613-37514	114- - 1
16613-37515	114- - 1
16613-37516	114- - 1
16613-37517	114- - 1
16613-37518	114- - 1
16613-37519	114- - 1
16613-37520	114- - 2
16613-37521	114- - 2
16613-37522	114- - 2
16613-37523	114- - 2
16613-37524	114- - 2
16613-37525	114- - 2
16613-37526	114- - 2
16613-37527	114- - 2
16613-37528	114- - 2
16613-37529	114- - 2
16613-37700	114- - 3
16613-76200	114- - 2
16613-76201	114- - 2
16613-76202	114- - 2
16613-76203	114- - 2
16613-76204	114- - 2
16613-76205	114- - 2
16613-76206	114- - 2
16613-76207	114- - 2
16613-76208	114- - 2
16613-76209	114- - 2
16613-76210	114- - 2
16613-76211	114- - 2
16613-76212	114- - 2
16613-76213	114- - 3
16613-76214	114- - 3
16613-76215	114- - 3
16613-76216	114- - 3
16613-76217	114- - 3
16613-76218	114- - 3
16613-76219	114- - 3
16613-76220	114- - 3
16613-76221	114- - 3
16613-76222	114- - 3
	114- - 3
16613-76224	114- - 3
16613-76225	114- - 3
16613-76226	114- - 3
16613-76227	114- - 3
16613-76228	114- - 3
16613-76229	114- - 3
16615-37500	114- - 3
16616-37500	114- - 3
16620-37501	114- - 4
16620-37502	114- - 4
16624-37500	114- - 4
16626-37500	114- - 4
16627-37500	114- - 4
16629-37500	114- - 3
16629-37501	114- - 3
16635-37500	114- - 4
16640-37501	116- - 1
16640-37503	116- - 1
16641-37501	116- - 1
16643-37500	116- - 1
16644-90000	116- - 1
16645-37501	116- - 1
16647-37500	116- - 1
16648-37501	116- - 1
16649-37500	116- - 1
16650-37500	116- - 1
16651-37500	116- - 1
16652-37500	116- - 1
16653-37500	116- - 1
16655-37501	116- - 1
16656-37500	116- - 1
16657-37500	116- - 1
16658-37500	116- - 1

© 1972 NISSAN MOTOR CO., LTD.

REVISED: DECEMBER, 1972

PRINTED IN JAPAN

B-C

PART NUMBER INDEX

(CLASSIFIED BY PART NO.)

PUB. NO. C-0020

PART NO.	PAGE
16659-37500	116- - 1
16660-37500	116- - 1
16663-37500	116- - 1
	116- - 1
16669-37500	114- - 4
16670-37500	114- - 4
16671-37500	114- - 4
16672-37500	114- - 4
16673-37500	114- - 4
16674-37500	114- - 4
16675-37500	114- - 4
16676-61500	118- - 2
16677-37500	103- - 3
16680-37500	114- - 4
16681-37500	114- - 4
16682-37500	114- - 4
16683-37500	114- - 4
16686-37500	114- - 4
	114- - 4
16687-37500	114- - 4
16700-37702	115- - 1
16701-37500	118- - 2
16702-37500	103- - 2
16702-37501	103- - 2
16703-37500	115- - 1
16711-37500	115- - 1
16712-37500	115- - 1
16713-37500	115- - 1
16714-37501	115- - 3
16715-37500	115- - 3
16716-37500	115- - 1
16718-37501	115- - 3
16719-37501	115- - 3
16720-37500	115- - 3
16722-37500	115- - 3
16723-37501	115- - 3
16724-37501	115- - 3
16726-37500	115- - 1
16727-37500	115- - 1
16729-37501	115- - 1
16729-86000	115- - 1
16730-37500	116- - 2
16731-37500	116- - 2
16732-37500	108- - 2
	116- - 2
16738-37500	115- - 2
16739-37500	115- - 2
16740-37500	115- - 2
16741-37500	115- - 2
16741-37501	115- - 2
16741-37502	115- - 2
16741-37503	115- - 2
16741-37504	115- - 2
16741-37505	115- - 2
16742-37500	115- - 2
16743-37500	115- - 2
16744-37500	115- - 2
16745-37500	115- - 1
16746-37500	115- - 1
16747-37501	115- - 1
16748-37500	115- - 1
16749-37501	115- - 1
16750-37500	115- - 1
16751-37500	115- - 1
16752-37500	115- - 3
16753-37500	115- - 2
16754-37501	115- - 2
16756-37500	115- - 3
	116- - 1
	116- - 1
16757-37501	115- - 3
16758-37500	115- - 3
16759-37500	115- - 1
16760-37500	115- - 1
16764-37500	115- - 3
16765-37500	115- - 3
	115- - 3
16766-37500	115- - 1
16767-37500	115- - 1
16768-37500	115- - 1
16769-37500	115- - 2
16770-37500	115- - 2
16772-37500	115- - 1
16773-37500	115- - 2
16776-37500	115- - 2
16777-37500	115- - 2
16778-37500	115- - 2
16782-37500	115- - 2
16797-37501	115- - 2
16810-37501	118- - 1
16811-37500	118- - 1
16817-37700	113- - 2
	116- - 2
16818-37700	113- - 2
16821-37501	118- - 1
16822-37500	118- - 1
16822-37501	118- - 1
16822-37502	118- - 1
16823-37501	118- - 1
16824-37500	118- - 1
16825-37500	118- - 1
16826-37500	118- - 1
16826-37501	118- - 1
16826-37502	118- - 1
16826-37503	118- - 1
16826-37504	118- - 1
16826-37505	118- - 1
16826-37506	118- - 1
16826-37507	118- - 1
16827-37500	118- - 1
16828-37500	118- - 1
16829-37500	118- - 1
16830-37500	118- - 1
16831-37500	118- - 1
16845-37500	115- - 2
16885-90001	108- - 2
16950-78201	89- - 5
16952-78200	89- - 5
17010-E0100	33- - 1
17010-F0110	73-A- 2
17010-E0111	33-A- 1
	73-A- 1
	92-A- 1
	145- - 2
	145- - 7
	145-A- 3
	145-B- 6
	145-C- 6
	146- - 1
	146- - 6
	146-A- 3
17010-E0200	73- - 1
17010-E0701	92- - 1
17010-E3010	52- - 1
17010-F3011	12- - 1
	52- - 1
17010-F3012	12- - 1
	52- - 1
17010-E3013	12- - 1
	52- - 1
17015-32200	92- - 1
17015-69010	33- - 1
17016-00100	33- - 1
	92- - 1
17019-00100	33- - 1
	92- - 1
17019-50000	33- - 1
17019-85060	33- - 1
17020-E0111	145- - 7
	145-B- 6

© 1972 NISSAN MOTOR CO., LTD.

REVISED: DECEMBER, 1972

PRINTED IN JAPAN

PART NUMBER INDEX

PUB. NO. C-0020

(CLASSIFIED BY PART NO.)

PART NO.	PAGE
17020-E0111	146- - 6
17020-E3010	12- - 1
	52- - 1
17020-85060	33- - 1
	73- - 1
	92- - 1
17030-E0200	145-A- 3
	146-A- 3
17030-E0605	145- - 1
	146- - 1
17030-E0705	145-B- 2
	146-B- 2
17030-E1200	73-A- 1
17030-E1315	92-A- 1
17030-E1400	73-A- 2
17030-E1805	33-A- 1
17030-E3225	145- - 7
	145-C- 6
	146- - 6
17047-13910	33- - 1
	73- - 1
	92- - 1
17048-13910	33- - 1
	73- - 1
	92- - 1
17052-E3010	12- - 1
	52- - 1
17052-36710	73- - 1
	92- - 1
17052-36711	73- - 1
	92- - 1
17052-73410	33- - 1
17053-E3010	12- - 1
	52- - 1
17053-32201	33- - 1
	73- - 1
	92- - 1
17061-E3010	12- - 1
	52- - 1
17061-50000	33- - 1
	73- - 1
	92- - 1
17065-13210	33- - 1
	73- - 1
17065-21016	12- - 1
	52- - 1
17072-21015	12- - 1
	52- - 1
17072-32200	73- - 1
	92- - 1
17072-73410	33- - 1
17075-13210	33- - 1
	73- - 1
17075-50000	92- - 1
17076-13211	33- - 1
	73- - 1
17076-21016	12- - 1
	52- - 1
17078-36000	92- - 1
17082-13211	73- - 1
17087-32201	92- - 1
17088-32200	92- - 1
17088-37000	92- - 1
17089-13210	33- - 1
	73- - 1
	73- - 1
	92- - 1
17089-21005	12- - 1
	12- - 1
	52- - 1
	52- - 1
17090-32200	33- - 1
	73- - 1
	73- - 1
	92- - 1
17097-18400	73- - 2
17099-A0600	33- - 1
	92- - 2
17099-E3010	12- - 1
	52- - 1
17099-E3011	12- - 1
	52- - 1
	145- - 7
	146- - 6
17099-E3012	12- - 1
	52- - 1
	145- - 7
	146- - 6
17099-30000	33-A- 1
	73- - 1
	73-A- 1
	73-A- 2
	92-A- 1
17099-69000	33- - 1
	92- - 2
17103-E3010	12- - 1
	52- - 1
17103-E3011	12- - 1
	52- - 1
17103-12200	33- - 1
17103-12200	73- - 1
	92- - 1
17103-25910	92- - 1
17106-E0101	33-A- 1
17106-E0700	92-A- 1
17106-E3000	11- - 1
17106-66800	65- - 2
17106-73401	25- - 3
	33- - 2
17106-73610	92- - 2
17106-77700	32- - 1
	33- - 2
17107-E0700	92-A- 1
17111-A0100	51- - 1
17111-A0600	32- - 1
	92-A- 1
17111-E0200	72- - 1
17111-E3400	32- - 1
	92-A- 1
17111-22000	32- - 1
	92-A- 1
17113-E0201	65- - 2
	72- - 1
17114-E0200	73-A- 1
	73-A- 2
17160-E0110	73-A- 2
17160-E0111	33-A- 1
	73-A- 1
	92-A- 1
17164-E0111	33-A- 1
17201-E0101	132- - 1
17201-E0301	132- - 1
17201-E0401	132-A- 1
17201-E0501	132-A- 1
17201-E0902	132- - 1
17201-E0903	132- - 1
17201-E3500	132-A- 1
17201-E3501	132-A- 1
17201-E3502	132-A- 1
17201-E3503	132-A- 1
17201-E3505	132-A- 1
17201-E3506	132-A- 1
17220-E0401	132-A- 1
17220-E3500	132-A- 1
17220-69001	132- - 2
17222-E0400	132-A- 1
17226-E0400	132-A- 2
17226-P0800	132-A- 2
17228-E0401	132-A- 1
17228-E3500	132-A- 2

© 1972 NISSAN MOTOR CO., LTD.

REVISED: DECEMBER, 1972

PRINTED IN JAPAN

B-C

PART NUMBER INDEX

PUB. NO. C-0020

(CLASSIFIED BY PART NO.)

PART NO.	PAGE
17229-E0100	132- - 2
17229-E0402	132-A- 1
17237-E0400	132-A- 1
17250-69001	132- - 2
	272- - 3
17251-21001	132-A- 1
17270-E0100	132- - 1
17270-E0101	132- - 1
17270-E0400	132-A- 2
17270-E0401	132-A- 2
17270-E0901	132- - 1
17270-E3210	132- - 1
17270-E3410	132- - 1
17270-E3510	132-A- 2
17279-E0100	132- - 1
	132-A- 2
17279-E0101	132- - 1
	132-A- 2
17307-76200	104- - 1
17307-76201	104- - 1
17312-14800	132- - 1
	132-A- 1
17323-E0400	132-A- 2
17331-E3500	132-A- 2
17333-E0101	132- - 2
17333-E3500	132-A- 2
17334-69000	132- - 2
17335-E0100	132- - 2
17342-18000	132- - 2
	132-A- 1
17343-14801	132- - 2
	132-A- 1
17348-E3500	132-A- 2
17433-F3502	132-A- 2
17433-E3520	132-A- 2
17440-F0100	132- - 2
17450-73000	132- - 2
17502-E0102	133- - 1
17503-E0100	133- - 1
17503-E0400	133- - 1
17504-F0900	133-A- 1
17507-E0901	133-A- 1
17509-E0900	133-A- 2
17510-F0102	133- - 2
	133-A- 1
17510-F3200	133- - 2
	133- - 2
	133-A- 1
17512-E0100	133- - 2
	133-A- 1
17512-E0400	133- - 2
17513-E0900	133-A- 1
17513-E3410	133-A- 1
17515-H1804	32- - 1
	33- - 2
17517-89900	133- - 1
17517-89901	145- - 7
	145-B- 4
	146- - 7
17517-89902	133- - 1
17517-89904	133- - 1
17518-B0400	33-A- 1
	73-A- 1
	92-A- 1
17518-E0101	133- - 1
17518-E0200	72- - 1
17518-E0300	133- - 2
	133-A- 1
17518-E0400	133- - 2
17518-E0900	133-A- 1
17518-E3200	133- - 2
17518-E3500	133- - 2
17518-09700	133- - 1
17518-89900	133-A- 1
17518-89901	133-A- 1
17519-E3201	133- - 2
17520-E3121	12- - 2
17520-E4100	12- - 2
	52- - 2
17520-E4103	12- - 2
	52- - 2
17522-E0200	73-A- 1
	73-A- 2
17522-E0600	33-A- 1
17522-E0700	92-A- 1
17522-E0701	91- - 1
	92- - 2
17522-E0702	91- - 1
	92- - 2
17522-E3000	12- - 2
	52- - 2
17522-E3400	145-B- 6
17522-73001	72- - 1
17522-75500	32- - 1
	33- - 2
17522-77700	33- - 2
	33- - 2
17522-78200	91- - 1
	92- - 2
17523-04100	33-A- 1
17523-04100	73-A- 1
	92-A- 1
17524-E3000	12- - 2
17525-78000	145- - 7
	145-B- 4
	146- - 7
17526-E0100	73-A- 2
	133- - 1
17526-22001	12- - 2
	52- - 2
17526-78000	133- - 1
17527-E0201	72- - 1
	73-A- 1
	73-A- 2
17527-E0600	32- - 1
	91- - 1
17527-E0705	92-A- 1
17527-F3007	11- - 1
	51- - 1
17527-E3004	11- - 1
	51- - 1
17527-E3121	11- - 1
17527-E3122	11- - 1
17527-73401	33- - 2
	33- - 2
17527-73600	91- - 1
17545-21000	73-A- 2
17571-F0900	133-A- 2
17572-73000	133- - 2
	133-A- 2
17576-E0100	133-A- 2
17577-73500	133- - 2
	133-A- 2
17938-21001	33-A- 1
	73-A- 1
	73-A- 1
	73-A- 2
	73-A- 2
	92-A- 1
	133-A- 1
	133-A- 1
17968-73805	9- - 2
	49- - 1
	123- - 1
18019-15800	195- - 2
	195- - 2
18020-10602	134- - 1
18100-E0110	134- - 1
18100-E1200	134- - 1
18100-E1210	134- - 1

© 1972 NISSAN MOTOR CO., LTD.

REVISED: DECEMBER, 1972

PRINTED IN JAPAN

PART NUMBER INDEX

(CLASSIFIED BY PART NO.)

PUB. NO. C-0020

PART NO.	PAGE
18100-73001	134- - 1
18105-73000	134- - 1
18110-E0110	134- - 1
18110-73000	134- - 1
18110-73003	134- - 1
18121-73001	134- - 1
18121-75000	134- - 1
18123-73000	134- - 1
18123-75000	134- - 2
18124-73000	28- - 3
	134- - 2
18125-73001	134- - 1
18127-E3200	134- - 1
18127-73000	134- - 1
18128-73002	134- - 1
18130-75000	134- - 5
18131-75000	134- - 2
18131-77700	134- - 2
18137-10600	28- - 3
	134- - 1
	134- - 2
18200-75001	134- - 2
18205-73501	108- - 3
18207-73500	108- - 3
18208-73500	108- - 3
18210-73002	134- - 2
18212-73400	134- - 2
18215-E0900	134- - 3
18215-73002	134- - 3
18218-U0100	134- - 2
18218-75000	134- - 2
18300-E0900	134- - 2
18300-E3000	134- - 2
18300-E3400	134- - 2
	134- - 5
18300-73003	134- - 2
18300-73502	134- - 2
18300-73601	134- - 2
18300-75501	134- - 2
18310-73001	134- - 3
18320-E3000	134- - 3
18320-73000	134- - 3
18320-73501	134- - 3
18320-73600	134- - 3
18320-75500	134- - 2
18321-E3000	134- - 3
18321-73002	134- - 3
18321-73500	134- - 3
18322-73500	134- - 3
18323-73500	134- - 3
18350-E1210	134- - 3
18410-E0700	134- - 4
18410-E1000	134- - 4
	134- - 4
18410-E1200	134- - 4
18410-E1800	134- - 4
18410-E1900	134- - 4
18415-E0100	134- - 4
18415-E0101	134- - 4
18417-15800	134- - 4
	134- - 4
18450-E0900	134- - 4
18450-E1900	134- - 4
18455-30000	23- - 2
	28- - 2
18462-E0900	134- - 4
18463-37700	134- - 4
18465-E0900	134- - 4
18466-37700	134- - 4
18470-E0900	134- - 4
18470-E1900	134- - 4
18480-E0900	134- - 4
18480-E1900	134- - 4
19200-37701	117- - 1
19202-37501	117- - 1
19203-37501	117- - 1
19204-37701	117- - 1
19205-37500	117- - 1
19206-37500	117- - 1
19207-37500	117- - 1
19208-37500	117- - 1
19209-37500	117- - 1
19211-37500	117- - 1
19212-37500	117- - 1
19212-37501	117- - 1
19214-37500	117- - 2
19215-37500	117- - 1
19215-37501	117- - 1
19216-37500	117- - 1
19217-37500	117- - 1
19218-37500	117- - 1
19220-37500	117- - 1
19226-37501	117- - 1
19232-37500	117- - 2
19235-61500	117- - 1
19236-73500	117- - 3
19240-37500	117- - 1
19241-37500	117- - 1
19241-37501	117- - 2
19241-37502	117- - 2
19241-37503	117- - 2
19241-37504	117- - 2
19241-37505	117- - 2
19243-37501	117- - 2
19245-37501	117- - 2
19246-37500	117- - 2
19247-37500	117- - 2
19248-37500	117- - 2
19250-37700	117- - 2
19251-37500	117- - 2
19253-37500	117- - 2
19255-37500	117- - 2
19258-37500	117- - 2
19259-37500	117- - 2
19261-37500	117- - 2
19262-37501	117- - 2
19262-37502	117- - 2
19265-37500	117- - 2
19266-37500	117- - 2
19268-37500	117- - 3
19268-86000	117- - 3
19269-37700	108- - 3
19270-37500	108- - 3
	117- - 3
19271-37700	117- - 3
19293-90005	117- - 3
19321-73501	117- - 3
19322-73501	108- - 3
	117- - 3
19323-37500	108- - 1
19323-37501	108- - 1
19324-37500	105- - 2
19352-90004	108- - 2
19379-90001	117- - 1

© 1972 NISSAN MOTOR CO., LTD.

REVISED: DECEMBER, 1972

PRINTED IN JAPAN

B-C

PART NUMBER INDEX

(CLASSIFIED BY PART NO.)

PART NO.	PAGE
20000	
20010-E2350	131- - 1
20010-73502	131- - 1
20010-75650	131- - 1
20010-78550	131- - 1
20020-E3200	131- - 1
	131-A- 1
20020-78001	131- - 1
	131-A- 1
20100-E0100	131- - 3
20100-E0700	131- - 3
20100-E3200	131- - 3
20100-73201	131-A- 2
20132-32251	131- - 2
	131-A- 1
	131-A- 1
20133-32200	131- - 2
20200-E0110	131- - 2
20200-E0410	131-A- 2
20200-73600	131- - 2
20321-73000	131- - 4
20401-E0450	131-A- 2
20611-E3400	131- - 1
20611-73500	131- - 1
20611-78200	131- - 1
20613-73000	131- - 3
20621-73000	131- - 3
20621-73201	131-A- 2
20621-78001	131- - 2
20622-73201	131-A- 2
20623-73200	131-A- 2
20636-73000	131- - 4
	131-A- 1
20638-73000	131- - 3
	131- - 4
20645-73000	131- - 4
	131-A- 1
20646-73000	131- - 3
	131- - 4
20650-37700	131- - 1
	131- - 1
	131-A- 1
20653-73001	131- - 3
20654-73001	131- - 3
20655-73000	131- - 4
	131-A- 1
20661-73201	131-A- 2
20661-78200	131- - 2
20661-78201	131- - 2
20662-73251	131-A- 2
20664-78000	131- - 2
20664-78200	131- - 2
20671-73000	131- - 3
20671-73253	131-A- 2
20671-73600	131- - 4
20675-73201	131-A- 2
20675-73501	131- - 1
20675-73600	131- - 1
	131- - 1
20680-14850	131- - 3
20681-73000	131- - 3
20686-73000	131- - 3
20686-73600	131- - 3
20711-E3200	131- - 1
	131-A- 1
20712-73200	131- - 2
	131-A- 2
20721-73001	131- - 4
	131-A- 1
20722-73200	131-A- 1
	131-A- 3
21000-E3120	13- - 1
21000-E3125	13- - 1
21000-E3126	13- - 1
21010-E0101	34- - 1
21010-E0102	34- - 1
21010-E0125	34- - 1
21010-E3000	13- - 1
	53- - 1
21010-E3001	13- - 1
21010-E3025	13- - 1
21010-E3026	13- - 1
21010-37504	119- - 1
21010-37526	119- - 1
21010-69100	74- - 1
	145-A- 2
	146-A- 1
21010-69126	74- - 1
	145-A- 2
	146-A- 2
21010-73000	74- - 1
21010-73001	74- - 1
21010-73002	74- - 1
21010-73025	74- - 1
21010-73026	74- - 1
21010-78202	93- - 1
21010-78203	93- - 1
21010-78225	93- - 1
21010-78226	93- - 1
21010-85001	34- - 1
21010-85025	34- - 1
21012-01300	74- - 1
21013-37502	119- - 1
21013-73000	74- - 1
21014-E0100	34- - 1
21014-21000	13- - 1
	53- - 1
21014-37502	119- - 1
21014-73000	74- - 1
21014-73400	34- - 1
21014-78202	93- - 1
21016-73001	74- - 2
21022-E3001	13- - 1
	53- - 1
21022-37525	119- - 1
21022-73000	74- - 1
21022-73400	34- - 1
21026-14600	93- - 1
21026-37528	119- - 2
21026-62225	93- - 2
21026-73000	74- - 1
	119- - 1
21026-85000	13- - 1
	34- - 1
	53- - 1
	93- - 1
21027-61500	119- - 1
21027-62200	13- - 1
	34- - 1
	53- - 1
21027-73000	74- - 1
21035-J0200	104- - 1
21035-37502	119- - 1
21035-73000	74- - 1
21035-73400	34- - 1
21035-73402	13- - 1
	53- - 1
21043-37500	119- - 1
21043-73000	13- - 1
	34- - 1
	53- - 1
	74- - 1
21046-78200	93- - 1
21047-A0100	93- - 1
21047-B0700	93- - 1
21051-E0100	34- - 1
21051-E3000	53- - 1

© 1972 NISSAN MOTOR CO., LTD.

REVISED: DECEMBER, 1972

PRINTED IN JAPAN

PART NUMBER INDEX

PUB. NO. C-0020

(CLASSIFIED BY PART NO.)

PART NO.	PAGE
21051-E3200	13- - 1
	53- - 1
	145- - 4
	145-C- 6
	146- - 4
21051-37501	119- - 2
21051-38700	93- - 1
21051-66000	93- - 2
	145-B- 2
	145-B- 4
	146-B- 2
21051-73001	74- - 2
21054-E0100	34- - 1
21054-E3000	13- - 1
	53- - 1
21054-37503	119- - 1
21054-73000	74- - 1
21055-37500	119- - 1
21060-E0100	34- - 2
21060-E3000	53- - 1
	74- - 2
21060-E3120	13- - 2
21060-E3201	13- - 1
	53- - 2
	145- - 4
	145-C- 6
	146- - 4
21060-37700	119- - 2
21060-61202	93- - 2
	145-B- 2
	145-B- 4
	146-B- 2
21060-61203	93- - 2
	145-B- 2
	145-B- 4
	146-B- 2
21060-61700	119- - 2
21060-69200	93- - 1
21060-73000	74- - 2
21060-73500	119- - 2
21060-73701	74- - 2
21060-78000	145-A- 2
	146-A- 2
21063-73501	119- - 2
21063-73502	119- - 2
21064-E3000	53- - 1
21064-73500	119- - 2
21067-10800	145-A- 1
	146-A- 1
21067-37602	119- - 2
21067-38700	93- - 2
	145-B- 1
	145-B- 6
	146-B- 1
21067-73002	74- - 2
21069-61500	119- - 2
21069-73000	53- - 1
	74- - 2
	93- - 2
21074-37501	119- - 1
21074-69200	93- - 1
21074-73000	74- - 2
	145-A- 2
	146-A- 2
21078-21002	13- - 1
	53- - 1
21079-21002	13- - 1
	53- - 1
21082-E0100	34- - 2
21082-E3200	13- - 2
	53- - 2
	145- - 4
	145-C- 7
	146- - 4
21082-P0525	93- - 2
	145-B- 2
	145-B- 4
	146-B- 2
21082-R1025	13- - 2
	53- - 2
	145- - 4
	145-C- 7
	146- - 4
21082-78200	93- - 2
	145-B- 2
	145-B- 4
	146-B- 2
21089-61000	74- - 3
21090-61000	74- - 3
21090-73401	74- - 3
21090-73700	74- - 3
21107-E4200	83- - 4
	122- - 4
21116-78500	53- - 1
21200-A3001	4- - 3
	44- - 3
21200-76202	105- - 2
21200-76203	105- - 2
21200-76204	105- - 2
21200-78500	25- - 2
21200-78500	65- - 2
	84- - 2
21200-78502	4- - 3
	25- - 2
	44- - 3
	65- - 2
	84- - 2
21200-78503	25- - 2
	65- - 2
	84- - 1
21200-78505	25- - 2
	65- - 2
	84- - 2
21200-78506	25- - 2
	65- - 2
	84- - 2
21202-76200	105- - 2
21208-96000	105- - 2
21211-12601	103- - 3
21211-18000	83- - 2
21211-73400	23- - 1
	64- - 3
21300-E1700	24- - 1
21300-J0200	104- - 1
21300-69800	24- - 1
21300-76200	104- - 1
21301-76200	104- - 1
21304-76200	104- - 1
21305-E1700	24- - 1
21305-69800	24- - 1
21305-76200	104- - 1
21306-E1700	24- - 1
21306-61520	104- - 1
21307-E1700	24- - 1
21307-76200	104- - 1
21308-76201	104- - 1
21309-76201	104- - 1
21310-76200	104- - 1
21320-76200	104- - 1
21331-76200	104- - 1
21355-E1700	24- - 1
21356-F1700	24- - 1
21383-90004	119- - 2
21383-90009	104- - 1
21400-E0100	135- - 1
21400-E0101	135- - 1
21400-E0200	135- - 1
21400-E0210	135- - 1
21400-E0211	135- - 1
21400-E3000	135- - 1

B-C

PRINTED IN JAPAN

© 1972 NISSAN MOTOR CO., LTD.

REVISED: DECEMBER, 1972

PART NUMBER INDEX

(CLASSIFIED BY PART NO.)

PUB. NO. C-0020

PART NO.	PAGE
21400-E3200	135- - 1
21400-E3400	135- - 1
21430-C0500	135- - 2
21430-E3000	135- - 2
21430-10600	135- - 1
21430-62200	135- - 1
21475-E0100	135- - 2
21475-E0210	135- - 2
21475-E0700	135- - 3
21475-E0900	135- - 3
21475-F3000	135- - 2
	135- - 3
	145- - 4
	146- - 4
21475-E3500	135- - 3
21480-18000	135- - 2
21481-18000	135- - 2
21500-E0100	135- - 1
21500-E0101	135- - 1
21500-E0110	135- - 1
21500-F0210	135- - 1
21500-E0211	135- - 1
21500-E3000	135- - 1
21500-E3200	135- - 1
21501-E0102	135- - 2
21501-F0203	135- - 2
21501-E0702	135- - 2
21501-E0902	135- - 2
21501-E3000	135- - 2
21503-E0102	135- - 2
21503-F0201	135- - 2
21503-E0702	135- - 2
21503-E0902	135- - 2
21503-E3000	135- - 2
21505-78500	7- - 2
21506-28001	135- - 2
21510-F0100	135- - 3
21510-E3000	135- - 3
21510-E3200	135- - 3
21511-E0100	135- - 4
21511-E3000	135- - 4
21512-F0100	135- - 3
21512-E3200	135- - 3
21515-E0101	135- - 4
21515-E3200	135- - 4
21516-C0500	135- - 3
21621-E0100	135- - 4
21621-E0200	135- - 4
21621-E3000	135- - 4
21623-E0100	135- - 4
21623-E0200	135- - 4
21623-E3000	135- - 4
21631-E0101	135- - 4
21632-E0102	135- - 4
22100-E3001	121- - 1
22100-E3011	121- - 1
22100-E3101	121- - 1
22100-E3111	121- - 1
22100-69805	121-A- 1
22100-71305	121-C- 1
22100-71306	121-C- 1
	123-C- 1
22100-73005	121-B- 1
22101-14605	121-A- 1
22102-00801	121- - 2
	121-A- 1
	121-B- 1
	121-C- 1
22103-18005	121- - 2
	121-B- 1
	124- - 1
	124-D- 2
22108-21005	121- - 1
22108-71300	121-C- 1
22108-73400	121-A- 1
22109-71300	121- - 1
	121-A- 1
	121-B- 1
	121-C- 1
22110-E3000	121- - 1
22110-E3100	121- - 1
22110-71201	121-B- 1
22110-71301	121-C- 1
22110-73400	121-A- 1
22118-85060	121- - 1
	121-A- 1
	121-B- 1
	121-C- 1
22119-H2700	121- - 1
	121-A- 1
22119-13201	121-B- 1
22119-18000	121-B- 1
22119-71300	121-C- 1
22119-73400	121- - 1
	121-A- 1
22122-85060	9- - 4
	49- - 4
22132-E3100	121- - 1
22132-18005	121-C- 2
22132-22005	121- - 1
22132-62200	121-A- 1
22132-73005	121-B- 1
22132-76505	121-C- 1
22136-18005	121- - 1
	121-B- 1
	121-C- 1
22136-71300	121-A- 1
22139-18005	9- - 3
	49- - 3
	121- - 1
	121- - 2
	121- - 2
	121-B- 1
	121-B- 1
	121-B- 1
	121-C- 1
	121-C- 1
22139-85060	124-F- 2
22145-18005	121- - 1
	121-A- 1
	121-B- 1
	121-C- 1
22149-18005	121- - 1
	121-B- 1
22149-71300	121-C- 1
22156-85060	9- - 2
	49- - 2
	70- - 3
	70- - 4
	70- - 4
22157-H1000	121- - 2
	121-A- 1
	121-B- 1
	121-C- 1
22157-78500	121- - 2
	121-A- 1
	121-B- 1
	121-C- 1
22162-E3001	121- - 2
	121-A- 1
	121-B- 2
22162-21007	121-C- 2
22162-62200	121-A- 1
	121-B- 2
22162-71300	121-C- 2
22165-30101	121- - 2
	121-A- 2
	121-B- 2
	121-C- 2
22167-71300	121- - 1

© 1972 NISSAN MOTOR CO., LTD.

REVISED: DECEMBER, 1972

PRINTED IN JAPAN

PART NUMBER INDEX

PUB. NO. C-0020

(CLASSIFIED BY PART NO.)

PART NO.	PAGE
22167-71300	121-A- 1
	121-B- 1
	121-C- 1
22168-71300	121- - 1
	121-A- 1
	121-B- 1
	121-C- 1
22171-00800	121-A- 2
	121-B- 2
	121-C- 2
22175-A3800	67- - 1
	122-A- 1
22175-09400	67- - 1
	122-A- 1
22178-13200	122-B- 1
22178-21000	122- - 1
22178-37501	109- - 2
22178-73400	122-A- 1
22178-73600	122-C- 1
22179-E3000	122- - 1
	122-A- 1
	122-B- 1
	122-C- 1
22179-32200	122-A- 1
	122-B- 1
	122-C- 1
22179-37500	109- - 2
22180-13201	121-B- 2
	121-C- 2
22180-21000	121- - 2
22180-71200	122- - 1
	122-A- 1
	122-B- 1
	122-C- 1
22180-73400	121-A- 2
22182-71300	121- - 1
	121-B- 1
	121-C- 1
22183-71300	121- - 1
	121-B- 1
	121-C- 1
22185-85060	70- - 7
22201-18005	121- - 2
	121-B- 2
	121-C- 2
	124-B- 2
22201-71300	121-A- 2
22203-32210	123-A- 2
22203-50000	9- - 1
	49- - 1
22203-50000	70- - 2
22208-13200	122-A- 1
	122-B- 1
	122-C- 1
22248-A5502	121- - 2
22301-E3001	121- - 2
22301-E3101	121- - 2
22301-71301	121-C- 1
22301-73000	121-A- 1
	121-B- 1
22318-E3000	121- - 2
22318-E3001	121- - 2
22318-71500	122-C- 1
22318-73000	122-B- 1
22318-73001	122-B- 1
22318-73400	122-A- 1
22318-75500	122-A- 1
22328-21000	121- - 2
22401-A0200	122-B- 3
	122-C- 2
22401-A4616	122- - 1
	122-A- 2
22401-A4617	122- - 1
22401-A4704	122- - 1
22401-A4705	122- - 1
22401-A4706	122- - 1
	122-A- 2
22401-A4707	122- - 2
22401-A4805-01	122-B- 2
	122-C- 2
22401-E6610	122-B- 3
	122-C- 2
22401-10605	122-B- 3
	122-C- 2
22401-13200	122-B- 2
	122-C- 2
22401-21000	122- - 1
	122-A- 2
22401-21004	122- - 1
	122-A- 2
22401-21005	122- - 1
	122-A- 2
22401-21007	122- - 1
	122-A- 2
22401-32201	122-B- 2
	122-C- 2
22401-58000	122-B- 3
	122-C- 2
22401-58001	122-B- 3
	122-C- 2
22401-75500	122- - 1
	122-A- 2
22401-75504	122- - 1
	122-A- 2
22401-75507	122- - 1
22403-13201	121-A- 1
22403-18005	121- - 2
	121-B- 1
	121-C- 1
	121-C- 1
22421-10560	122-B- 2
22431-10560	122-C- 3
	145-A- 3
	146-A- 3
22433-14615	122-A- 2
	122-B- 3
22433-14616	122- - 1
	122-A- 2
	122-B- 3
22433-14805	122-C- 1
22433-14815	122-C- 1
22433-14816	122-C- 1
22450-E0100	122-A- 1
22450-E0200	122-B- 1
	122-B- 2
22450-E0225	122-B- 2
22450-E0226	122-B- 2
22450-E0227	122-B- 2
22450-E0725	122-C- 2
	122-C- 3
22450-E0729	122-C- 2
22450-E3000	122- - 3
22450-E3005	122- - 3
22450-65000	122-C- 2
	122-C- 3
22450-73025	122-B- 1
22450-73425	122-A- 1
22450-73427	122-A- 1
22450-78225	122-C- 2
	122-C- 3
22451-E1300	122-B- 1
22451-E3000	122- - 2
22451-E3001	122- - 2
22451-E3005	122- - 2
22451-66000	122-B- 1
	122-C- 2
	122-C- 3
22451-66001	122-B- 1
	122-C- 2
	122-C- 3

© 1972 NISSAN MOTOR CO., LTD.

REVISED: DECEMBER, 1972

PRINTED IN JAPAN

B-C

PART NUMBER INDEX

(CLASSIFIED BY PART NO.)

PART NO.	PAGE
22451-69200	145-B- 2
	145-B- 4
22451-73000	122-B- 1
22451-73010	122-B- 2
22451-73400	122-A- 1
22452-E1300	122-B- 1
22452-E3000	122- - 2
22452-N0700	122- - 2
22452-21000	122- - 2
22452-21001	122- - 2
22452-66000	122-C- 2
	122-C- 3
22452-66001	122-C- 2
	122-C- 3
22452-73000	122-B- 1
	122-B- 2
22452-73400	122-A- 1
22453-E3000	122- - 2
22453-N0700	122- - 2
22453-21000	122- - 2
22453-21001	122- - 2
22453-66000	122-C- 2
	122-C- 3
22453-66001	122-C- 2
	122-C- 3
22453-73000	122-B- 1
	122-B- 2
22453-73400	122-A- 2
22454-E3000	122- - 2
22454-E3001	122- - 2
22454-E3005	122- - 2
22454-66000	122-C- 3
	122-C- 3
22454-66010	122-C- 3
	122-C- 3
22454-73000	122-B- 1
	122-B- 2
22454-73400	122-A- 2
22455-E3000	122- - 2
22455-E3005	122- - 3
22455-73000	122-B- 2
	122-B- 2
22455-73400	122-A- 2
22456-E3000	122- - 3
22456-E3001	122- - 3
22456-E3002	122- - 3
22456-E3005	122- - 3
22456-73000	122-B- 2
	122-B- 2
22456-73400	122-A- 2
22460-14615	122- - 1
	122-A- 2
	122-B- 3
	122-B- 3
22470-73400	122-A- 1
22472-E3000	122- - 3
22472-E3001	122- - 3
22472-E3002	122- - 3
22472-E3003	122- - 3
22472-G0301	122-B- 2
22472-73400	122-A- 1
22473-E3000	122- - 3
23100-A4800	123- - 1
23100-A4810	145-B- 6
23100-P0101	123- - 1
23100-P0111	145-B- 6
23100-U0110	123-A- 1
23100-21015	123-A- 1
23100-73015	123-B- 1
23102-21010	123-A- 1
23102-21600	123- - 1
23102-73010	123-B- 1
23102-73500	123-C- 1
23107-73500	123-C- 2
23108-21010	123-A- 1
23108-21600	123- - 1
23108-73500	123-C- 1
23108-74112	123-B- 1
23109-30000	70- - 1
23109-35010	123-A- 2
23109-58000	9- - 4
	49- - 5
23110-14800	123- - 2
23110-73500	123-C- 1
23115-61201	123-C- 2
23115-66615	123-B- 2
23116-14610	123-A- 1
23116-73010	123-B- 1
23118-14610	123-A- 3
23118-21015	123-A- 2
23118-21605	123- - 1
23118-73015	123-B- 2
23118-73500	123-C- 2
23120-14610	123-A- 1
23120-14611	123-A- 2
23120-21000	123- - 1
23120-21600	123- - 1
23120-73010	123-B- 1
23120-73011	123-B- 2
23120-73500	123-C- 2
23121-21600	123- - 2
23122-21000	123- - 1
23123-21015	123-A- 2
23123-21605	123- - 1
23123-73500	123-C- 1
23123-73501	123-C- 2
23127-A4800	123- - 1
23127-21015	123-A- 1
23127-61500	123-C- 1
23127-73016	123-B- 1
23129-37601	123-C- 2
23130-37601	123-C- 2
23131-21605	123- - 2
23131-73016	123-B- 2
23131-73500	123-C- 2
23132-10605	124-B- 2
	124-C- 1
23132-18005	124-A- 2
23132-21015	123-A- 2
23132-61000	123-C- 2
23133-21010	123-A- 1
23133-73010	123-B- 1
23133-73011	123-B- 1
23133-73500	123-C- 1
23134-21010	123-A- 1
23135-21605	123- - 1
23135-73010	123-B- 1
	123-B- 2
23135-73500	123-C- 1
23136-A4800	123- - 1
23136-21010	123-A- 2
23136-73011	123-B- 2
	123-B- 2
23136-73500	123-C- 1
23138-18010	123-B- 1
	123-B- 2
23139-12211	70- - 3
	121-A- 1
	121-A- 1
	124-E- 1
	124-E- 2
23139-12900	122-A- 3
23139-18005	123- - 1
23139-21605	123- - 1
23139-37504	123-C- 1
23139-85060	70- - 3
	124-E- 1
23141-21015	123-A- 2
23147-21005	9- - 3
	49- - 3

© 1972 NISSAN MOTOR CO., LTD.

REVISED: DECEMBER, 1972

PRINTED IN JAPAN

PART NUMBER INDEX

PUB. NO. C-0020

(CLASSIFIED BY PART NO.)

PART NO.	PAGE
23147-21005	123- - 1
23147-73010	123-B- 1
23148-21605	123- - 2
23148-44020	70- - 4
23150-18010	123-A- 2
23150-21600	123- - 2
23150-66010	123-B- 2
23150-73500	123-C- 2
23152-12210	123-A- 2
23152-58000	123-C- 2
23153-09400	123-C- 2
23153-21000	123- - 2
23153-21010	123-B- 2
23156-18005	123- - 1
23156-21015	123-A- 1
23156-37504	123-C- 1
23156-73016	123-B- 1
23157-16501	123-C- 2
23157-73500	123-C- 1
23158-16716	123-A- 2
23158-21005	123- - 1
23158-21015	123-A- 1
23158-35010	123-A- 2
23158-73016	123-B- 1
23160-14800	123- - 1
	123- - 1
23160-16710	123-A- 2
23160-73500	123-C- 1
23161-61200	123-C- 1
23164-H0100	123- - 2
23164-12210	123-A- 2
23164-21610	123-A- 2
	123-B- 2
23164-61200	123-C- 2
23168-73000	122-B- 3
23168-76200	123-C- 2
23170-76200	123-C- 2
23174-37600	123-C- 2
23174-73000	122-B- 4
23174-73010	145-A- 2
	146-A- 2
23182-58000	123-C- 1
23184-21005	123- - 1
23184-71210	70- - 4
23185-21015	123-A- 1
23186-21015	123-A- 1
23189-18005	70- - 1
23195-12210	123-B- 2
23195-30000	123- - 2
	123-C- 1
23219-61000	123-C- 2
23230-21010	123-A- 1
23230-21011	123-A- 1
23230-21600	123- - 1
23230-21601	123- - 1
23230-73010	123-B- 1
23230-73011	123-B- 1
23230-73500	123-C- 1
23236-73500	123-C- 2
23238-73500	123-C- 1
23239-73500	123-C- 1
23240-73500	123-C- 1
23241-73500	123-C- 1
23300-E3000	124-D- 1
23300-E3001	124-D- 1
23300-E3100	124- - 1
23300-15805	124-B- 1
23300-37503	124-E- 1
23300-73005	124-C- 1
23300-73405	124-A- 1
23305-09500	124-B- 2
23305-21000	124- - 1
	124-D- 1
23306-E3100	124- - 1
23306-15800	124-B- 2
	124-C- 2
23306-37502	124-E- 2
23306-37503	124-E- 2
23306-78500	124-D- 1
23309-15805	124-A- 1
	124-B- 2
	124-C- 1
23310-E3000	124-D- 1
23310-E3001	124-D- 1
23310-E3100	124- - 1
23310-E3101	124- - 1
23310-E3102	124- - 1
23310-15801	124-A- 1
	124-B- 1
	124-C- 1
23310-37502	124-E- 1
	124-F- 1
23310-78500	124-D- 1
23312-10600	124- - 1
	124-A- 1
	124-B- 1
	124-C- 1
	124-D- 1
23312-10605	124- - 1
	124-A- 1
23312-10605	124-B- 1
	124-C- 1
	124-D- 1
23312-37502	124-E- 1
23318-E3000	124-D- 2
23318-E3100	124- - 2
23319-E3100	124- - 2
23319-10600	124-A- 1
	124-B- 2
	124-C- 1
23319-21000	124-D- 2
23319-37502	124-E- 2
23321-E3000	124- - 1
	124-D- 1
23321-09900	124- - 1
	124-A- 1
	124-B- 1
	124-D- 1
23321-37500	124-E- 1
23321-37502	124-E- 1
23322-10600	124-A- 1
	124-B- 2
	124-C- 1
23322-10601	124-A- 1
	124-B- 2
	124-C- 1
23322-21000	124- - 2
	124-D- 2
23322-21001	124- - 2
	124-D- 2
23322-37502	124-F- 2
23323-F3000	124- - 2
	124-D- 2
23323-10600	124-A- 1
	124-B- 2
	124-C- 1
23323-37502	124-E- 2
23330-37501	124-E- 1
23333-09900	124-B- 1
23333-21000	124- - 1
	124-D- 2
23333-37500	124-E- 1
23337-10600	124-C- 1
23337-10605	124-A- 1
	124-B- 1
23337-21000	124- - 1
	124-D- 1
23337-37502	124-F- 1
	124-E- 2
23337-37503	124-F- 1

B-C

PRINTED IN JAPAN

© 1972 NISSAN MOTOR CO., LTD.

REVISED: DECEMBER, 1972

PART NUMBER INDEX

(CLASSIFIED BY PART NO.)

PUB. NO. C-0020

PART NO.	PAGE
23337-37503	124-E- 2
23338-09900	124-A- 1
	124-B- 1
	124-C- 1
23338-21000	124- - 1
	124-D- 1
23338-37502	124-E- 1
23339-09900	124- - 1
	124-D- 1
23340-E3100	124- - 2
23340-15805	124-A- 1
	124-B- 1
	124-C- 1
23340-37502	124-E- 2
23340-78500	124-D- 2
23343-15801	124-B- 2
23343-15805	124-A- 2
	124-B- 2
	124-C- 2
23343-21005	124- - 2
	124-D- 2
23343-21006	124- - 2
	124-D- 2
23343-37502	124-E- 2
23344-21005	124- - 2
	124-D- 2
23345-E3000	124- - 2
23345-21000	124- - 2
	124-D- 2
23345-78500	124-D- 2
	124-D- 2
23353-10600	124- - 1
	124-A- 1
	124-B- 1
	124-C- 1
	124-D- 1
23353-37500	124-E- 2
23369-10600	124- - 1
	124-A- 1
	124-B- 1
	124-C- 1
	124-D- 1
23369-37502	124-E- 1
23370-09600	124- - 1
	124-A- 1
	124-B- 1
	124-C- 1
	124-D- 1
23370-21000	124-D- 1
23370-37502	124-E- 1
23372-10600	124-B- 1
23374-10600	124-B- 1
23375-37502	124-E- 1
23378-21005	124- - 1
	124-D- 1
23378-21006	124- - 1
	124-D- 1
23379-09900	124-A- 1
	124-B- 1
	124-C- 1
23379-21000	124- - 1
	124-D- 1
23379-37500	124-E- 1
23379-37502	124-E- 1
23380-10600	124-A- 1
	124-B- 1
	124-C- 1
23380-21000	124- - 1
	124-D- 1
23380-37502	124-E- 1
23380-37503	124-E- 1
23383-10600	124-A- 1
	124-B- 1
	124-C- 1
23383-37502	124-E- 2
23385-37502	124-E- 1
23390-18005	124-A- 2
	124-C- 2
23391-37500	124-F- 2
23391-43300	124-A- 1
	124-B- 2
	124-C- 1
23391-43600	123-C- 1
23441-10600	124-A- 1
	124-B- 1
	124-C- 1
23441-37500	124-F- 2
23441-37501	124-E- 1
23442-10600	124-B- 1
23445-E3000	124-D- 2
23445-15800	124-A- 2
	124-B- 2
	124-C- 2
23446-15800	124-B- 2
	124-C- 2
23446-37502	124-E- 2
23449-37500	124-F- 2
23450-10600	124-B- 1
23453-09500	124-B- 1
23465-E6800	124- - 1
23465-E6800	124-A- 1
	124-B- 1
	124-C- 1
23470-15800	124-B- 2
23480-M0100	124- - 2
	124-B- 2
	124-D- 2
23500-29901	122-B- 3
	123- - 2
	123-C- 3
23500-29902	122-B- 3
	123- - 2
	123-C- 3
23500-29911	122-A- 2
	122-C- 3
23502-30000	9- - 2
	49- - 2
	70- - 3
	70- - 4
	70- - 7
	70- - 7
23547-10605	124-B- 1
	124-C- 1
23547-18005	124-A- 1
24012-E0210	141- - 1
24012-E0215	141- - 1
24012-E0710	141- - 1
24012-E0715	141- - 1
24012-E0910	141- - 1
24012-E0915	141- - 1
24012-E1200	141- - 1
24012-E1205	141- - 1
24012-E1300	141- - 1
24012-E1305	141- - 1
24012-E1700	141- - 1
24012-E1705	141- - 1
24012-E1800	141- - 1
24012-E1805	141- - 1
24012-E1900	141- - 1
24012-E1910	141- - 2
24012-E3702	141- - 2
24013-E0211	141- - 2
24013-E0411	141- - 2
24013-E0911	141- - 3
24013-E1201	141- - 2
24013-E1401	141- - 2
24013-E1901	141- - 3
24013-E1905	141- - 3
24014-E0201	141- - 3
24014-E0300	141- - 3

© 1972 NISSAN MOTOR CO., LTD.

REVISED: DECEMBER, 1972

PRINTED IN JAPAN

PART NUMBER INDEX

(CLASSIFIED BY PART NO.)

PUB. NO. C-0020

PART NO.	PAGE
24014-E0400	141- - 3
24014-E1200	141- - 3
24014-E1300	141- - 3
	141- - 3
24014-E1400	141- - 3
24014-E1500	141- - 3
	141- - 3
24014-E3100	141- - 3
24022-E0100	141- - 2
24022-E3200	141- - 2
	141- - 2
	141- - 2
	141- - 2
	141- - 2
	141- - 2
24027-73400	141- - 2
24027-78000	141- - 2
24027-78200	89- - 5
24050-00800	133- - 2
24080-E0100	141- - 4
24080-E0900	141- - 4
	141- - 4
24080-E1200	141- - 4
	141- - 4
	141- - 4
24080-E1700	141- - 4
24080-E3300	141- - 4
24110-E0200	141- - 4
24110-E0900	141- - 5
24110-E1300	141- - 4
24110-E1700	141- - 4
24110-E3300	141- - 4
24110-E3401	141- - 5
24110-E3700	141- - 5
24157-E0400	141- - 3
24157-E0499	141- - 3
24160-E0100	141- - 4
24160-E0200	141- - 4
24160-E0300	141- - 3
24161-73400	141- - 3
24166-73000	141- - 3
24170-E0101	141- - 5
24170-E3200	141- - 5
24177-E0100	141- - 4
24177-E0200	141- - 4
	141- - 4
24210-89925	134- - 4
24210-89959	191- - 3
24219-E0101	133- - 1
24220-89903	150- - 2
24220-89912	133- - 3
	133- - 3
	133-A- 2
24220-89913	133- - 3
24220-89914	133- - 3
24220-89924	132-A- 2
24220-89936	145-A- 4
	150- - 2
24220-89938	163-D- 2
24220-89951	133- - 3
	133-A- 2
24250-E0100	141- - 5
24250-E1200	141- - 5
24250-89943	133- - 2
	133-A- 2
24250-89949	132-A- 2
24250-89952	132- - 2
24250-89983	133- - 2
24256-36700	214- - 2
	244- - 2
24257-10600	141- - 5
	141- - 5
	141- - 5
	152- - 2
24335-E0100	33-A- 1
	73-A- 2
	92-A- 1
	141- - 5
	145- - 7
	145-B- 4
	146- - 7
24410-03021	148- - 1
24410-03023	148- - 1
24410-03025	148- - 1
24410-38300	148- - 1
24410-38301	148- - 1
24410-38304	148- - 1
24420-E0901	213- - 1
24420-E1101	213- - 1
	213- - 1
	243- - 1
24420-E3201	213- - 1
	243- - 1
24420-14800	148- - 1
	213- - 2
	243- - 2
24421-E0100	213- - 1
24423-35001	213- - 2
	243- - 2
24425-73000	148- - 1
24425-73000	213- - 2
	243- - 2
24428-E0101	148- - 1
	213- - 2
	243- - 2
24428-20500	213- - 2
	243- - 2
24428-89900	213- - 2
	243- - 2
24429-73501	213- - 2
	243- - 2
24810-E0105	143- - 1
	143-A- 1
24810-E0106	143- - 1
	143-A- 1
24810-E0205	143- - 1
24810-E0206	143- - 1
24810-E0705	143- - 1
	143-A- 1
24810-E0706	143- - 1
	143-A- 1
24810-E1205	143- - 1
24810-E1207	143- - 1
24810-E1805	143- - 1
	143-A- 1
24810-E1806	143- - 1
	143-A- 1
24810-E1807	143- - 1
	143-A- 1
24810-E1905	143- - 1
	143-A- 1
24810-E1906	143- - 1
	143-A- 1
24810-E1907	143- - 1
	143-A- 1
24810-E1908	143- - 1
	143-A- 1
24812-E0105	143- - 2
24812-E0205	143- - 2
24812-E1205	143- - 2
24812-E1805	143- - 2
24845-E0100	143- - 2
	143-A- 1
24850-E0100	143- - 2
24850-E0101	143- - 2
24850-E0300	143- - 2
24850-E0301	143- - 2
24850-E1202	143- - 2
24850-E1302	143- - 2
24850-E1900	143- - 2

© 1972 NISSAN MOTOR CO., LTD.

REVISED: DECEMBER, 1972

PRINTED IN JAPAN

B-C

PART NUMBER INDEX

(CLASSIFIED BY PART NO.)

PART NO.	PAGE
24854-21600	143- - 2
	143-A- 2
24860-E0100	143- - 2
	143-A- 2
24880-E0100	143- - 2
	143-A- 1
25050-E3200	143-A- 1
25050-77900	143- - 2
	143-A- 1
25050-78100	143- - 2
25060-E0101	132- - 1
25060-E0102	132- - 1
25060-E0301	132- - 1
25060-E0302	132- - 1
25060-E0401	132-A- 1
25060-E0501	132-A- 1
25080-62200	25- - 3
	65- - 2
	84- - 2
	105- - 3
25080-89900	44- - 4
	143-A- 1
25150-E0100	142- - 1
	142- - 1
25150-E0900	142- - 1
25160-E0100	142- - 1
25165-E0100	142- - 1
25230-65001	145- - 5
	145-B- 5
	146- - 4
25230-89903	142- - 4
	142- - 4
25230-89907	142- - 4
25230-89921	142- - 3
25240-89901	142- - 2
25240-89902	122-A- 3
	142- - 2
25240-89910	122-A- 3
	122-B- 4
25251-30100	25- - 3
	65- - 2
	143- - 3
	143-A- 2
25251-37700	44- - 4
	84- - 2
	105- - 3
	143- - 3
	143-A- 2
25260-E0100	142- - 1
25265-E0100	142- - 1
25270-E0100	142- - 1
25280-E0100	142- - 1
	142- - 1
25285-E0100	142- - 1
	142- - 1
25290-E0100	142- - 1
25320-89900	142- - 2
25320-89901	142- - 2
25320-89910	142- - 2
25330-E0100	142- - 1
25330-E0102	142- - 4
	235- - 5
25335-E0100	142- - 1
25360-89900	142- - 2
	142- - 2
	142- - 2
	142- - 3
	142- - 3
25360-89910	142- - 3
25390-20300	134- - 3
25410-E0111	142- - 3
25411-E4910	142- - 3
25415-89900	142- - 3
25415-89901	142- - 3
	142- - 3
25461-89901	142- - 3
25462-89901	142- - 3
25519-89998	142- - 4
25519-89999	142- - 4
25520-13200	142- - 4
25520-89900	142- - 4
25550-E0100	142- - 1
25550-E0102	142- - 2
25550-E0110	142- - 2
	142- - 2
25550-E0112	142- - 2
25550-E1200	142- - 2
25550-E1202	142- - 2
25550-E1210	142- - 2
25550-E1212	142- - 2
25552-E3200	142- - 2
25720-73000	142- - 1
25729-73000	142- - 3
25730-E0400	142- - 4
	272- - 3
25740-E0400	142- - 1
25745-E0400	142- - 1
25800-89901	142- - 4
26006-E0100	151- - 1
26006-E0111	151-A- 1
26010-E0100	151- - 1
26010-E0111	151-A- 1
26010-E1200	151- - 1
26010-E1211	151-A- 1
26010-E3300	151- - 1
26010-E3310	151-A- 1
26011-58001	151- - 1
26011-58002	151-A- 1
26012-13900	151-A- 1
26012-14000	151-A- 1
26012-58001	151- - 1
26012-58501	151- - 1
26022-01301	151-A- 2
26022-58000	151- - 1
	151-A- 2
26023-21001	151- - 1
	151-A- 1
26023-21011	151-A- 1
26024-21001	151- - 1
	151-A- 1
26024-21011	151-A- 1
26056-E0100	151- - 1
26056-E0111	151-A- 1
	151-A- 1
26060-E0100	151- - 1
26060-E0111	151-A- 1
26060-E1200	151- - 1
26060-E1211	151-A- 1
26060-E3300	151- - 1
26060-E3310	151-A- 1
26120-E0101	152- - 1
26120-E0102	152- - 1
26120-E1201	152- - 1
26120-E1202	152- - 1
	152- - 1
26121-E0101	152- - 1
26122-E1201	152- - 1
	152- - 2
26123-E0101	152- - 2
26125-E0101	152- - 1
26125-E0102	152- - 1
26125-E1201	152- - 1
26125-E1202	152- - 1
	152- - 1
26126-E0101	152- - 1
26127-E1201	152- - 2
	152- - 2
26128-E0101	152- - 2
26160-E0101	153- - 1
26161-E0101	153- - 1

© 1972 NISSAN MOTOR CO., LTD.

REVISED: DECEMBER, 1972

PRINTED IN JAPAN

PART NUMBER INDEX

PUB. NO. C-0020

(CLASSIFIED BY PART NO.)

PART NO.	PAGE
26163-E0101	153- - 1
26164-E0101	153- - 1
26169-E0101	153- - 1
26232-30000	156- - 1
26310-E0100	142- - 3
26320-89905	142- - 3
26330-E0100	142- - 3
26347-E0100	149- - 1
26347-E1100	149- - 1
26348-E0100	149- - 1
26350-E0100	149- - 1
26350-E1100	149- - 1
26351-E0100	149- - 1
26360-A4600	149- - 1
26360-A4601	149- - 1
26360-21010	149- - 1
26370-A4601	149- - 2
	149- - 2
26370-69010	149- - 2
	149- - 2
26375-A4600	149- - 2
	149- - 2
26375-A4601	149- - 2
	149- - 2
26375-69010	149- - 2
	149- - 2
26380-E0110	149- - 1
26385-E1110	149- - 1
26388-73000	149- - 1
26389-73000	149- - 1
26410-E0100	156- - 1
26410-E0101	156- - 1
26410-E0400	156- - 1
26411-E0101	156- - 1
26415-E0100	156- - 1
	156- - 1
26418-E0100	156- - 1
	156- - 1
26420-E0101	156- - 1
26425-E0101	156- - 1
26510-E0100	155- - 1
26510-E0400	155-A- 1
26511-E0100	155- - 1
26511-E0400	155-A- 1
26512-E0100	155- - 1
26512-E0400	155-A- 1
26513-E0100	155- - 1
26513-E0400	155-A- 1
26516-E0100	155- - 1
26516-E0400	155-A- 1
26517-E0100	155- - 1
26521-E0200	154- - 1
26521-E0400	154-A- 1
26521-E1200	154- - 1
26526-E0200	154- - 1
26526-E0400	154-A- 2
26526-E1200	154- - 1
26531-E0400	154-A- 1
26531-E1400	154-A- 1
26532-E0400	154-A- 2
26534-E0401	154-A- 3
26536-E0400	154-A- 1
26536-E1400	154-A- 1
26537-E0400	154-A- 2
26539-E0401	154-A- 3
26541-E0400	154-A- 2
26546-E0400	154-A- 2
26550-E0200	154- - 1
26550-E0400	154-A- 1
26550-E1200	154- - 1
26550-E1210	154- - 1
26550-E1400	154-A- 1
26550-E1500	154-A- 1
26551-E0200	154- - 1
26551-E1200	154- - 1
26551-E3200	154- - 1
26552-E0200	154- - 1
26552-E0400	154-A- 1
26553-E0200	154- - 1
26553-E0400	154-A- 2
26555-E0200	154- - 1
26555-E0400	154-A- 1
26555-E1200	154- - 1
26555-E1210	154- - 1
26555-E1400	154-A- 1
26555-E1500	154-A- 1
26557-E0200	154- - 1
26557-E0400	154-A- 1
26558-E0200	154- - 1
26558-E0400	154-A- 2
26560-E0401	154-A- 2
26560-E1400	154-A- 2
26561-E0401	154-A- 3
26562-E0401	154-A- 3
26563-E0401	154-A- 3
26565-E0401	154-A- 3
26565-E1400	154-A- 2
26566-E0401	154-A- 3
26567-E0401	154-A- 3
26568-E0401	154-A- 3
26590-73000	156- - 1
26701-89900	151-A- 1
26701-89910	151-A- 1
	151-A- 1
26701-89920	151- - 1
26702-89905	151-A- 1
26702-89910	151-A- 1
	151-A- 1
26702-89915	151-A- 1
26702-89925	151- - 1
26715-89900	156- - 1
	156- - 1
	156- - 2
26715-89901	155- - 1
	155-A- 1
26715-89902	152- - 1
	153- - 1
26716-89901	154- - 2
	154-A- 2
26717-89900	154- - 2
	154- - 2
	154-A- 2
	154-A- 2
26717-89906	152- - 1
26717-89920	152- - 1
	154- - 2
	154- - 2
	154-A- 2
	154-A- 2
	155- - 1
	155-A- 1
26736-89902	156- - 1
26740-89901	156- - 1
26740-89904	156- - 1
26745-89900	156- - 1
26910-E0100	152- - 2
26994-21600	154- - 2
26997-E0101	152- - 2
27010-E0200	144-A- 1
27010-E0600	144- - 1
27010-E0700	144-B- 1
27010-E0900	144-C- 1
27010-E1200	144-A- 1
27010-E1300	144-B- 1
27010-E1800	144- - 1
27010-E1900	144-C- 1
27010-E3000	144- - 1
27010-E3300	144- - 1
27011-E0101	144- - 1
	144-A- 1

B-C

PRINTED IN JAPAN

© 1972 NISSAN MOTOR CO., LTD.

REVISED: DECEMBER, 1972

PART NUMBER INDEX

(CLASSIFIED BY PART NO.)

PART NO.	PAGE
27011-E0101	144-B- 1
	144-C- 1
27012-E0101	144- - 1
	144-A- 1
	144-B- 1
	144-C- 1
27016-E0100	144- - 1
	144-A- 1
	144-B- 1
	144-C- 1
27020-E0105	144- - 3
	144-A- 2
	144-B- 2
	144-C- 1
27020-78105	144-B- 2
27021-E0105	144- - 3
	144-A- 2
	144-B- 2
	144-C- 1
27021-78105	144-B- 2
27022-E0101	144- - 1
	144-A- 1
	144-B- 2
	144-C- 2
27022-E1801	144- - 1
	144-A- 1
	144-A- 2
	144-B- 2
	144-C- 2
27022-78105	144-A- 2
	144-B- 2
27023-E0201	144-A- 1
27025-E0102	144- - 1
27025-E1700	24- - 1
27025-E1802	144- - 2
27025-E3201	144- - 1
27025-E3300	144- - 2
27026-E0102	144- - 2
27026-E1700	24- - 1
27026-E1801	144- - 2
27026-E3001	144- - 2
27026-E3300	144- - 2
27030-89995	105- - 3
27035-73000	144- - 2
	144-A- 2
	144-B- 1
	144-C- 1
27037-73400	144- - 2
27040-89930	144-C- 2
27041-73000	144-A- 2
27041-73000	144-A- 2
27041-89910	144-B- 1
27041-89915	144-C- 2
27042-73000	65- - 2
27043-E0600	144- - 3
27050-E0100	144- - 2
27050-89930	144- - 1
	144-A- 1
	144-B- 1
	144-C- 2
27050-89960	144-A- 1
27050-89970	144-A- 1
	144-B- 2
	144-C- 2
27050-89995	105- - 3
27051-E0100	144- - 2
	144-A- 1
	144-B- 2
	144-C- 2
27051-73000	144- - 3
	144-A- 2
	144-B- 1
	144-C- 1
27051-89910	144-B- 1
27051-89915	144-C- 2
27060-E0600	144- - 2
27060-E1800	144- - 2
27061-A7100	3- - 4
27061-E0100	144- - 1
27061-E3000	144- - 1
27061-73000	65- - 2
27063-E0102	144- - 2
27063-E1801	144- - 2
27063-73000	144-A- 1
	144-B- 1
	144-C- 1
27065-E0601	144- - 2
27065-72800	74- - 1
27068-72600	144-A- 1
	144-B- 2
	144-C- 2
27069-37600	144-C- 1
27069-73600	144-B- 1
27070-66000	144-A- 1
	144-B- 1
	144-C- 1
27070-73000	74- - 1
27075-32600	74- - 1
27076-E1700	24- - 1
27076-E1701	24- - 1
27076-32600	105- - 3
	144-B- 1
	144-C- 1
27089-E4100	145- - 5
	146- - 5
27110-E0100	145- - 1
27110-E0200	145-A- 1
27110-E0700	145-B- 1
27110-E1200	145-A- 1
27110-E1301	145-B- 1
27110-E1800	145- - 1
27120-E0100	146- - 1
27120-E0200	146-A- 1
	146-A- 1
	146-A- 1
27120-E0700	146-B- 1
27120-E1800	146- - 1
27130-78105	144- - 3
	144-A- 2
	144-B- 2
	144-C- 1
27131-E0100	144- - 4
	144-A- 3
	144-B- 2
	144-C- 2
27131-E0101	144- - 4
	144-A- 3
	144-B- 3
	144-C- 2
27131-E1200	144- - 4
	144-A- 3
	144-B- 3
	144-C- 2
27131-E1201	144- - 4
	144-A- 3
	144-B- 3
	144-C- 3
27161-E0100	144- - 1
	144-A- 1
	144-B- 1
	144-C- 1
27162-E0100	144- - 1
	144-A- 1
	144-B- 1
	144-C- 1
27171-E0101	144- - 3
	144-A- 2
	144-B- 2
	144-C- 2
27172-E0101	144- - 3

© 1972 NISSAN MOTOR CO., LTD.

REVISED: DECEMBER, 1972

PRINTED IN JAPAN

PART NUMBER INDEX

(CLASSIFIED BY PART NO.)

PUB. NO. C-0020

PART NO.	PAGE
27172-E0101	144-A- 2
	144-B- 2
	144-C- 2
27175-E0100	144- - 3
	144-A- 2
	144-B- 2
	144-C- 2
27380-E0100	143- - 3
	143-A- 2
27380-E0105	143- - 3
	143-A- 1
	143-A- 2
27400-E0100	150- - 1
	150- - 1
27400-E3200	150- - 1
27416-89900	150- - 1
27416-89905	150- - 1
27440-E0100	150- - 1
	150- - 1
27440-E3200	150- - 1
27450-E0100	150- - 1
27460-89907	150- - 2
27460-89910	150- - 1
27460-89913	150- - 1
27460-89925	150- - 1
27460-89935	150- - 1
27460-89966	150- - 2
27460-89975	150- - 1
27461-89903	150- - 1
	150- - 1
27461-89940	150- - 1
27470-E0100	150- - 1
27600-E0100	145- - 1
27600-E0200	145-A- 1
27600-E0700	145-B- 1
27600-E1200	145-A- 1
27600-E1301	145-B- 1
27600-E1800	145- - 1
27600-E3025	145- - 3
27600-E3226	145- - 3
27600-E3425	145-B- 3
27614-E0700	145-B- 5
27614-E0705	145-B- 5
27614-E0710	145-B- 5
27614-E3000	145- - 6
	146- - 5
27614-E3001	145- - 6
	146- - 5
27614-E3002	145- - 6
	146- - 5
27614-78200	145- - 5
	145-B- 5
	146- - 5
27623-73400	145- - 3
	145-A- 4
	145-B- 7
27630-E0200	145-A- 4
27630-65001	145- - 2
	146- - 2
	146-A- 3
27630-73600	145-B- 7
	146-B- 3
27630-73625	146-B- 3
27640-E0100	145- - 2
	145-A- 4
	145-B- 7
	146- - 2
	146-A- 3
	146-B- 3
27650-E0100	145- - 2
	145-A- 4
	145-B- 7
	146- - 2
	146-A- 3
	146-B- 3
27665-69000	145- - 2
	145-A- 4
	145-B- 7
27678-28510	145-C- 5
27681-73400	145-C- 2
27685-E0101	145- - 3
	146- - 2
27685-E0200	145-A- 4
27685-E0700	145-B- 7
	146-B- 3
27686-68200	145-C- 3
	145-C- 3
27687-E0101	145- - 3
	146- - 2
	146-A- 3
27693-28510	145-C- 3
27700-E0100	146- - 1
27700-E0700	146-B- 1
27700-E1800	146- - 1
27700-E3025	146- - 2
27700-E3226	146- - 2
27706-65000	145- - 2
	145-A- 4
	145-B- 7
	146- - 2
27706-65000	146-A- 3
	146-B- 3
27715-E0100	146- - 2
	146-A- 4
	146-B- 3
27727-E0100	145- - 2
	145-A- 4
	145-B- 7
	146- - 2
	146-A- 3
	146-B- 3
27727-F0200	146- - 2
	146-A- 3
	146-B- 3
27728-F0200	146- - 2
	146-A- 3
	146-B- 3
27736-28510	145-C- 3
	145-C- 3
27741-E0100	146- - 2
	146-A- 3
	146-B- 3
27742-E0100	146- - 2
	146-A- 3
	146-B- 3
27760-E0100	145- - 1
27760-E0125	145- - 1
	146- - 1
27760-E0225	145-A- 2
	146-A- 2
27760-E0725	145-B- 2
	146-B- 2
27760-E3025	145- - 5
	146- - 4
27760-E3425	145-B- 5
27760-69101	70- - 8
27760-69201	89- - 5
27761-78001	145- - 5
	145-B- 5
	146- - 5
27762-78001	145- - 5
	145-B- 5
	146- - 5
27763-E0100	145- - 5
	145-B- 5
	146- - 5
27765-E0600	145- - 5
	145-B- 5
	146- - 5
27766-E0100	145- - 5

© 1972 NISSAN MOTOR CO., LTD.

REVISED: DECEMBER, 1972

PRINTED IN JAPAN

B-C

PART NUMBER INDEX

(CLASSIFIED BY PART NO.)

PART NO.	PAGE
27766-E0100	145-B- 5
	146- - 5
27767-78001	145- - 2
	145- - 6
	145-A- 3
	145-B- 3
	145-B- 6
	145-C- 6
	146- - 1
	146- - 6
	146-A- 3
	146-B- 2
27771-E0100	145- - 5
	145-B- 5
	146- - 5
27775-69000	70- - 8
	89- - 5
27820-E0100	145- - 1
	146- - 1
27820-E0200	145-A- 1
	146-A- 1
27820-E0700	145-B- 1
	146-B- 1
27830-E0100	145- - 2
	145-A- 3
	145-B- 2
27851-E0100	145- - 4
	145-B- 4
27852-E0100	145- - 4
	146- - 4
27852-E0200	145-B- 5
27853-E0100	145- - 5
	145-B- 5
	146- - 4
27861-E0100	146- - 4
27862-E0100	146- - 4
27863-E0100	146- - 4
27910-E0202	147- - 1
27910-E0226	147- - 1
27910-E0227	147- - 1
27910-E0228	147- - 1
27910-E1200	147- - 1
27910-E1225	147- - 1
27910-E3000	147- - 1
27910-E3200	147- - 1
27910-E3300	147- - 1
27910-E3600	147- - 1
27925-E0100	147- - 1
27930-E0101	147- - 1
27930-E0201	147- - 1
27960-E0200	147- - 1
27984-89900	147- - 1
28800-E0100	149- - 1
28800-E1100	149- - 1
28870-E0100	149- - 1
28870-E1100	149- - 1
28880-E0100	149- - 1

30000

PART NO.	PAGE
30100-E0900	161- - 1
30100-E4301	161- - 1
30100-73004	161- - 1
30100-73006	161- - 1
30207-38701	161- - 1
30208-38700	161- - 1
30209-38701	161- - 1
30210-71200	161- - 1
30211-38700	161- - 1
30213-38700	161- - 1
30214-71200	161- - 1
30215-38700	161- - 1
30221-38700	161- - 1
30224-38700	161- - 1
30225-38700	161- - 1
30229-38700	161- - 1
30231-38700	161- - 1
30236-38701	161- - 1
30237-38700	161- - 1
30239-38700	161- - 1
30251-38700	161- - 1
30401-E3200	168- - 1
30401-E3600	165- - 1
	168- - 1
30401-P0100	168- - 1
30401-P1700	165- - 1
	168- - 2
30401-77900	165- - 1
	168- - 2
30401-78001	165- - 1
	168- - 2
30401-78002	165- - 1
	168- - 2
30401-78100	165- - 1
	168- - 1
30401-78201	165- - 1
	168- - 2
30401-78202	165- - 1
	168- - 2
30401-78301	165- - 1
	168- - 2
30411-E3000	3- - 2
	43- - 2
30411-21000	3- - 2
	43- - 2
30411-38701	103- - 2

© 1972 NISSAN MOTOR CO., LTD.

REVISED: DECEMBER, 1972

PRINTED IN JAPAN

PART NUMBER INDEX

PUB. NO. C-0020

(CLASSIFIED BY PART NO.)

PART NO.	PAGE
30411-77500	64- - 2
30411-78000	64- - 2
30411-78100	23- - 1
30411-78202	83- - 2
30412-21000	3- - 1
	43- - 1
30412-85060	23- - 1
	64- - 1
	64- - 2
	83- - 1
	103- - 1
30422-21000	172- - 5
30422-73400	172- - 5
30501-A3800	161- - 2
30501-22102	161- - 2
30501-73000	161- - 2
30502-13200	161- - 2
30502-61000	161- - 2
30514-14600	161- - 2
30531-78002	161- - 2
30531-78052	161- - 2
30531-78055	161- - 2
30533-76001	162- - 1
30534-21000	161- - 2
30537-E3200	161- - 2
30537-78001	161- - 2
30542-21000	161- - 2
30542-78001	161- - 2
	161- - 2
30543-73900	165- - 1
30547-78001	162- - 1
30610-E3201	163-B- 1
	163-C- 1
30610-E3700	163-D- 1
30610-73000	163-B- 1
	163-C- 1
30610-73400	163- - 1
	163-A- 1
30610-75001	163-D- 1
	163-D- 1
30615-75000	163-D- 2
30616-E1300	163-D- 2
30617-75002	163-D- 2
30620-A0110	162- - 1
30620-E3400	162- - 1
30620-28800	162- - 1
30620-78000	162- - 1
30624-36901	162- - 1
30625-36900	162- - 1
30627-78000	162- - 1
30628-73000	162- - 1
30631-73400	163- - 1
	163-B- 1
30631-73410	163-A- 1
	163-C- 1
30631-75000	163-D- 1
30650-E0100	162- - 2
30650-E0101	162- - 2
30650-73002	162- - 2
30676-B0700	191- - 3
	191-A- 2
31000-E0125	172- - 6
31000-E0250	171- - 1
	172- - 1
31000-E1250	171- - 1
	172- - 1
31000-E1750	171- - 1
	172- - 1
31000-E1850	171- - 1
	172- - 1
31000-E3055	171-A- 1
	172- - 1
31000-E3150	171-A- 1
	172- - 1
31000-E3155	171-A- 1
	172- - 1
31000-E3550	171-A- 1
	172- - 1
31000-H0126	172- - 6
31009-77500	172- - 1
31037-E4000	172- - 4
31061-E0100	172- - 4
31061-E0200	172- - 4
31061-E3000	172- - 4
31063-E0300	172- - 4
31063-E0700	172- - 4
31063-E3000	172- - 4
31064-20300	172- - 4
31065-A4000	172- - 5
31065-E0100	172- - 4
31065-E0200	172- - 5
31067-E0100	172- - 4
31072-E4000	172- - 4
31080-E3000	172- - 5
31080-77500	172- - 5
31084-20300	172- - 5
31086-20301	172- - 5
31100-E0100	172- - 1
31100-X0500	172- - 1
31381-A4000	172- - 6
31381-E4000	172- - 6
31381-20301	172- - 6
31390-X0900	172- - 1
31390-X0901	172- - 1
31390-20301	172- - 1
31394-20300	172- - 1
31395-20300	172- - 1
31396-20300	172- - 1
31397-H1000	172- - 1
31397-20301	172- - 1
31881-77550	172- - 3
31882-20300	172- - 3
31883-20301	135- - 4
	135- - 4
	172- - 3
31913-E0100	172- - 2
31913-E1200	172- - 2
31913-E4001	172- - 2
31916-H0101	172- - 2
31916-X0100	172- - 2
31918-H0100	172- - 2
31919-H0100	172- - 2
31919-X0100	172- - 2
31919-X0101	172- - 2
31931-H0101	172- - 3
31931-X0100	172- - 3
31932-X0100	172- - 4
31932-X0101	172- - 4
31932-X0102	172- - 4
31932-X0103	172- - 3
31932-X0104	172- - 3
31932-20300	172- - 3
31932-20301	172- - 4
31932-20302	172- - 4
31932-20303	172- - 3
31932-20304	172- - 3
31933-X0100	172- - 3
31933-20300	172- - 3
31941-H0101	172- - 3
31941-X0101	172- - 3
31941-X0102	172- - 3
32005-21000	165- - 2
	168- - 2
32010-E3051	164-A- 1
32010-E3056	164- - 1
	164-A- 1
32010-E3135	164-A- 1
32010-E3145	164-A- 1
32010-E3150	164-A- 1
32010-E3155	164-A- 1

B-C

PRINTED IN JAPAN

© 1972 NISSAN MOTOR CO., LTD.

REVISED: DECEMBER, 1972

PART NUMBER INDEX

(CLASSIFIED BY PART NO.)

PART NO.	PAGE
32010-E3335	164-A- 1
32010-E3350	164-A- 1
32010-E3356	164-A- 1
32010-E3437	164-A- 2
32010-E3456	164-A- 2
32010-E3535	164-A- 2
32010-E3536	164-A- 1
32010-E3555	164-A- 2
32010-E3556	164-A- 1
32010-E3651	164-A- 1
32010-E3655	164-A- 1
32010-E3735	164-A- 2
32010-E3736	164-A- 2
32010-E3755	164-A- 2
32010-E3757	164-A- 2
32010-E3835	164-A- 2
32010-E3836	164-A- 1
	164-A- 2
32010-E3855	164-A- 2
32010-E3857	164-A- 1
	164-A- 2
32010-69851	164- - 1
32010-69855	164- - 1
32010-69950	164- - 1
32010-69951	164- - 1
32010-69955	164- - 1
32010-78030	164- - 1
32010-78051	164- - 1
32010-78053	164- - 1
32010-78250	164- - 1
32010-78251	164- - 1
32010-78331	164- - 2
32010-78353	164- - 1
32010-78432	164- - 1
32010-78450	164- - 1
32010-78451	164- - 1
32055-47600	165- - 4
32101-P0500	165- - 1
	168- - 1
	168- - 1
32101-P0700	168- - 1
32101-P0701	168- - 1
	168- - 1
32101-P1800	165- - 1
32101-78002	165- - 1
	168- - 1
	168- - 1
32101-78012	168- - 1
32101-78201	165- - 1
32101-78211	168- - 1
32101-78302	165- - 1
32101-78312	168- - 1
	168- - 1
32101-78401	165- - 1
32101-78411	168- - 1
32103-14600	165- - 2
	168- - 2
	183- - 1
32106-20100	165- - 2
	168- - 3
32110-78000	165- - 1
	168- - 2
32114-20100	165- - 2
	168- - 2
32115-20100	165- - 2
	168- - 2
32118-78000	165- - 2
	168- - 2
32130-78200	165- - 2
	168- - 3
32131-78251	165- - 2
	168- - 3
32132-78000	165- - 2
	168- - 3
32134-78000	165- - 2
	168- - 3
32136-E0100	165- - 2
	168- - 3
	172- - 6
32136-07200	165- - 2
	168- - 3
	172- - 6
32136-20100	172- - 6
32138-78000	165- - 2
	168- - 2
32139-20100	165- - 2
	168- - 2
32144-20400	179- - 1
32144-20401	179- - 1
32200-78050	166- - 1
	166- - 2
32200-78055	169- - 1
	169- - 2
32202-09500	85- - 4
32202-30000	5- - 2
	26- - 2
	49- - 2
	66- - 3
	85- - 4
	106- - 3
32203-E0100	169- - 1
32203-14360	166- - 1
	169- - 1
32203-78000	169- - 1
32204-78000	166- - 2
	169- - 3
32204-78001	166- - 2
	169- - 3
32204-78002	166- - 2
	169- - 3
32204-78003	166- - 2
	169- - 3
32204-78004	166- - 2
	169- - 3
32205-78000	166- - 2
	169- - 3
32207-20100	166- - 2
	169- - 3
32207-20101	166- - 2
	169- - 3
32207-20102	166- - 2
	169- - 3
32210-78010	169- - 1
32210-78200	166- - 1
32212-78010	169- - 1
32212-78200	166- - 1
32216-78000	166- - 1
32216-78010	169- - 1
32217-78000	166- - 1
32218-20100	166- - 1
	169- - 2
32218-20101	166- - 2
	169- - 2
32218-20102	166- - 2
	169- - 2
32218-20103	166- - 2
	169- - 2
32218-20104	166- - 2
	169- - 2
32218-20105	166- - 2
	169- - 2
32218-20106	166- - 2
	169- - 2
32220-78010	169- - 2
32224-20100	166- - 1
	169- - 2
32228-20100	169- - 2
32228-20101	166- - 5
	169- - 2
	169- - 5

© 1972 NISSAN MOTOR CO., LTD.

REVISED: DECEMBER, 1972

PRINTED IN JAPAN

PART NUMBER INDEX

PUB. NO. C-0020

(CLASSIFIED BY PART NO.)

PART NO.	PAGE
32228-20102	169- - 2
32228-20103	169- - 2
32228-20104	169- - 2
32241-78011	169- - 3
32241-78200	166- - 3
32242-78000	166- - 2
32242-78010	169- - 3
32245-78010	169- - 3
32246-78000	166- - 4
	169- - 4
32247-20100	166- - 4
	169- - 4
32250-78000	166- - 3
32250-78010	169- - 3
32253-14600	166- - 3
	169- - 3
32258-78011	169- - 4
32260-78000	166- - 3
32260-78010	169- - 3
32263-14601	166- - 4
	169- - 4
32263-14602	166- - 4
	169- - 4
32263-14603	166- - 4
	169- - 4
32264-14600	166- - 3
	166- - 3
	166- - 3
	169- - 3
	169- - 3
	169- - 3
32272-36900	166- - 1
	166- - 2
	169- - 1
	169- - 2
32273-04100	165- - 2
	166- - 2
	168- - 2
	169- - 2
32273-14360	166- - 1
	169- - 1
32281-78000	166- - 1
32281-78010	169- - 1
32282-78000	166- - 1
32282-78010	169- - 1
32284-78000	166- - 1
	169- - 1
32285-20100	166- - 1
	169- - 1
32290-78000	166- - 1

PART NO.	PAGE
32290-78000	169- - 1
32292-36900	167- - 1
	170- - 1
32294-78010	169- - 1
32311-78000	166- - 4
32311-78001	166- - 4
32311-78002	166- - 4
32311-78003	166- - 4
32311-78004	166- - 4
32311-78005	166- - 4
32352-78002	169- - 4
32353-78001	169- - 4
32354-25500	169- - 4
32354-25501	169- - 4
32357-78200	166- - 4
32382-78001	170- - 1
32382-78002	170- - 1
32601-A8610	166- - 3
	169- - 3
32601-73200	166- - 3
	169- - 3
32603-73200	166- - 3
	166- - 4
	169- - 4
	169- - 4
32604-A4610	166- - 3
	166- - 3
	169- - 4
	169- - 4
32604-P0100	166- - 3
	166- - 3
	169- - 4
	169- - 4
32604-14810	166- - 3
	166- - 3
	169- - 3
	169- - 4
32605-78001	166- - 3
	169- - 4
32606-73200	166- - 3
	166- - 3
	169- - 3
	169- - 4
32609-73200	166- - 3
	166- - 3
	169- - 4
	169- - 4
32609-73201	166- - 3
	166- - 4
	169- - 4

PART NO.	PAGE
32609-73201	169- - 4
32701-20100	166- - 5
	169- - 5
32701-66005	166- - 5
	169- - 5
32703-78101	166- - 4
	169- - 5
	172- - 2
32703-78102	166- - 4
	169- - 5
	172- - 2
32703-78103	166- - 4
	169- - 5
32703-78104	172- - 2
32703-86401	169- - 5
32707-66300	172- - 2
32707-78000	166- - 4
	169- - 5
	172- - 2
32709-14600	166- - 4
	169- - 5
	172- - 2
32710-14600	166- - 4
	169- - 5
	172- - 3
32712-61000	166- - 4
	169- - 5
	172- - 3
32718-14600	166- - 5
	169- - 5
	172- - 3
32720-36900	166- - 5
	167- - 1
	169- - 5
	170- - 1
32801-78000	167- - 1
32801-78010	170- - 1
32803-78001	167- - 1
	167- - 1
	170- - 1
32805-78001	165- - 1
32809-78000	167- - 1
	170- - 1
32811-78000	167- - 1
	170- - 1
32813-78001	167- - 1
	170- - 1
32813-78002	167- - 1
	170- - 1
32816-78010	170- - 1

© 1972 NISSAN MOTOR CO., LTD.

REVISED: DECEMBER, 1972

PRINTED IN JAPAN

B-C

PART NUMBER INDEX

(CLASSIFIED BY PART NO.)

PART NO.	PAGE
32819-78010	170- - 1
32829-26760	167- - 1
	170- - 1
32830-20100	167- - 1
	170- - 1
32833-78001	167- - 1
	170- - 1
32834-78000	167- - 1
	170- - 1
32835-78000	167- - 1
	170- - 1
32857-14600	165- - 3
	168- - 3
32858-14600	165- - 3
	168- - 3
32868-78000	165- - 3
	168- - 3
32880-78000	165- - 3
	168- - 3
32883-78200	165- - 3
32884-78000	165- - 3
	168- - 3
32885-78000	168- - 3
32886-78000	168- - 3
32887-78000	165- - 3
	168- - 3
32888-78002	165- - 3
	168- - 3
32891-E3201	165- - 3
32894-E3201	165- - 3
32911-78000	165- - 3
	168- - 3
32922-78000	167- - 1
	170- - 1
32922-78300	167- - 1
	170- - 1
32923-78000	167- - 1
	170- - 2
32923-78300	167- - 1
	170- - 2
32952-78000	167- - 2
	170- - 2
34102-E0121	178- - 1
	202- - 3
34102-E0200	177- - 1
	202- - 3
	202- - 3
34102-E0206	177- - 1
34102-E0211	178- - 1
34102-E0300	202- - 3
34102-E0300	202- - 3
34102-E0306	176- - 1
34102-E1200	177-A- 1
	202- - 3
	202- - 3
34102-E1206	177-A- 1
34102-E1211	178-A- 1
34102-E1221	178-A- 1
	202- - 4
34102-E1300	176-A- 1
	202- - 3
	202- - 3
34102-E1306	176-A- 1
34102-E1316	176-A- 1
34103-E0200	177- - 1
34103-E0205	177- - 1
34103-E0210	178- - 1
34103-E0300	176- - 1
	176-A- 1
34103-E0305	176- - 1
	176-A- 1
34103-E1200	177-A- 1
34103-E1205	177-A- 1
34103-E1210	178-A- 1
34103-E1220	178-A- 1
34104-73000	176- - 1
	176-A- 1
	177- - 1
	177-A- 1
	178- - 1
	178-A- 1
34105-73000	176- - 1
	176-A- 1
	177- - 1
	177-A- 1
	178- - 1
	178-A- 1
34110-E0201	177- - 1
	177-A- 1
34110-E0202	177- - 1
	177-A- 1
34110-E0301	176- - 1
	176-A- 1
	178- - 1
	178-A- 1
34110-E0302	176- - 1
	176-A- 1
	178- - 1
	178-A- 1
34113-E0110	178- - 1
34113-E0110	178-A- 1
34113-73200	176- - 1
	176-A- 1
	177- - 1
	177-A- 1
34115-73200	176- - 1
	176-A- 1
	177- - 1
	177-A- 1
	178- - 1
	178-A- 1
34116-09400	176- - 1
	176-A- 1
	177- - 1
	177-A- 1
34116-62800	178- - 1
	178-A- 1
34119-E2300	176- - 1
	176-A- 1
	177- - 1
	177-A- 1
	178- - 1
	178-A- 1
34119-E3200	176- - 1
	176-A- 1
	177- - 1
	177-A- 1
	178- - 1
	178-A- 1
34124-73200	176- - 1
	176-A- 1
	177- - 1
	177-A- 1
	178- - 1
	178-A- 1
34125-36700	176- - 1
	176-A- 1
	177- - 1
	177-A- 1
	178- - 1
	178-A- 1
34128-30100	176- - 1
	176-A- 1
	177- - 1
	177-A- 1
	178- - 1
	178-A- 1
34129-73001	176- - 1
	176- - 2
	176-A- 1

© 1972 NISSAN MOTOR CO., LTD.

REVISED: DECEMBER, 1972

PRINTED IN JAPAN

PART NUMBER INDEX

PUB. NO. C-0020

(CLASSIFIED BY PART NO.)

PART NO.	PAGE
34129-73001	176-A- 2
	177- - 1
	177- - 2
	177-A- 1
	177-A- 2
	178- - 1
	178-A- 1
34134-04100	176- - 1
	176-A- 1
	177- - 1
	177-A- 1
	178- - 1
	178-A- 1
34135-73000	176- - 1
	176-A- 1
	177- - 1
	177-A- 1
	178- - 1
	178-A- 1
34142-21200	204- - 2
34190-73700	178- - 1
	178-A- 1
34400-E0200	177- - 2
	202- - 4
34400-E0301	176- - 2
	202- - 4
34400-E1200	177-A- 2
	202- - 4
34400-E1301	176-A- 2
	202- - 4
34400-73700	176-A- 2
	178- - 2
	178-A- 2
34400-77900	177-A- 2
34400-78100	177- - 2
34400-78201	176- - 2
34400-78401	176-A- 2
34405-73000	178- - 2
	178-A- 2
34406-E0120	178- - 2
34406-E0210	178- - 2
34406-E1210	178-A- 2
	178-A- 2
34406-E1220	178-A- 2
34407-73200	176- - 1
	176- - 2
	176- - 3
	176- - 4
	176-A- 2
	176-A- 2
34407-73200	176-A- 3
	176-A- 4
	177- - 2
	177- - 2
	177- - 3
	177- - 5
	177-A- 2
	177-A- 2
	177-A- 3
	177-A- 4
34409-73200	176- - 3
	176-A- 3
	177- - 3
	177-A- 3
34410-04100	176- - 1
	176- - 2
	176-A- 2
	176-A- 2
	177- - 2
	177- - 2
	177-A- 2
	177-A- 2
34414-04100	176- - 2
	176- - 2
	176- - 3
	176- - 4
	176-A- 2
	176-A- 2
	176-A- 3
	176-A- 4
	177- - 2
	177- - 3
	177- - 3
	177- - 5
	177-A- 2
	177-A- 2
	177-A- 3
	177-A- 4
34415-E0201	176- - 3
	177- - 4
34415-E3200	176- - 3
	177- - 4
34415-E3205	176- - 3
	177- - 4
34415-77900	177-A- 3
34415-78100	176- - 3
	177- - 3
34419-04100	176- - 2
	176- - 5
	176-A- 2
34419-04100	176-A- 3
	176-A- 3
	176-A- 4
	177- - 2
	177- - 3
	177- - 3
	177- - 5
	177-A- 2
	177-A- 2
	177-A- 3
	177-A- 4
	177-A- 5
34423-78100	176- - 4
	176-A- 4
	177- - 4
	177-A- 4
34424-78100	176- - 4
	176-A- 4
	177- - 4
	177-A- 4
34431-E0200	176- - 2
	177- - 2
	202- - 4
34431-E1200	176-A- 2
	177-A- 2
34431-E3200	176- - 2
	177- - 2
34431-E3201	176- - 2
	177- - 2
34431-E3205	176- - 2
	177- - 2
34431-78100	176- - 2
	177- - 2
34434-30000	176- - 2
	176-A- 2
	177- - 2
	177-A- 2
	178- - 2
	178-A- 2
34436-77900	177-A- 5
34436-78100	177- - 5
34436-78200	176- - 5
34436-78400	176-A- 4
34438-E1206	177-A- 4
34438-E1316	177-A- 4
34438-77900	177-A- 4
34438-78100	177- - 5
34438-78200	176- - 4
	176-A- 4
34440-E0120	178- - 2
34440-E0210	178- - 2

© 1972 NISSAN MOTOR CO., LTD.

REVISED: DECEMBER, 1972

PRINTED IN JAPAN

B-C

PART NUMBER INDEX

(CLASSIFIED BY PART NO.)

PART NO.	PAGE
34440-E0400	177- - 1
	202- - 4
34440-E0405	177- - 1
34440-E1210	178-A- 2
34440-E1220	178-A- 2
34440-E1400	177-A- 1
	202- - 4
34440-E1405	177-A- 1
34441-E0200	176- - 1
	202- - 4
	202- - 4
34441-E1200	176-A- 2
	177-A- 2
	202- - 4
	202- - 4
34441-E1205	176-A- 1
34444-73200	177- - 2
34445-E0201	176- - 3
	177- - 3
34445-E0205	176- - 3
	177- - 3
34445-E1201	176-A- 3
34445-E1202	177-A- 3
34445-E1205	176-A- 3
	177-A- 3
34445-E3200	176- - 3
	177- - 3
34445-E3205	176- - 3
34450-E0120	178- - 2
34450-E0210	178- - 2
34450-E1210	178-A- 2
34451-E0110	178- - 3
34451-E1210	178-A- 3
34458-61000	176- - 4
	176-A- 4
	177- - 4
	177-A- 4
	178- - 3
	178-A- 3
34459-61000	176- - 4
	176-A- 4
	177- - 4
	177-A- 4
34461-61000	178-A- 3
34462-61000	176- - 4
	177- - 4
	177-A- 4
	178- - 3
	178-A- 3
34463-61000	176- - 4
34463-61000	177- - 4
	177-A- 4
	178- - 3
	178-A- 3
34465-61000	176- - 4
	176-A- 4
	177- - 4
	177-A- 4
	178- - 3
	178-A- 3
34467-10600	178- - 3
	178-A- 3
34467-84700	178- - 3
	178-A- 3
34473-30000	176- - 2
	176-A- 2
	177- - 2
	177-A- 2
	178- - 2
	178-A- 2
34475-36700	195- - 2
34476-36700	195- - 2
34481-73700	178- - 2
	178- - 3
	178- - 3
	178-A- 2
	178-A- 3
34482-73700	178- - 2
	178-A- 2
34483-73700	178- - 2
	178- - 2
	178- - 3
	178- - 3
	178-A- 2
	178-A- 3
34484-73700	178- - 3
	178- - 3
	178-A- 3
34500-E1205	177-A- 3
34500-E1206	177-A- 3
34500-E1315	177-A- 3
34501-E0110	178- - 3
34501-E1206	177-A- 3
34501-E1210	178-A- 3
34503-77900	176-A- 4
	177-A- 4
34503-78100	177- - 4
34503-78200	176- - 4
34505-E0201	176- - 4
	177- - 4
34505-E0205	177- - 4
34505-E0701	176- - 4
34505-E1205	177-A- 4
34505-E1315	176-A- 3
34507-E1210	178-A- 3
34508-77600	178-A- 3
34510-77900	176-A- 4
34513-73000	176-A- 4
	177- - 4
	177-A- 4
34520-E1206	177-A- 4
34520-E3200	176- - 4
	177- - 4
	178-A- 3
34520-77500	178- - 3
34520-77900	176-A- 4
	177-A- 4
34520-78100	176- - 4
	177- - 4
34530-73001	176- - 4
	176-A- 3
	177- - 4
	177-A- 4
34536-73000	176- - 4
	177- - 4
	177-A- 4
34537-73000	176- - 4
	176-A- 3
	177- - 4
34552-89900	176- - 2
	176- - 2
	176- - 3
	176- - 4
	176-A- 2
	176-A- 2
	176-A- 3
	176-A- 4
	177- - 2
	177- - 2
	177- - 3
	177- - 5
	177-A- 2
	177-A- 2
	177-A- 3
	177-A- 4
36010-E0106	191- - 1
36010-E1206	191-A- 1
36010-E1208	191-A- 1
36010-E3200	191- - 1
36011-89901	191- - 2

© 1972 NISSAN MOTOR CO., LTD.

REVISED: DECEMBER, 1972

PRINTED IN JAPAN

PART NUMBER INDEX

PUB. NO. C-0020

(CLASSIFIED BY PART NO.)

PART NO.	PAGE
36011-89901	191-A- 1
36320-21000	191- - 1
	191-A- 1
36326-E0100	191- - 1
36326-E1200	191-A- 1
36326-F0200	191- - 1
36328-E0106	191- - 1
	191-A- 1
36328-E3200	191- - 1
36330-36700	191- - 1
	191-A- 1
36330-76000	191- - 1
	191-A- 1
36335-21000	191- - 1
	191-A- 1
36335-76000	191- - 1
	191-A- 1
36337-10600	191- - 1
36337-10800	191-A- 1
36338-36700	191- - 1
	191-A- 1
36339-21000	191- - 1
36339-21400	191-A- 1
36363-E3200	191- - 1
36364-E3200	191- - 2
36365-E3200	191- - 2
36366-E3200	191- - 2
36372-E0106	191- - 1
	191-A- 1
36372-E3200	191- - 1
36373-36700	191- - 2
	191-A- 1
36374-E3200	191- - 2
36376-73000	191- - 2
	191-A- 2
36377-10600	191- - 1
	191-A- 1
36377-28500	191- - 2
36378-10600	191- - 1
	191-A- 1
36379-73000	191- - 2
	191-A- 1
36385-73000	191- - 2
	191-A- 2
36386-73000	191- - 2
	191-A- 2
36387-73000	191- - 3
	191-A- 2
36402-E0106	191- - 2
36402-E1206	191-A- 1
36402-E1208	191-A- 2
36402-E3200	191- - 2
36404-73001	191- - 3
	191-A- 2
36404-73002	191- - 3
	191-A- 2
36406-32200	191- - 3
	191-A- 2
36407-73000	191- - 3
	191-A- 2
36408-N1200	191- - 5
	191-A- 4
36408-36700	191- - 3
	191-A- 2
36409-73000	191- - 3
	191-A- 2
36428-35000	191- - 4
	191-A- 4
36437-36700	191- - 3
	191-A- 2
36451-73000	191- - 4
	191-A- 3
36510-E0100	191- - 3
	191-A- 2
36510-E3200	191- - 3
	191-A- 3
36511-73000	191- - 3
	191-A- 3
36513-E3200	191- - 4
	191-A- 3
36513-73000	191- - 3
	191-A- 3
36517-73000	191- - 4
	191-A- 3
36518-F0200	191- - 4
	191-A- 3
36525-73002	191- - 4
	191-A- 3
36527-22500	191- - 4
	191-A- 3
36528-22500	191- - 4
	191-A- 3
36530-73000	191- - 4
	191-A- 3
36531-73000	191- - 4
	191-A- 3
36536-E0100	191- - 5
	191-A- 4
36537-E0100	191- - 5
	191-A- 4
36544-U1400	191- - 4
	191-A- 3
36544-30000	191- - 4
	191-A- 3
36545-73000	191- - 4
	191-A- 4
37000-E3100	179- - 1
37000-E3200	179- - 1
	179- - 1
37000-69800	179- - 1
37000-73000	179- - 1
	179- - 1
37000-73500	179- - 1
37000-73700	179- - 1
37110-69800	179- - 1
37111-14600	179- - 2
37111-69800	179- - 2
37111-73700	179- - 2
	179- - 2
37117-14600	179- - 1
	179- - 2
37117-14601	179- - 1
	179- - 2
37120-B3000	145-A- 2
	146-A- 2
37125-14600	179- - 2
	179- - 3
37125-14625	179- - 2
	179- - 3
37125-14627	179- - 2
	179- - 3
37130-14600	179- - 2
	179- - 3
37138-69800	179- - 2
	181- - 2
	181- - 3
	181-A- 3
	181-A- 3
37146-14600	179- - 2
	179- - 3
37147-14600	179- - 2
	179- - 3
37148-14600	179- - 3
	179- - 3
37149-14600	179- - 3
	179- - 3
37210-69800	179- - 1
37210-73000	179- - 2
	179- - 2
	179- - 2

© 1972 NISSAN MOTOR CO., LTD.

REVISED: DECEMBER, 1972

PRINTED IN JAPAN

B-C

PART NUMBER INDEX

(CLASSIFIED BY PART NO.)

PUB. NO. C-0020

PART NO.	PAGE
37210-73500	179- - 2
37210-73700	179- - 2
37220-69800	179- - 2
37223-69800	179- - 2
37224-69800	179- - 2
37330-69800	179- - 2
37510-E1800	179- - 3
37516-69800	179- - 1
37520-E1800	179- - 3
37521-69800	179- - 1
38100-A5300	180- - 2
	180- - 2
38100-25600	180- - 2
	180- - 2
38100-25900	180- - 2
	180- - 2
38100-26000	180- - 2
	180- - 2
38100-36800	180- - 2
38100-77500	180- - 2
38102-01300	180- - 5
38103-01300	180- - 5
38120-61000	180- - 3
38125-61001	180- - 4
38126-61001	180- - 4
38127-61001	180- - 4
38128-61001	180- - 4
38129-61001	180- - 4
38130-61001	180- - 4
38131-61001	180- - 4
38132-61001	180- - 4
38133-61001	180- - 4
38134-61001	180- - 4
38135-61001	180- - 4
38136-61001	180- - 4
38137-61001	180- - 5
38138-61001	180- - 5
38139-61001	180- - 5
38140-61000	180- - 4
38153-27160	180- - 3
38154-27160	180- - 3
38156-27160	180- - 3
38157-61200	180- - 5
38161-27160	180- - 3
38162-73000	183- - 2
38165-61001	180- - 4
38166-61001	180- - 4
38167-61001	180- - 4
38189-61001	180- - 5
38210-73001	180- - 5
38215-61000	179- - 1
	180- - 5
38216-13200	180- - 5
38300-E1010	180- - 1
	180- - 1
38300-P0100	180- - 1
38300-P0201	180- - 1
38300-P0300	180- - 1
	180- - 1
38300-P0500	180- - 1
	180- - 1
38300-73001	180- - 1
38300-73200	180- - 1
38300-75000	180- - 1
	180- - 1
38300-75400	180- - 1
	180- - 1
38315-01304	180- - 1
38320-B3000	183- - 2
38320-25670	183- - 2
38322-55100	183- - 2
38322-78000	165- - 2
	168- - 3
38421-07200	180- - 2
38423-73000	180- - 2
38424-25660	180- - 2
38424-32200	180- - 2
38424-32201	180- - 3
38424-32202	180- - 3
38424-32203	180- - 3
38425-71200	180- - 2
38426-32200	180- - 3
38427-25660	180- - 3
38428-25660	180- - 3
38440-25660	180- - 3
38453-61200	180- - 3
38455-61200	180- - 3
38456-61200	180- - 3
38457-61200	180- - 3

40000

PART NO.	PAGE
40000-E0150	181- - 1
40000-E0151	181- - 1
40000-E0230	181-A- 2
40000-E0239	181- - 1
40000-E0330	181-A- 2
40000-E0950	181-A- 2
40000-E1050	181- - 1
	181- - 1
40000-E1230	181- - 1
40000-E1450	181-A- 1
40000-E1730	181- - 1
40000-E1750	181-A- 1
40000-E1850	181-A- 1
40000-E1950	181-A- 1
	181-A- 2
40000-E3030	181- - 1
40000-E3035	181-A- 1
40000-E3130	181- - 1
40000-E3131	181- - 1
40000-E3132	181- - 1
40000-E3133	181-A- 1
40000-E3134	181-A- 1
40000-E3135	181-A- 1
40000-E3136	181-A- 1
40000-E3138	181-A- 1
40000-E3139	181-A- 1
40000-E3150	181- - 1
40000-E3530	181-A- 1
40000-E3555	181-A- 1
40000-E3750	181-A- 1
40000-E3755	181-A- 1
	181-A- 2
40014-73050	181-A- 2
40014-73450	181- - 2
40015-73450	181- - 2
40037-04100	181- - 2
	181-A- 2
40038-73000	181- - 3
	181-A- 4
40040-04100	181- - 2
	181-A- 2
40052-73001	181-A- 4
40052-73401	181- - 3
40053-73001	181-A- 4
40053-73401	181- - 3
40110-E0100	181- - 2

B—C

PRINTED IN JAPAN

© 1972 NISSAN MOTOR CO., LTD.

REVISED: DECEMBER, 1972

PART NUMBER INDEX

PUB. NO. C-0020

(CLASSIFIED BY PART NO.)

PART NO.	PAGE
40110-E0100	181-A- 3
40142-E0100	181- - 2
	181-A- 3
40146-73000	181- - 2
	181-A- 3
40160-E0100	181- - 2
	181-A- 3
40161-E0100	181- - 3
	181-A- 3
40189-73000	181- - 2
	181- - 3
	181-A- 3
	181-A- 3
	182- - 1
	182- - 2
	203- - 1
	203- - 1
	203- - 2
40192-73000	181- - 3
	181-A- 3
40196-73001	181- - 3
	181-A- 3
40198-E0100	181- - 3
	181-A- 3
40202-73000	181-A- 4
40202-73450	181- - 4
40206-E3200	181- - 4
40206-73401	181- - 4
40206-78000	181-A- 4
40208-73400	181- - 4
40210-73000	181- - 4
	181-A- 4
40210-85000	180- - 3
40215-P0100	181- - 4
	181-A- 4
40215-10360	181- - 4
	181-A- 4
40222-73000	181-A- 4
	183- - 2
40222-73400	181- - 4
40224-73000	181- - 4
	181-A- 5
	183- - 3
40227-73000	181- - 4
	181-A- 4
40234-04100	181- - 4
40242-73001	192-A- 5
	192-B- 5
40264-E3200	181- - 2
	181-A- 2
40300-E0900	181-A- 5
	183- - 3
40300-E0902	181- - 4
	181-A- 5
	183- - 3
40300-F0200	181- - 4
	181-A- 5
	183- - 3
40300-73001	181- - 4
	181-A- 5
40300-77400	181-A- 5
	183- - 3
40300-78000	183- - 3
40300-78100	181- - 4
	183- - 3
40310-E0901	181- - 5
	181-A- 6
	183- - 4
	183- - 4
40310-E0902	183- - 4
40310-E0908	181-A- 5
40310-E3208	181- - 5
	181-A- 6
	183- - 4
40310-73000	181-A- 5
	183- - 4
40310-73002	181- - 4
	181-A- 5
	183- - 3
40310-73008	181- - 5
	181-A- 5
	183- - 3
40310-73010	181- - 5
	181-A- 5
	183- - 4
40310-73012	181- - 5
	181-A- 5
	183- - 4
40310-73022	181- - 5
	181-A- 5
	183- - 3
40310-73200	181- - 5
	181-A- 5
	183- - 4
40310-73202	181- - 5
	181-A- 5
	183- - 4
40310-73208	181- - 5
	181-A- 5
	183- - 4
40312-E3203	181- - 5
	181-A- 6
	183- - 4
40312-E3213	181- - 5
	181-A- 6
	183- - 4
40312-E3503	181- - 5
	181-A- 6
	183- - 4
40312-77900	181- - 4
	181-A- 5
	183- - 3
40312-77902	181- - 5
	181-A- 5
	183- - 3
40312-77910	183- - 3
40312-77912	181- - 5
	181-A- 5
	183- - 3
40315-E3200	181-A- 4
	183- - 3
40315-E3201	181- - 4
	183- - 3
40315-69000	181- - 4
	181-A- 4
	183- - 3
40315-69200	181-A- 4
	183- - 3
40315-69600	181-A- 4
	183- - 3
41000-E0200	192-A- 1
41000-E0400	192-B- 1
	192-B- 1
41000-E1200	192-A- 1
	192-B- 1
41000-73401	192- - 1
41004-73400	192- - 2
41005-16505	145- - 1
	145- - 1
	146- - 1
	176- - 3
	176-A- 3
	181- - 3
	181-A- 4
	182- - 6
41005-73400	192- - 2
41006-E0100	181- - 3
41006-E0101	181- - 3
41010-E0200	192-A- 1
41010-F0400	192-B- 1

B-C

PRINTED IN JAPAN

© 1972 NISSAN MOTOR CO., LTD.

REVISED: DECEMBER, 1972

PART NUMBER INDEX

(CLASSIFIED BY PART NO.)

PUB. NO. C-0020

PART NO.	PAGE
41010-E0400	192-B- 1
41010-E1200	192-A- 1
	192-B- 1
41010-73401	192- - 1
41016-E0100	181- - 3
41020-73000	192-A- 1
	192-B- 1
41025-73001	192-A- 1
	192-B- 1
41027-73000	192-A- 1
	192-B- 1
41028-73001	192-A- 1
	192-B- 1
41029-73001	192-A- 1
	192-B- 1
41030-73000	192-A- 1
	192-B- 1
41049-14600	192- - 2
41057-14600	192- - 1
	192- - 2
	192- - 2
41060-E3000	192-A- 1
	192-B- 1
41060-E3500	192-A- 1
	192-B- 1
41060-65002	192- - 2
41060-73401	192- - 2
41060-78000	192-A- 1
	192-B- 1
41066-73000	192-A- 1
	192-B- 1
41066-78000	192-A- 1
	192-B- 1
41071-14600	192- - 2
41081-73000	192-A- 5
	192-B- 5
	193-A- 3
	193-B- 2
	193-C- 3
	193-D- 5
41083-73000	192-A- 5
	192-B- 5
41090-P0500	192-A- 2
	192-A- 5
	192-B- 1
	192-B- 5
41090-P0525	192-A- 1
	192-A- 5
	192-B- 1
	192-B- 5
41090-73000	192-A- 1
	192-B- 1
41091-73000	192-A- 2
	192-B- 1
41100-E0200	192-A- 2
	192-A- 3
	192-A- 4
	192-B- 5
41100-E0400	192-B- 2
	192-B- 3
	192-B- 4
41100-10627	192-B- 3
41100-14600	192- - 1
41100-73001	192-A- 2
	192-A- 3
41100-73025	192-A- 3
41100-73026	192-A- 3
41100-73028	192-B- 3
41100-73201	192-B- 2
	192-B- 3
41100-73225	192-B- 3
41100-73226	192-B- 3
41100-73227	192-B- 4
41100-73228	192-B- 4
41101-E0200	192-A- 2
	192-A- 3
	192-A- 4
	192-B- 5
41101-E0400	192-B- 2
	192-B- 4
	192-B- 4
41101-14600	192- - 1
41101-73001	192-A- 2
	192-A- 3
41101-73201	192-B- 2
	192-B- 3
41102-E0200	192-A- 2
	192-A- 3
	192-A- 4
	192-B- 5
41102-E0400	192-B- 2
	192-B- 3
	192-B- 4
41102-73001	192-A- 2
	192-A- 3
41102-73201	192-B- 2
	192-B- 3
41103-E0200	192-A- 2
	192-A- 4
	192-A- 4
41103-E0200	192-B- 5
41103-E0400	192-B- 2
	192-B- 4
	192-B- 4
41103-73001	192-A- 2
	192-A- 4
41103-73201	192-B- 2
	192-B- 4
41110-73000	192-A- 2
	192-A- 3
41110-73201	192-B- 2
	192-B- 2
41112-73201	192-B- 2
	192-B- 2
41116-71400	192-B- 2
	192-B- 2
41116-73000	192-A- 2
	192-A- 2
	192-B- 3
41116-73210	192-B- 4
41120-14600	192- - 1
	192- - 1
41122-73010	192-A- 3
	192-A- 4
41122-73210	192-B- 3
	192-B- 4
41123-10500	192-A- 2
	192-A- 3
	192-B- 2
	192-B- 2
41123-10610	192-A- 3
	192-A- 4
	192-B- 3
	192-B- 4
41124-14600	192- - 1
	192- - 1
41124-30101	193- - 2
	193-D- 4
41126-14600	192- - 1
41127-14600	192- - 1
	192- - 2
41127-73400	192- - 1
	192- - 2
41128-E0310	193- - 2
	193-A- 3
	193-B- 2
	193-C- 3
	193-D- 2
	193-D- 3
	193-D- 4

© 1972 NISSAN MOTOR CO., LTD.

REVISED: DECEMBER, 1972

PRINTED IN JAPAN

PART NUMBER INDEX

PUB. NO. C-0020

(CLASSIFIED BY PART NO.)

PART NO.	PAGE
41128-E0310	193-D- 5
	196- - 2
	196-A- 1
41128-08010	192-A- 4
	192-B- 4
41128-14600	192- - 1
41128-30001	162- - 1
	192-A- 3
	192-A- 4
	192-B- 3
	192-B- 4
	196-A- 3
41128-75000	163- - 2
	163-D- 1
41129-30001	162- - 1
	163- - 2
	163-A- 2
	163-D- 1
	192- - 1
	192-A- 2
	192-A- 3
	192-A- 3
	192-A- 4
	192-B- 2
	192-B- 3
	192-B- 3
	192-B- 4
	193- - 2
	193-A- 3
	193-B- 2
	193-C- 3
	193-D- 2
	193-D- 3
	193-D- 4
	193-D- 5
	196- - 2
	196-A- 1
	196-A- 3
41130-E0100	192- - 3
41130-E0101	192- - 3
41130-08000	192-A- 3
	192-B- 2
41130-08010	192-A- 4
	192-B- 4
41140-E0100	192- - 3
41140-E0101	192- - 3
41140-E0200	192-A- 5
	192-B- 5
41140-E0201	192-A- 5
	192-B- 5

PART NO.	PAGE
41140-E3200	192- - 3
41141-E0100	192- - 3
41141-E0101	192- - 3
41141-E0200	192-A- 5
	192-B- 5
41141-E0201	192-A- 5
	192-B- 5
41141-E3200	192- - 3
41142-14600	192- - 2
41143-14600	192- - 2
41158-04100	192-A- 3
	192-B- 3
41158-04110	192-A- 4
	192-B- 4
41161-10600	192-A- 2
	192-B- 2
41161-10610	192-A- 3
	192-B- 3
41214-14600	192- - 2
41217-14600	192- - 2
41218-14600	192- - 1
	192- - 2
43000-E0130	181- - 1
	181- - 2
	183- - 1
	183- - 1
43000-E0150	181- - 1
	183- - 1
43000-E0239	183- - 1
43000-E0430	181-A- 2
	183- - 1
43000-E1230	181-A- 2
	183- - 1
43000-E1250	181-A- 2
	181-A- 2
	183- - 1
43000-E1430	183- - 1
43000-E1730	181- - 2
	183- - 1
	183- - 1
43000-E1750	181-A- 2
	183- - 1
	183- - 1
	183- - 1
43010-73000	183- - 1
43059-A1600	183- - 2
43067-47600	145- - 3
43067-73000	183- - 2
43068-32200	183- - 2
43070-32200	183- - 2

PART NO.	PAGE
43082-73000	183- - 2
43083-32201	183- - 2
43084-61001	183- - 2
43206-78000	183- - 3
43215-73000	183- - 2
43219-32200	183- - 2
43232-78100	183- - 2
43242-73000	183- - 2
43248-73000	183- - 2
44000-E0102	193-B- 1
	193-C- 1
44000-E0103	193-B- 1
	193-C- 1
44000-E0202	193- - 1
44000-E0203	193- - 1
44000-E0402	193-D- 1
	193-D- 1
44000-E0403	193-D- 1
44000-E1202	193- - 1
	193-A- 1
	193-D- 1
	193-D- 1
44000-E1203	193- - 1
	193-A- 1
	193-D- 1
44010-E0102	193-B- 1
	193-C- 1
44010-E0103	193-B- 1
	193-C- 1
44010-E0202	193- - 1
44010-E0203	193- - 1
44010-E0402	193-D- 1
	193-D- 1
44010-E0403	193-D- 1
44010-E1202	193- - 1
	193-A- 1
	193-D- 1
	193-D- 1
44010-E1203	193- - 1
	193-A- 1
	193-D- 1
44020-E0101	193-B- 1
	193-C- 1
	193-D- 1
44020-E0102	193- - 1
	193- - 1
	193-A- 1
	193-B- 1
	193-C- 1
	193-D- 1

© 1972 NISSAN MOTOR CO., LTD.

REVISED: DECEMBER, 1972

PRINTED IN JAPAN

B-C

PART NUMBER INDEX

PUB. NO. C-0020

(CLASSIFIED BY PART NO.)

PART NO.	PAGE
44020-P0101	193- - 1
	193- - 1
	193-A- 1
	193-B- 1
	193-C- 1
	193-D- 1
44030-E0101	193-B- 1
	193-C- 1
	193-D- 1
44030-E0102	193- - 1
	193- - 1
	193- - 1
	193-A- 1
	193-B- 1
	193-C- 1
	193-D- 1
44030-P0101	193- - 1
	193- - 1
	193-A- 1
	193-B- 1
	193-C- 1
	193-D- 1
44060-E0100	193-B- 1
	193-C- 1
44060-E0200	193- - 1
44060-E0400	193- - 1
	193-A- 1
	193-D- 1
44060-E3200	193-B- 1
	193-C- 1
44066-E0100	193-B- 1
	193-C- 1
44066-73000	193- - 1
	193-A- 1
	193-D- 1
44070-E0100	193-B- 1
	193-C- 1
44070-E0200	193- - 1
44070-E0400	193- - 1
	193-A- 1
	193-D- 1
44070-E3200	193-B- 1
	193-C- 1
44081-73000	193- - 3
44082-32200	192-A- 5
	192-B- 5
	193- - 3
	193-A- 3
	193-B- 2
	193-C- 3
44082-32200	193-D- 5
44083-E0100	193- - 3
	193-A- 3
	193-B- 2
	193-C- 3
	193-D- 5
44084-32201	192-A- 5
	192-B- 5
	193- - 3
	193-A- 3
	193-B- 3
	193-C- 3
	193-D- 5
44090-E0100	193-B- 1
	193-C- 2
44090-E0200	193- - 1
	193-A- 1
	193-D- 1
44091-E0100	193- - 2
	193-A- 1
	193-B- 1
	193-C- 2
	193-D- 2
44091-73000	193- - 2
	193-A- 1
	193-B- 1
	193-C- 2
	193-D- 2
44100-E0101	193-B- 1
	193-C- 2
44100-E0201	193- - 2
	193-A- 1
	193-D- 3
	193-D- 4
44100-E0401	193-D- 2
	193-D- 2
44101-E0101	193-B- 1
	193-C- 2
44101-E0201	193- - 2
	193-A- 2
	193-D- 3
	193-D- 4
44101-E0401	193-D- 2
	193-D- 2
44108-E0110	193-B- 2
	193-C- 2
44108-E0210	193- - 2
	193-A- 2
	193-D- 4
	193-D- 4
44108-E0410	193-D- 2
	193-D- 3
44112-10610	192-A- 3
	192-A- 4
44112-12061	192-A- 2
	192-A- 2
44112-32211	193-B- 2
	193-C- 2
44112-42100	192-B- 3
	192-B- 4
44112-44311	193-D- 2
	193-D- 3
44113-31710	193- - 2
	193-A- 2
	193-B- 2
	193-C- 2
	193-D- 4
	193-D- 4
44113-73210	193-D- 2
	193-D- 3
44118-E0110	193- - 2
	193-A- 2
	193-B- 1
	193-C- 2
	193-D- 3
	193-D- 4
44118-E0410	193- - 2
	193-A- 2
	193-B- 2
	193-C- 2
	193-D- 2
	193-D- 3
	193-D- 3
	193-D- 4
44119-E0110	193- - 2
	193-A- 2
	193-B- 2
	193-C- 2
	193-D- 3
	193-D- 4
44119-E0410	193-D- 2
	193-D- 3
44124-E0210	193- - 2
	193-A- 2
	193-B- 2
	193-C- 2
	193-D- 4
	193-D- 4
44124-E0410	193-D- 2
	193-D- 3

© 1972 NISSAN MOTOR CO., LTD.

REVISED: DECEMBER, 1972

PRINTED IN JAPAN

PART NUMBER INDEX

PUB. NO. C-0020

(CLASSIFIED BY PART NO.)

PART NO.	PAGE
44124-30101	193-A- 2
	193-D- 3
	193-D- 4
44125-68200	193- - 2
	193-A- 2
	193-B- 2
	193-C- 2
	193-D- 2
	193-D- 3
	193-D- 3
	193-D- 4
44141-E0210	193- - 2
	193-A- 2
	193-B- 2
	193-C- 2
	193-D- 2
	193-D- 3
	193-D- 4
	193-D- 5
44144-E0210	193- - 2
	193-A- 3
	193-B- 2
	193-C- 3
	193-D- 2
	193-D- 3
	193-D- 4
	193-D- 5
44145-E0210	193- - 2
44149-E0210	193- - 2
	193-A- 2
	193-B- 2
	193-C- 2
	193-D- 2
	193-D- 3
	193-D- 4
	193-D- 5
44152-E0210	193- - 2
	193-A- 2
	193-B- 2
	193-C- 3
	193-D- 2
	193-D- 3
	193-D- 4
	193-D- 5
44153-E0210	193- - 2
	193-A- 2
	193-B- 2
	193-C- 3
	193-D- 2
	193-D- 3
44153-E0210	193-D- 4
	193-D- 5
44154-E0210	193-A- 2
	193-B- 2
	193-C- 3
	193-D- 2
	193-D- 3
	193-D- 4
	193-D- 5
44155-E0210	193- - 2
	193-A- 2
	193-B- 2
	193-C- 3
	193-D- 2
	193-D- 3
	193-D- 4
	193-D- 5
44200-E0100	193- - 2
	193-A- 3
	193-B- 2
	193-C- 3
	193-D- 5
46010-E0100	196-D- 1
	196-E- 1
46010-E0101	196-D- 1
	196-E- 1
46010-E0127	196-B- 2
	196-C- 3
46010-E0129	196-B- 2
46010-E0200	196-B- 1
	196-C- 1
46010-E0201	196-B- 1
	196-C- 1
46010-E0202	196-B- 1
46010-E0228	196-B- 2
	196-C- 3
46010-E0229	196-B- 2
	196-C- 3
46010-E0300	196- - 1
46010-E0400	196-A- 1
	196-A- 2
46010-E3706	196- - 1
46010-10827	196- - 3
46010-10828	196- - 3
46010-73027	196-B- 2
	196-C- 2
46015-E0300	196- - 2
46016-10610	163-A- 1
	163-C- 2
	196- - 2
46016-10610	196-A- 1
	196-B- 2
	196-C- 2
	196-D- 2
	196-E- 2
46016-12200	163- - 2
	163-B- 2
	196-A- 2
46016-14600	163- - 2
	163-B- 2
	196-A- 3
46020-E0300	163- - 2
	163-B- 2
	196-A- 3
46020-R0100	163- - 2
	163-B- 2
	196-A- 3
46020-10611	163-A- 2
	163-C- 2
	196- - 2
	196-A- 1
	196-B- 2
	196-C- 2
	196-D- 2
	196-E- 2
46020-28600	163- - 2
	163-B- 2
	196-A- 3
46020-76001	163-D- 1
46021-30100	163-D- 1
46027-A6900	196-B- 1
	196-C- 2
	196-D- 1
	196-F- 1
46027-10600	196-A- 2
46027-10610	196- - 1
	196-A- 1
46027-73010	196-B- 1
	196-C- 2
	196-D- 1
	196-E- 1
46032-10610	163-A- 1
	163-C- 1
46032-27260	163- - 1
	163-B- 1
	163-D- 1
46036-30100	196-B- 2
	196-C- 2
	196-D- 2
	196-E- 2

© 1972 NISSAN MOTOR CO., LTD.

REVISED: DECEMBER, 1972

PRINTED IN JAPAN

PART NUMBER INDEX

(CLASSIFIED BY PART NO.)

PART NO.	PAGE
46038-E0110	196-B- 2
	196-C- 2
	196-D- 2
46038-10610	196- - 1
	196-A- 1
46038-12200	196-A- 2
46038-69010	196-D- 2
	196-E- 2
46041-10610	163-A- 2
46042-27260	196- - 1
	196-A- 1
	196-A- 2
46043-27260	163- - 1
	163-B- 1
	163-D- 1
	196-A- 2
46050-10600	196-A- 2
46050-10610	196- - 1
	196-A- 1
46050-73010	196-B- 1
	196-C- 2
	196-D- 1
	196-E- 1
46050-73410	196-D- 2
	196-E- 2
46056-27260	163- - 1
	163-A- 1
	163-B- 1
	163-C- 1
	163-D- 1
	196- - 1
	196-A- 1
	196-A- 2
46056-73010	196-B- 1
	196-B- 1
	196-C- 1
	196-C- 1
	196-D- 1
	196-D- 1
	196-E- 1
	196-E- 1
46057-10600	196-A- 2
46057-10610	196- - 1
	196-A- 1
	196-B- 2
	196-C- 2
	196-D- 1
	196-E- 1
46057-73410	196-D- 2
	196-E- 2
46059-30800	196-A- 2
46059-69010	196-B- 1
	196-C- 2
	196-D- 1
	196-E- 1
46061-10600	196-A- 2
46061-10610	196- - 1
	196-A- 1
46061-30000	163- - 1
	163-A- 1
	163-B- 1
	163-C- 1
	163-D- 1
46062-10610	196- - 1
	196-A- 1
46062-73010	196-B- 1
	196-C- 1
	196-D- 1
	196-E- 1
46063-E0110	196-D- 1
	196-E- 1
46063-E0111	196-E- 1
46063-E0210	196-B- 1
	196-C- 1
46063-E0211	196-B- 1
	196-C- 1
	196-D- 1
	196-E- 1
46063-E0212	196-C- 1
	196-D- 1
46063-10611	196- - 1
46063-73500	196-A- 2
46063-73510	196-A- 1
46064-10600	196-A- 2
46064-10610	163-A- 1
	163-C- 1
46064-30002	163- - 1
	163-B- 1
	163-D- 1
46065-10610	163-A- 1
	163-C- 1
46065-15800	163- - 1
	163-B- 1
	163-D- 1
46068-10611	196- - 1
	196-A- 1
	196-B- 1
	196-C- 1
	196-D- 1
	196-E- 1
46068-73500	196-A- 2
46070-10600	196-A- 2
46070-10610	196- - 1
	196-A- 1
46070-27260	163- - 1
	163-A- 1
	163-B- 1
	163-C- 1
	163-D- 1
46070-69010	196-B- 1
	196-C- 1
	196-D- 1
	196-E- 1
46070-73500	196-A- 2
46071-27260	196- - 2
	196-A- 1
	196-A- 2
	196-B- 1
	196-C- 2
	196-D- 1
	196-E- 1
46072-73010	196-A- 1
	196-B- 1
	196-C- 2
	196-D- 1
	196-E- 1
46073-10610	163-A- 1
	163-C- 1
	196- - 1
	196-A- 1
	196-B- 1
	196-C- 1
	196-D- 1
	196-E- 1
46073-30800	163- - 1
	163-B- 1
	163-D- 1
	196-A- 2
46074-30800	196-A- 2
46075-73010	196-B- 1
	196-C- 1
	196-D- 1
	196-E- 1
46076-08700	163- - 1
	163-B- 1
	163-D- 1
46076-30800	163- - 1
	163-A- 1
	163-B- 1
	163-C- 1

© 1972 NISSAN MOTOR CO., LTD.

REVISED: DECEMBER, 1972

PRINTED IN JAPAN

PART NUMBER INDEX

PUB. NO. C-0020

(CLASSIFIED BY PART NO.)

PART NO.	PAGE
46076-30800	163-D- 1
	196-A- 2
46077-08710	163-A- 1
	163-C- 1
46078-10611	196- - 1
	196-A- 1
	196-B- 1
	196-B- 1
	196-C- 1
	196-C- 1
	196-D- 1
	196-D- 1
	196-E- 1
	196-E- 1
46079-10610	163-A- 1
	163-C- 1
	196- - 2
	196-A- 1
	196-B- 1
	196-C- 1
	196-D- 1
	196-E- 1
46079-27260	163- - 1
	163-B- 1
	163-D- 1
	196-A- 2
46080-73112	196- - 2
46084-18900	163- - 1
	163-B- 1
	163-D- 1
46090-10600	163- - 2
	163-B- 2
46090-10610	163-A- 1
	163-C- 1
46090-25510	196-D- 2
	196-E- 2
46091-E0310	196- - 2
	196-A- 1
	196-B- 2
	196-C- 2
	196-D- 2
	196-E- 2
46091-E0400	196-A- 2
46100-27260	163- - 1
	163-A- 1
	163-B- 2
	163-C- 1
	163-D- 1
	196- - 2
46103-73410	196- - 2
46123-E0101	195- - 2
46124-08700	195- - 2
46124-35100	191- - 2
	191-A- 1
46124-73000	195- - 2
46201-E0102	192-A- 5
	192-B- 5
46201-E0112	192-A- 5
	192-B- 6
	194- - 3
46201-E0113	194- - 3
46205-61000	162- - 2
	192-A- 5
	192-B- 6
	194- - 3
	194- - 3
46206-18000	162- - 2
	192-A- 6
	192-B- 6
	194- - 3
	194- - 3
46206-61000	162- - 2
46212-E0100	162- - 1
46212-E0200	162- - 1
46212-E1300	162- - 1
46212-E3200	162- - 1
46212-E3401	162- - 1
46212-73001	162- - 1
46212-73400	162- - 1
46212-75001	162- - 1
46214-73400	162- - 2
46215-E3200	162- - 2
46215-78100	162- - 2
46237-F0800	162- - 2
	192-A- 5
	192-B- 6
	194- - 3
	194- - 3
46237-18000	162- - 2
46237-30000	192-A- 5
	192-B- 6
46240-E0102	194- - 1
46240-E0103	194- - 1
46240-E1202	194- - 1
46242-E0104	194- - 1
46242-E1202	194- - 1
46252-F0102	194- - 1
46252-E0407	194- - 2
46252-E0702	194- - 2
46252-E1202	194- - 2
46252-E1301	194- - 2
46252-E1402	194- - 2
46253-E0101	194- - 1
46253-E1202	194- - 2
46255-E0200	194- - 1
46255-E0700	194- - 1
46257-21003	194- - 1
46280-E0101	194- - 2
46280-E3300	194- - 2
46282-E0101	194- - 2
46282-E0201	194- - 1
46282-E1202	194- - 1
46282-E3300	194- - 2
46284-E3200	194- - 1
46284-73005	194- - 1
46290-E0100	194- - 3
46290-E0101	194- - 3
46310-E0100	194- - 3
46310-E0101	194- - 3
46313-08701	194- - 3
46361-73000	194- - 3
46362-E0100	194- - 3
46363-E0100	194- - 3
46364-35000	194- - 1
46400-E0101	194- - 2
46410-E1301	162- - 2
46410-E3202	162- - 2
46410-E3702	162- - 3
46450-E0100	194- - 2
46510-E0100	195- - 1
46510-E0110	195- - 1
46510-E1200	195- - 1
46510-E1210	195- - 1
46518-E0100	195- - 1
	195- - 2
46520-E0100	195- - 1
46520-E0110	195- - 1
46520-E1200	195- - 1
46520-E1210	195- - 1
46525-73000	195- - 1
	195- - 1
46528-E0100	194- - 1
46531-73001	195- - 1
	195- - 1
46533-73000	195- - 1
46540-E0100	195- - 1
46540-E1200	195- - 1
46560-73000	195- - 1
	195- - 2
46571-73002	195- - 2

© 1972 NISSAN MOTOR CO., LTD.

REVISED: DECEMBER, 1972

PRINTED IN JAPAN

B-C

PART NUMBER INDEX

PUB. NO. C-0020

(CLASSIFIED BY PART NO.)

PART NO.	PAGE
46575-73002	195- - 2
46582-73000	195- - 1
	195- - 1
46585-E0100	195- - 2
46587-73000	195- - 2
46588-73001	195- - 2
47100-73500	123-C- 4
47200-E0100	197-A- 1
	197-A- 1
47200-E1200	197-A- 1
	197-A- 1
47200-E1400	197- - 1
47200-E1800	197- - 1
	197- - 1
47210-E0100	197-A- 1
	197-A- 1
47210-E0200	197- - 1
	197- - 1
47210-E0400	197- - 1
47210-E1200	197-A- 1
	197-A- 1
47210-E1400	197- - 1
47210-E1800	197- - 1
	197- - 1
47211-E0100	197-A- 1
	197-A- 1
47211-E0200	197- - 1
	197- - 1
47471-E0100	198- - 1
47471-E1200	198- - 1
47471-E1310	198- - 1
47471-E1800	198- - 1
47471-E3200	198- - 1
47471-E3300	198- - 1
47472-E0900	198- - 1
47473-E0900	198- - 2
47474-E0200	198- - 1
47474-E0600	198- - 1
47474-E0700	198- - 1
47474-E1200	198- - 1
	198- - 1
	198- - 2
47474-E1310	198- - 1
47474-E1800	198- - 1
47474-E3000	198- - 1
47475-E0210	198- - 2
47475-E0610	198- - 2
47475-E3300	198- - 2
47475-E3310	198- - 3
47475-E3311	198- - 3
47475-E3400	198- - 3
47475-F0601	198- - 2
47475-F0700	198- - 3
47475-F0701	198- - 3
47475-73002	198- - 2
47475-73402	198- - 2
47475-73403	198- - 2
47475-73601	198- - 3
47477-E0200	198- - 3
47477-E0900	198- - 3
47478-E0100	198- - 2
47478-E1200	198- - 2
47478-E3200	198- - 2
47478-E3300	198- - 2
47478-P0100	198- - 2
47478-P1700	198- - 2
47479-E0900	198- - 2
48010-E0150	202- - 1
48010-E0250	201- - 1
48010-E1250	202- - 1
48010-E1255	201- - 1
48010-E1750	201- - 1
48011-E0100	201- - 1
	202- - 1
48011-E1200	201- - 1
	202- - 1
48025-71200	201- - 2
	202- - 2
48029-04100	202- - 1
48029-71200	201- - 1
	202- - 1
48030-71200	201- - 1
	202- - 1
48031-71200	201- - 1
	202- - 1
48032-71200	201- - 1
	202- - 1
48035-71200	201- - 1
	202- - 1
48054-73000	201- - 2
48062-31300	201- - 1
	202- - 1
48064-27160	201- - 1
	202- - 1
48084-23100	202- - 4
48085-23100	202- - 4
48085-23125	202- - 4
	202- - 5
	202- - 5
	202- - 5
48085-23125	202- - 5
	202- - 5
48086-23100	202- - 4
48095-23100	202- - 5
48096-23100	202- - 5
48097-23100	202- - 5
48098-23100	202- - 5
48099-23100	202- - 5
48103-E0100	201- - 2
	202- - 6
48111-72000	201- - 2
	202- - 2
48127-71201	201- - 1
	202- - 1
48129-71200	201- - 2
	202- - 6
48130-71200	201- - 2
	202- - 6
48131-71200	201- - 2
	202- - 6
48132-71200	201- - 2
	202- - 6
48133-71200	201- - 2
	202- - 6
48134-71200	202- - 6
48135-32200	201- - 2
	202- - 6
48137-36700	201- - 1
	202- - 1
48141-72000	201- - 2
	202- - 2
48150-E0100	202- - 2
48150-E0200	201- - 2
48150-E1205	201- - 2
48150-E1700	201- - 2
48201-71200	201- - 1
	202- - 1
48204-71200	201- - 1
	202- - 1
48214-10600	203- - 1
48214-73000	201- - 3
	202- - 7
48250-E0100	202- - 1
48250-P0100	202- - 1
48321-E0100	216- - 1
	216-A- 1
	246- - 1
	246-A- 1
48322-E0100	216- - 1
	216-A- 1

B-C

PRINTED IN JAPAN

© 1972 NISSAN MOTOR CO., LTD.

REVISED: DECEMBER, 1972

PART NUMBER INDEX

PUB. NO. C-0020

(CLASSIFIED BY PART NO.)

PART NO.	PAGE
48322-E0100	246- - 1
	246-A- 1
48323-73001	216- - 1
	216-A- 1
	246- - 1
	246-A- 1
48324-E0101	216- - 1
	246- - 1
48324-E1100	216-A- 1
	246-A- 1
48325-E0101	216- - 1
	246- - 1
48325-E1100	216-A- 1
	246-A- 1
48340-E0205	176- - 3
	177- - 3
	178- - 2
48340-E1205	176-A- 3
	177-A- 3
	178-A- 2
48400-E0200	204- - 1
48418-30800	204- - 1
48419-30800	204- - 1
48420-E0200	204- - 1
48420-E0205	204- - 1
48426-73000	204- - 1
48427-73000	204- - 1
48429-73000	204- - 1
48435-73000	204- - 1
48440-73000	204- - 1
48441-73000	204- - 1
48451-73000	204- - 1
48452-73000	204- - 1
48460-E0100	204- - 3
	204- - 3
	204- - 3
48460-E1200	204- - 3
	204- - 3
	204- - 3
48470-E0100	204- - 1
48470-E0200	204- - 1
48470-E1200	204- - 1
48470-E1300	204- - 1
48470-E3200	204- - 1
48470-E3201	204- - 1
48474-21200	204- - 1
48474-21201	204- - 2
48479-E0100	204- - 2
	204- - 2
48479-E1200	204- - 2
48479-E1200	204- - 2
48496-73000	204- - 1
48502-73001	203- - 1
48502-75001	203- - 1
48510-E0100	203- - 1
48512-E0100	203- - 2
48514-78500	203- - 2
48520-E0100	203- - 2
48521-E0100	203- - 2
48522-21000	203- - 1
	203- - 2
48524-21000	203- - 1
48530-E0100	203- - 1
48530-E0101	203- - 1
48530-P0300	203- - 1
48548-18000	203- - 1
	203- - 2
48560-E0101	203- - 1
48560-E1200	203- - 1
48587-21001	203- - 1
48630-E0100	203- - 2
48700-A1100	204- - 2
	204- - 2
	204- - 2
48700-A2300	204- - 2
	204- - 3
	204- - 3
48700-E4400	204- - 2
	204- - 2
	204- - 2
48700-29029	204- - 3
	204- - 3
	204- - 3
48801-E0130	202- - 2
48801-E0152	202- - 2
48801-E0352	202- - 2
48801-E0452	202- - 2
48801-E1231	202- - 2
48801-E1252	202- - 2
48801-E1352	202- - 2
48801-E1452	202- - 2
48801-E3230	202- - 3
48801-E3250	202- - 2
48801-E3255	202- - 3
48801-E3330	202- - 3
48801-E3350	202- - 3
48801-E3355	202- - 2
	202- - 3
48810-E0102	202- - 6
48810-E1202	202- - 6
48820-E1202	202- - 6
48830-E1201	202- - 4
48846-E0200	201- - 2
48848-E0200	201- - 2
48860-E0102	202- - 6
48860-E0200	201- - 1
48860-E1202	202- - 6
48860-E1205	201- - 1
48870-E0101	202- - 5
48870-E1201	202- - 5
48870-E3250	202- - 5
48870-E3350	202- - 5
48891-23100	202- - 5
48931-23100	202- - 6
48934-23101	202- - 6
48954-E1201	202- - 5
48955-E1201	202- - 5
48960-E0101	202- - 5
48960-E1201	202- - 5

B-C

© 1972 NISSAN MOTOR CO., LTD.

REVISED: DECEMBER, 1972

PRINTED IN JAPAN

PART NUMBER INDEX

(CLASSIFIED BY PART NO.)

PART NO.	PAGE
50000	
54010-73000	182- - 3
	182- - 3
	182- - 3
	182- - 4
54010-73001	182- - 3
	182- - 3
	182- - 4
	182- - 4
	182- - 4
	182- - 4
54010-73002	182- - 3
	182- - 3
	182- - 3
	182- - 3
	182- - 3
	182- - 4
	182- - 4
	182- - 4
54010-73003	182- - 3
	182- - 3
	182- - 4
54010-73004	182- - 4
54010-73200	182- - 3
	182- - 4
	182- - 4
54010-73201	182- - 4
54036-73000	182- - 4
54038-73000	182- - 4
54039-73000	145- - 2
	145- - 6
	145-A- 3
	145-B- 2
	145-B- 5
	146- - 6
	182- - 4
54050-73001	182- - 1
54053-73001	182- - 2
54054-73001	182- - 2
54401-E0100	182- - 2
54401-E0900	182- - 2
54401-E0910	182- - 2
54401-E3200	182- - 2
54401-E3400	182- - 2
54401-73510	182- - 2
54419-73000	182- - 1
54460-73001	182- - 3
54464-73001	182- - 3
54466-73001	182- - 3
54467-73001	182- - 3
54504-73001	182- - 1
54507-73001	182- - 2
54509-73001	182- - 2
54510-73001	182- - 2
54511-73001	182- - 2
54522-73001	182- - 2
54529-73000	182- - 1
54530-73000	182- - 1
54533-P0600	182- - 1
54533-73000	182- - 1
54536-73000	182- - 1
54539-73001	182- - 1
54540-73001	182- - 1
54541-73001	182- - 1
54542-32201	182- - 2
54543-32201	182- - 2
54544-32200	182- - 2
54545-P0600	182- - 1
54545-32200	182- - 2
54545-73000	182- - 1
54611-73000	182- - 5
54611-73200	182- - 5
54613-73000	182- - 5
54613-73200	182- - 5
54614-32200	184- - 7
54614-73000	182- - 5
54617-73001	182- - 5
54618-E0100	182- - 5
55020-E0800	184- - 1
	184- - 1
	184- - 1
55020-E0801	184- - 1
	184- - 1
55020-E3400	184- - 1
	184- - 1
55020-73000	184- - 1
	184- - 1
55020-73001	184- - 1
	184- - 1
55020-73200	184- - 1
55020-73300	184- - 1
55021-E0800	184- - 1
55021-73000	184- - 1
	184- - 1
55021-73001	184- - 1
	184- - 1
55021-73200	184- - 1
55021-73300	184- - 1
55021-78000	184- - 2
55021-78001	184- - 2
55022-73000	184- - 2
	184- - 2
55022-73001	184- - 2
	184- - 2
55022-73200	184- - 2
55022-73300	184- - 2
55022-78000	184- - 2
	184- - 2
55022-78001	184- - 2
55023-73000	184- - 2
	184- - 2
55023-73001	184- - 2
	184- - 2
55023-73200	184- - 2
55023-73300	184- - 2
55023-78000	184- - 2
	184- - 2
55023-78001	184- - 2
55024-73000	184- - 2
	184- - 2
55024-73001	184- - 3
	184- - 3
55024-73200	184- - 3
55024-73300	184- - 3
55024-78000	184- - 3
	184- - 3
55024-78001	184- - 3
55025-73000	184- - 3
	184- - 3
55025-73001	184- - 3
	184- - 3
55025-73200	184- - 3
55025-73300	184- - 3
55025-78000	184- - 3
	184- - 3
55025-78001	184- - 3
55026-78000	184- - 3
55026-78001	184- - 3
55040-32200	184- - 4
	184- - 4
55045-73000	184- - 3
55046-P0101	184- - 5
55046-73000	184- - 5
55048-66000	184- - 3
55048-73200	184- - 3
55048-73300	184- - 3
55049-66000	184- - 4

© 1972 NISSAN MOTOR CO., LTD.

REVISED: DECEMBER, 1972

PRINTED IN JAPAN

PART NUMBER INDEX

(CLASSIFIED BY PART NO.)

PART NO.	PAGE
55049-66000	184- - 4
55049-73200	184- - 4
55052-39900	184- - 4
55054-73000	184- - 5
55056-66000	184- - 4
55056-73010	184- - 4
55057-73000	184- - 4
55057-73210	184- - 4
55057-73300	184- - 4
55057-78000	184- - 4
55202-73001	184- - 4
55203-73001	184- - 4
55220-73000	184- - 5
55222-73000	184- - 5
55224-73001	184- - 4
55240-73000	184- - 5
55242-73000	184- - 5
55243-E0800	184- - 5
55243-73000	184- - 5
55247-36700	184- - 5
55247-36701	184- - 5
55247-73200	184- - 5
55262-73000	184- - 5
55266-73000	184- - 5
55350-73000	184- - 7
56110-73026	182- - 6
56110-77726	182- - 6
56112-09400	184- - 6
56112-21000	182- - 6
	184- - 6
56113-09400	184- - 6
56113-73000	182- - 6
	184- - 6
56114-09400	184- - 6
56114-73001	182- - 6
	184- - 6
56119-32201	184- - 6
	184- - 7
56127-50000	182- - 6
56210-73026	184- - 5
56210-73225	184- - 5
56210-77725	184- - 6
56210-77725-01	184- - 6
56225-10601	184- - 6
	184- - 7
56227-73000	184- - 6
56230-73001	184- - 6
56243-73000	184- - 7
56260-73000	184- - 6

60000

PART NO.	PAGE
62301-E0201	212- - 1
	212- - 1
	242- - 1
62301-E0300	212- - 1
	242- - 1
62301-E3200	212- - 1
62310-E3100	271- - 1
62311-E0100	271- - 1
	271- - 1
62311-E0300	271- - 1
62311-E0700	271- - 1
62313-E0200	271- - 1
62328-32200	216- - 2
	216- - 2
	216-A- 2
	216-A- 2
	246- - 2
	246- - 3
	246-A- 2
	246-A- 2
62330-E0201	271- - 1
	271- - 1
62330-E0301	271- - 1
62330-E3201	271- - 1
62340-E3200	271- - 1
62351-E0100	212- - 2
	242- - 1
62351-E0199	212- - 2
	242- - 1
62352-E0100	212- - 2
	242- - 1
62352-E0199	212- - 2
	242- - 1
62353-E0100	212- - 2
	242- - 2
62354-E0100	212- - 2
	242- - 2
62392-E0100	212- - 1
62392-E0200	212- - 1
	212- - 1
	242- - 1
62392-E0300	212- - 1
	242- - 1
62393-E0100	212- - 1
62393-E0200	212- - 1
	212- - 1

PART NO.	PAGE
62393-E0200	242- - 1
62393-E0300	212- - 1
	242- - 1
62410-E0100	212- - 1
	242- - 1
62410-E0300	212- - 1
	242- - 1
62411-E0100	212- - 2
	242- - 1
62411-E0300	212- - 2
	242- - 1
62500-E3200	212- - 2
	242- - 2
62511-E0100	212- - 2
	242- - 2
62516-E0100	212- - 2
	242- - 2
62531-E0100	212- - 2
	242- - 2
62531-E0101	212- - 2
	242- - 2
62532-E0100	212- - 2
	242- - 2
62610-E0100	212- - 4
	242- - 4
62651-E0100	212- - 3
	242- - 2
62666-73000	212- - 3
	212- - 4
	234- - 3
	242- - 3
	242- - 3
	255- - 1
62676-E0100	212- - 3
	242- - 3
62676-E0150	212- - 3
	212- - 3
	242- - 2
	242- - 3
62677-E0100	212- - 3
	242- - 3
62677-E0150	212- - 3
	242- - 3
	242- - 3
62681-E0100	212- - 3
	242- - 2
62682-E0100	212- - 3
	242- - 2
62691-E0100	212- - 3
	242- - 2

© 1972 NISSAN MOTOR CO., LTD.

REVISED: DECEMBER, 1972

PRINTED IN JAPAN

PART NUMBER INDEX

PUB. NO. C-0020

(CLASSIFIED BY PART NO.)

PART NO.	PAGE
62691-E3200	212- - 3
62692-E0100	212- - 3
	242- - 2
62692-E3200	212- - 3
63100-E1331	213- - 1
	243- - 1
63101-E1331	213- - 1
	243- - 1
63146-73000	213- - 1
	243- - 1
63150-E0100	213- - 1
	243- - 1
63151-E0100	213- - 1
	243- - 1
63801-E3100	271- - 2
63801-E3101	271- - 2
63801-69800	271- - 1
63801-69801	271- - 1
63801-73000	271- - 1
	271- - 1
63801-73501	271- - 1
63801-75400	271- - 1
	271- - 2
63802-73101	271- - 2
63802-73301	271- - 2
63802-73402	271- - 2
63802-73500	271- - 2
63802-78000	271- - 2
63802-78001	271- - 2
63831-10600	212- - 2
	242- - 1
63840-46500	212- - 3
	242- - 2
63840-73000	212- - 3
	242- - 2
63845-E0101	213- - 1
	243- - 1
63845-18000	271- - 1
63858-E0100	213- - 1
	243- - 1
63860-E0100	213- - 1
	243- - 1
64100-E0100	213- - 1
	243- - 1
64100-E3200	213- - 1
	243- - 1
64101-E0100	213- - 1
	243- - 1
64101-E3200	213- - 1
	243- - 1
64803-E0100	213- - 3
	243- - 3
64804-E0100	213- - 3
	243- - 3
64811-58000	242- - 3
64821-32200	213- - 3
	226- - 1
	243- - 3
	250- - 2
64821-73000	145- - 6
	145-B- 6
64836-E0101	213- - 2
	243- - 2
64836-69000	213- - 3
	243- - 3
64836-73001	213- - 2
	213- - 3
	243- - 2
64837-E0101	213- - 2
	243- - 2
64837-E1200	213- - 2
	243- - 2
64838-E0101	133-A- 1
	213- - 3
	243- - 2
64840-E0100	213- - 3
	243- - 3
65100-E0130	213- - 3
	243- - 3
65400-E0125	213- - 3
	243- - 3
65401-E0125	213- - 3
	243- - 3
65410-E0199	213- - 3
	243- - 3
65601-E0100	214- - 1
	244- - 1
65610-E0100	214- - 1
	244- - 1
65610-E1100	214- - 1
	244- - 1
65649-E2000	214- - 1
	244- - 1
65649-10600	214- - 1
	244- - 1
65701-E0100	214- - 1
	244- - 1
65701-E1100	214- - 1
	244- - 1
65705-E0100	214- - 1
65705-E0100	244- - 1
65705-E1100	214- - 1
	244- - 2
65712-E0100	214- - 1
	244- - 1
65820-E0100	213- - 3
	243- - 3
65821-E0100	213- - 3
	243- - 3
65822-E0100	213- - 3
	243- - 3
65823-E0100	213- - 4
	243- - 3
66100-E0150	223- - 1
	252- - 2
66101-E0150	223- - 1
	252- - 2
66174-01500	222- - 2
66300-E0130	215- - 1
	245- - 1
66300-E1130	215- - 1
	245- - 1
66312-10600	215- - 2
	245- - 2
66400-E0100	216- - 2
	216-A- 1
	246- - 2
	246-A- 1
66401-E0100	216- - 2
	216-A- 2
	246- - 2
	246-A- 1
66408-E0100	216- - 2
	216-A- 2
	246- - 2
	246-A- 2
66409-E0100	216- - 2
	216-A- 2
	246- - 2
	246-A- 2
66415-E0100	214- - 2
	244- - 2
66416-E0100	214- - 2
	244- - 2
66501-73000	215- - 1
	245- - 1
66502-73000	215- - 1
	245- - 1
66512-73050	215- - 1
	215- - 1

© 1972 NISSAN MOTOR CO., LTD.

REVISED: DECEMBER, 1972

PRINTED IN JAPAN

B-C

PART NUMBER INDEX

PUB. NO. C-0020

(CLASSIFIED BY PART NO.)

PART NO.	PAGE
66512-73050	245- - 1
	245- - 1
	245- - 1
66513-73000	215- - 1
	245- - 1
66514-73000	215- - 1
	245- - 1
66532-E0101	215- - 1
	245- - 1
66534-73000	215- - 1
	245- - 1
66539-E0101	215- - 1
	245- - 1
66540-E0101	215- - 1
	245- - 1
66545-E0101	215- - 1
	245- - 1
66546-E0101	215- - 1
	245- - 1
66554-E0100	215- - 2
	245- - 2
66555-E0100	215- - 2
	245- - 2
66555-E1200	215- - 2
	245- - 2
66558-E0100	215- - 2
66558-E0101	145- - 6
	145-B- 6
	215- - 2
66559-E0101	145- - 6
	145-B- 6
	215- - 2
66562-E0100	215- - 1
	245- - 1
66563-E0100	215- - 1
	245- - 2
66590-E0100	145- - 2
	145- - 6
	145-A- 3
	145-B- 2
	145-B- 5
	215- - 2
	245- - 2
66801-E0101	215- - 2
66801-E0151	215- - 2
	245- - 2
66801-E1101	215- - 2
66801-E1151	215- - 2
	245- - 2
66810-E0100	215- - 2
66810-E0100	245- - 2
66822-E0101	215- - 2
	245- - 2
66900-E0100	215- - 2
	245- - 2
66900-E0101	215- - 2
	245- - 2
66900-E0102	215- - 2
	245- - 2
66900-E0103	215- - 2
	245- - 2
66900-E0500	215- - 3
	245- - 3
66901-E4900	215- - 3
	245- - 2
66901-E4901	215- - 3
	245- - 2
66901-E4902	215- - 3
	245- - 2
66901-E4903	215- - 3
	245- - 3
66901-E4904	215- - 3
	245- - 3
67101-E0130	216- - 1
	246- - 1
67101-E0930	216- - 1
67101-E1130	216-A- 1
	246-A- 1
67101-E3230	216- - 1
	246- - 1
67101-E3330	216-A- 1
67102-E0130	216- - 1
	246- - 1
67102-E1130	216-A- 1
	246-A- 1
67116-E0150	216- - 1
	216-A- 1
	246- - 1
	246-A- 1
67831-32200	222- - 2
67900-E0100	217- - 1
	247- - 1
67900-E1200	217-A- 1
	247-A- 1
67900-E1201	217-A- 1
67900-E3200	217- - 1
	247- - 1
67901-E0100	217- - 1
	247- - 1
67901-E0300	217- - 1
67901-E0300	247- - 1
67901-E1200	217-A- 1
	247-A- 1
67901-E3200	217- - 1
67901-E3400	217- - 1
	247- - 1
67902-E0100	217- - 1
	247- - 1
67902-E3200	217- - 1
	247- - 1
67930-73000	217- - 1
	217-A- 1
	247- - 1
	247-A- 1
68100-E0100	216- - 1
	246- - 1
68100-E1200	216-A- 1
	246-A- 1
68210-E0100	217- - 1
	217-A- 1
	247- - 1
	247-A- 1
68240-E0101	217- - 1
	247- - 2
68240-E1201	217-A- 1
	247-A- 1
68250-E0101	217- - 1
	247- - 2
68250-E1201	217-A- 1
	247-A- 1
68270-E0100	217- - 2
	247- - 2
68270-E1200	217-A- 1
	247-A- 1
68280-E0100	217- - 2
	247- - 2
68280-E1200	217-A- 1
	247-A- 1
68295-89900	217- - 2
	217-A- 1
	247- - 2
	247-A- 1
68310-E0100	217- - 3
	217-A- 3
	247- - 4
	247-A- 2
68410-E0301	217- - 2
	247- - 3
68410-E0600	217- - 2
68410-E1301	217-A- 2

© 1972 NISSAN MOTOR CO., LTD.

REVISED: DECEMBER, 1972

PRINTED IN JAPAN

B-C

PART NUMBER INDEX

(CLASSIFIED BY PART NO.)

PUB. NO. C-0020

PART NO.	PAGE
68410-E1301	247-A- 2
68410-E1302	217-A- 2
	247-A- 2
68410-E1700	217- - 2
	247- - 3
68410-E1800	217-A- 2
68410-E1801	217-A- 2
68460-E0302	217- - 2
	217-A- 2
	247- - 3
	247-A- 2
68470-E0301	217- - 3
	217-A- 2
	247- - 3
	247-A- 2
68490-E0100	204- - 3
	204- - 3
	204- - 3
	217- - 3
	217-A- 2
	247- - 4
	247-A- 2
68510-E0100	217- - 3
	247- - 4
68510-E1200	217-A- 3
	247-A- 3
68515-E0100	217- - 3
	247- - 4
68515-E1200	217-A- 3
	247-A- 3
68530-E0100	217- - 3
	247- - 4
68530-E0101	145- - 2
	145- - 6
	145-A- 3
	145-B- 6
	217- - 3
	247- - 4
68530-E1200	217-A- 3
	247-A- 3
68530-E1201	217-A- 3
	247-A- 3
68560-E0100	217- - 4
	217-A- 3
	247- - 4
	247-A- 3
68570-E0100	217- - 4
	217-A- 3
	247- - 5
	247-A- 3
68630-E0100	217- - 4
	217-A- 3
	247- - 5
	247-A- 3
	272- - 2
68635-E0100	217- - 4
	247- - 5
	247-A- 3
68640-E0100	217- - 4
	217-A- 3
	247- - 5
	247-A- 3
68643-32200	255- - 1
68685-38700	215- - 1
	245- - 1
68710-E0101	144- - 3
	144- - 3
	144-A- 2
	144-B- 2
	144-C- 2
68725-E0101	144- - 3
68726-E0101	144- - 3
	144-A- 2
	144-B- 2
	144-C- 2
68750-E0100	144- - 4
	144-A- 3
	144-B- 2
	144-C- 2
68800-E0100	216- - 2
	246- - 3
68800-E1200	216-A- 2
	246-A- 2
68877-73000	217- - 3
	217-A- 3
	247- - 4
	247-A- 2
68880-89902	144- - 4
	144-A- 3
	217- - 2
	217- - 3
	217-A- 2
	247- - 2
	247- - 3
	247-A- 2
	247-A- 2
68990-E1300	271- - 3

70000

PART NO.	PAGE
72105-E0100	223- - 1
	252- - 2
72106-E0100	223- - 1
	252- - 2
72115-E0100	223- - 1
	252- - 2
72116-E0100	223- - 1
	252- - 2
72610-E0100	218- - 1
	248- - 1
72613-E0100	218- - 1
	248- - 1
72613-E0101	218- - 1
	248- - 1
72613-E0700	218- - 1
	248- - 1
72613-E0701	218- - 1
	248- - 1
72613-E1100	218- - 1
	248- - 1
72613-E1300	218- - 1
	248- - 1
72810-E0100	218- - 1
	248- - 1
72811-E0100	218- - 1
	248- - 1
72812-E0100	218- - 1
	248- - 1
72813-73000	218- - 1
	227- - 1
	248- - 1
72814-E0100	218- - 1
	248- - 1
72816-E0100	218- - 1
	248- - 1
72817-E0100	218- - 1
	248- - 1
72832-32200	225- - 1
	225- - 1
	254- - 2
73100-E0130	219- - 1
73111-E0430	249- - 1
73112-E0400	249- - 1
73112-E0430	249- - 1
73113-E0400	249- - 1
73113-E0430	249- - 1

B-C

PRINTED IN JAPAN

© 1972 NISSAN MOTOR CO., LTD.

REVISED: DECEMBER, 1972

PART NUMBER INDEX

PUB. NO. C-0020

(CLASSIFIED BY PART NO.)

PART NO.	PAGE
73210-E0100	219- - 1
	249- - 1
73222-E0100	219- - 1
	249- - 1
73224-E0400	249- - 1
73230-E0100	219- - 1
73230-E0400	249- - 1
73240-E0150	219- - 1
73240-E0450	249- - 1
73241-E0150	219- - 1
73241-E0450	249- - 1
73244-E0100	219- - 1
73250-E0100	219- - 1
73251-E0100	219- - 1
73800-E0100	225- - 1
73800-E0500	254- - 1
73801-E0100	225- - 1
73801-E0500	254- - 1
73910-E0100	219- - 1
73910-E0400	249- - 1
73914-E0100	219- - 1
73914-E0300	219- - 2
73915-E0100	219- - 2
73915-E0300	219- - 2
73918-E0400	249- - 2
73918-10601	224- - 2
	253- - 2
73921-E0100	219- - 1
	249- - 1
73922-E0100	219- - 1
73923-E0400	249- - 1
73930-E0100	219- - 1
	249- - 1
73930-E0110	219- - 1
	249- - 1
73931-E0100	219- - 1
	249- - 1
73931-E0110	219- - 1
	249- - 1
73932-E0100	219- - 1
73932-E0110	219- - 1
73932-E0400	249- - 1
73932-E0410	249- - 1
73933-E0400	249- - 1
73933-E0410	249- - 1
73934-E0400	249- - 2
73934-E0410	249- - 2
73936-E0100	219- - 1
	249- - 2
73937-E0100	219- - 1
73937-E0100	249- - 2
73938-73000	219- - 1
	249- - 2
73939-E0101	219- - 1
73939-E0400	249- - 2
73940-E0101	219- - 2
	249- - 2
73940-78800	253- - 4
73941-E0100	219- - 2
	249- - 2
73941-E0101	219- - 2
73948-E0100	219- - 2
73949-E0100	219- - 2
74311-73030	220- - 1
	250- - 1
74330-73050	220- - 1
	250- - 1
74340-73000	220- - 1
	250- - 1
74341-73000	220- - 1
	220- - 1
	250- - 1
74365-E0100	222- - 2
74365-E0400	251-A- 2
74365-73000	222- - 2
	251-A- 2
74500-E0530	250- - 1
74510-E0130	220- - 1
74513-E0451	250- - 1
74517-73200	250- - 1
74520-89900	250- - 1
	254- - 1
74530-E0100	220- - 1
74530-73200	250- - 2
74554-73200	250- - 1
74557-73200	250- - 1
	250- - 2
74586-E0400	250- - 1
74595-E0400	250- - 2
74616-34900	267- - 1
74801-E0130	220- - 1
	250- - 2
74802-E1130	220- - 1
	250- - 2
74840-E0100	220- - 1
	250- - 2
74851-E0430	250- - 2
	250- - 2
74851-E0830	220- - 1
74852-E0830	220- - 1
74852-73230	250- - 2
74880-73200	250- - 2
74883-73000	220- - 1
	250- - 2
74884-73000	220- - 1
	250- - 2
74891-E0100	220- - 1
	250- - 2
74902-E0100	221- - 1
74902-E0101	221- - 1
74902-E0102	221- - 1
74902-E0103	221- - 1
74902-E0200	221- - 1
74902-E0201	221- - 1
	251- - 1
74902-E0202	221- - 1
74902-E0203	221- - 1
74902-E0303	222- - 1
	251-A- 1
74902-E0313	222- - 1
74902-E0500	251- - 1
74902-E1200	221- - 2
74902-E1201	221- - 2
74902-E1203	221- - 2
74902-F1204	221- - 2
74902-E1205	221- - 2
	251- - 1
74902-E1206	221- - 2
74902-E1207	221- - 2
74902-F1303	222- - 1
	251-A- 1
74902-E1313	222- - 1
74903-E0100	221- - 1
74903-E0101	221- - 1
74903-E0102	221- - 1
74903-E0103	221- - 1
74903-E0200	221- - 1
74903-E0201	221- - 1
	251- - 1
74903-E0202	221- - 1
74903-E0203	221- - 2
74903-E0313	222- - 1
74903-E0500	251- - 1
74903-E1200	221- - 2
74903-F1201	221- - 2
74903-E1203	221- - 2
74903-E1204	221- - 2
74903-E1205	221- - 2
	251- - 1
74903-E1206	221- - 2

© 1972 NISSAN MOTOR CO., LTD.

REVISED: DECEMBER, 1972

PRINTED IN JAPAN

B-C

PART NUMBER INDEX

PUB. NO. C-0020

(CLASSIFIED BY PART NO.)

PART NO.	PAGE
74903-E1206	221- - 2
74903-E1207	221- - 2
74903-E1313	222- - 1
74904-E0104	221- - 3
74904-E0105	221- - 3
74904-E0200	221- - 3
	221- - 3
74904-E0201	221- - 3
	221- - 3
	251- - 1
74904-E0202	221- - 3
	221- - 3
74904-E0203	221- - 3
	221- - 3
74904-E0313	222- - 1
74904-E0500	251- - 1
74904-69002	221- - 3
74904-69102	221- - 3
74905-E0100	221- - 3
74905-E0101	221- - 3
74905-E0102	221- - 3
74905-E0103	221- - 4
74905-E0303	222- - 1
74905-E0401	251-A- 1
74905-E0500	251- - 1
74905-E0501	251- - 1
74905-E3500	251- - 1
74906-E0101	221- - 4
74906-E0200	221- - 4
74906-E0201	221- - 4
	251- - 1
74906-E0202	221- - 4
74906-E0203	221- - 4
74906-E0303	222- - 1
74906-E0313	222- - 1
74907-E0100	221- - 4
74907-E0101	221- - 4
74907-E0102	221- - 4
74907-E0103	221- - 4
74907-E0200	221- - 4
74907-E0201	221- - 4
74907-E0202	221- - 4
74907-E0203	221- - 4
74907-E0313	222- - 1
74908-E0105	221- - 5
74908-E0200	221- - 5
74908-E0201	221- - 5
74908-E0202	221- - 5
74908-E0203	221- - 5
74908-E0500	251- - 1
74910-E0101	251- - 2
74910-E0111	251- - 1
74910-E0112	221- - 5
74910-E0114	251- - 1
74910-E0310	222- - 1
	251-A- 1
	251-A- 1
74911-E0101	251- - 2
74911-E0111	251- - 2
74911-E0112	221- - 5
74911-E0310	251-A- 1
	251-A- 1
74912-E0101	251- - 2
74912-E0110	221- - 5
74912-E0111	221- - 5
	251- - 2
74912-E0112	221- - 5
74912-E0113	221- - 5
74912-E0114	251- - 2
74912-E0310	222- - 1
	251-A- 1
	251-A- 1
74913-E0101	251- - 2
74913-E0110	221- - 5
74913-E0111	221- - 5
	251- - 2
74913-E0112	221- - 5
74913-E0113	221- - 5
74913-E0114	251- - 2
74913-E0310	251-A- 1
	251-A- 1
74915-32200	221- - 4
	221- - 5
	251-A- 1
	251-A- 1
74919-36701	222- - 1
74920-E0110	251-A- 1
74920-E0111	145- - 2
	145-A- 3
	145-B- 3
	146- - 2
	146-A- 3
	146-B- 2
74920-E1210	251-A- 2
74921-E0110	251-A- 1
74921-E1210	251-A- 2
74922-E0110	251-A- 2
74923-E0110	251-A- 2
74925-E0100	251-A- 2
74925-E0110	251-A- 2
74925-65000	145- - 2
74925-78002	145- - 2
	145- - 6
	145-A- 3
	145-B- 3
	145-B- 6
	146- - 2
	146- - 6
	146-A- 3
	146-B- 2
74926-78002	145- - 2
	145- - 6
	145-A- 3
	145-B- 3
	145-B- 6
	146- - 2
	146- - 6
	146-A- 3
	146-B- 2
74927-E0110	251-A- 2
74927-78001	145- - 2
	145- - 7
	145-A- 3
	145-B- 3
	145-B- 6
	146- - 2
	146- - 6
	146-A- 3
	146-B- 2
74928-78001	145- - 2
	145- - 7
	145-A- 3
	145-B- 3
	145-B- 6
	146- - 2
	146- - 6
	146-A- 3
	146-B- 2
74931-73001	222- - 2
74932-78000	222- - 1
	251-A- 2
74933-30000	222- - 1
	251-A- 1
74933-73001	222- - 1
	251-A- 2
74934-73001	251-A- 2
74938-73001	222- - 2
74938-73200	251-A- 1
	251-A- 2
74939-73001	222- - 2

© 1972 NISSAN MOTOR CO., LTD.

REVISED: DECEMBER, 1972

PRINTED IN JAPAN

B-C

PART NUMBER INDEX

(CLASSIFIED BY PART NO.)

PUB. NO. C-0020

PART NO.	PAGE
74940-E0400	253- - 4
74940-E0401	253- - 4
74940-E0402	253- - 4
74941-E0400	253- - 4
74941-E0401	253- - 4
74941-E0402	253- - 4
74942-E0400	253- - 4
74942-04100	250- - 1
	250- - 2
74942-09500	222- - 2
	250- - 1
74942-10900	145-B- 5
74945-65000	145- - 7
	145-A- 4
	145-B- 3
	146- - 2
	146- - 6
	146-A- 3
	146-B- 2
74945-65001	145-B- 6
74960-E0401	251-A- 2
74960-E0500	251-A- 2
74985-E0400	251-A- 2
74986-E0401	251-A- 2
74986-36700	222- - 2
	222- - 2
	251-A- 2
74990-73000	237- - 2
74991-73000	222- - 2
	251-A- 2
74992-73000	222- - 2
	251-A- 2
74993-73000	222- - 2
	250- - 1
76000-E0430	252- - 1
76001-E0430	252- - 1
76300-E0430	252- - 1
	252- - 1
76322-E0450	252- - 1
76323-E0450	252- - 1
76326-E0400	252- - 1
	262- - 2
76332-E0450	252- - 1
76333-E0450	252- - 1
76351-E0400	252- - 1
76400-73030	223- - 1
	252- - 1
76401-73030	223- - 1
	252- - 1
76482-73002	225- - 1

PART NO.	PAGE
76482-73002	254- - 1
76483-73002	225- - 1
	254- - 1
76486-10603	225- - 1
	254- - 1
76488-73001	225- - 1
	254- - 1
76489-73000	225- - 1
	254- - 1
76500-E0100	223- - 1
	252- - 1
76501-E0100	223- - 1
	252- - 1
76610-E0100	223- - 1
76611-E0100	223- - 1
76613-E0400	252- - 1
76614-E0400	252- - 1
76620-E0150	223- - 1
76621-E0150	223- - 1
76626-E0400	252- - 1
	262- - 2
76700-E0130	223- - 1
76700-E0430	252- - 1
76701-E0130	223- - 1
76701-E0430	252- - 2
76720-E0100	223- - 1
76721-E0100	223- - 2
76731-E0130	223- - 1
76731-E0400	252- - 1
76732-E0130	223- - 1
76732-E0400	252- - 1
76800-E0100	225- - 1
76801-E0100	225- - 1
76802-E0100	225- - 1
76802-E0700	225- - 1
76803-E0100	225- - 1
76803-E0700	225- - 1
76805-E0100	254- - 1
76806-E0100	254- - 1
76810-E0400	262- - 2
76815-P0100	225- - 1
76815-73000	225- - 1
76816-73000	228- - 4
	231- - 2
	256- - 4
	259- - 2
76817-E0400	262- - 2
76818-73100	225- - 1
76821-E0400	262- - 1
76822-E0400	262- - 2

PART NO.	PAGE
76827-E0400	262- - 2
76831-E0400	262- - 1
76832-E0400	262- - 2
76833-E0500	262- - 1
76833-E1400	262- - 1
76834-E0400	262- - 1
76834-E0500	262- - 1
76834-E1400	262- - 1
76835-E0400	262- - 1
76835-E0500	262- - 1
76836-E0400	262- - 1
76837-E0400	262- - 1
76842-73200	254- - 1
76843-73200	254- - 1
76844-73200	254- - 1
76845-73200	254- - 1
76847-73200	254- - 1
76849-E0400	254- - 1
76870-E0400	262- - 1
76871-E0400	262- - 2
76872-E0400	262- - 1
76873-E0400	262- - 2
76874-E0400	262- - 1
76875-E0400	262- - 2
76876-E0400	262- - 1
76878-E0400	262- - 1
76879-E0400	262- - 2
76880-E0400	262- - 2
76883-E0400	262- - 2
76884-E0400	262- - 2
76887-E0400	262- - 2
76888-E0400	262- - 2
76900-E0400	253- - 3
76900-E0401	253- - 3
76900-E0500	253- - 3
76900-E0501	253- - 3
76901-E0400	253- - 3
76901-E0401	253- - 3
76901-E0500	253- - 3
76901-E0501	253- - 3
76905-E0500	253- - 4
76905-E0501	253- - 4
76906-E0500	253- - 4
76906-E0501	253- - 4
76907-E0500	253- - 5
76908-E0500	253- - 5
76911-E0100	224- - 3
	253- - 4
76912-E0100	224- - 3
	253- - 5

B-C

PRINTED IN JAPAN

© 1972 NISSAN MOTOR CO., LTD.

REVISED: DECEMBER, 1972

PART NUMBER INDEX

(CLASSIFIED BY PART NO.)

PART NO.	PAGE
76913-E0101	224- - 1
	253- - 1
76913-E0102	224- - 1
	253- - 1
76913-E0103	224- - 1
	253- - 1
76913-E0104	224- - 1
	253- - 1
76913-E0105	224- - 1
	253- - 1
76914-E0101	224- - 1
	253- - 1
76914-E0102	224- - 1
	253- - 1
76914-E0103	224- - 2
	253- - 1
76914-E0104	224- - 2
	253- - 1
76914-E0105	224- - 2
	253- - 2
76915-E0500	253- - 3
76916-E0500	253- - 3
76917-E0101	224- - 2
76917-E0400	253- - 2
76917-E0401	253- - 2
76917-E0402	253- - 2
76918-E0101	224- - 2
76918-E0400	253- - 2
76918-E0401	253- - 2
76918-E0402	253- - 2
76921-E0105	224- - 1
	253- - 1
76921-E0106	224- - 1
	253- - 1
76921-E0107	224- - 1
76921-E0108	224- - 1
	253- - 1
76922-E0105	224- - 1
76922-E0106	224- - 1
76922-E0107	224- - 1
76922-E0108	224- - 1
76922-E0405	253- - 1
76922-E0406	253- - 1
76922-E0408	253- - 1
76948-E0400	253- - 3
76949-E0400	253- - 3
76951-E0100	224- - 2
76951-E1100	224- - 2
	253- - 2
76952-E0100	224- - 2
76952-E1100	224- - 2
	253- - 2
76953-E0100	224- - 2
76953-E1100	224- - 2
	253- - 2
76954-E0100	224- - 2
76954-E1100	224- - 2
	253- - 2
76958-E0100	224- - 2
	253- - 2
76959-73001	224- - 2
	253- - 2
77700-89903	250- - 2
77700-89916	213- - 3
	243- - 3
77700-89919	213- - 1
	243- - 1
77710-89909	212- - 1
77710-89910	212- - 2
	242- - 1
77710-89911	212- - 1
	212- - 2
	212- - 4
	242- - 1
	242- - 2
	242- - 4
77710-89912	230- - 4
	233- - 2
	258- - 3
	258- - 3
	261- - 2
77710-89913	215- - 2
	245- - 2
77730-89900	255- - 1
77730-89912	212- - 4
	242- - 3
77740-89915	262- - 3
	262- - 3
77770-89913	212- - 2
	242- - 2
78100-E0130	226- - 1
78101-E0130	226- - 1
78111-E0430	252- - 2
78112-E0430	252- - 2
78125-E0100	226- - 1
78126-E0100	226- - 1
78140-E0400	255- - 1
78806-73000	264- - 1
78810-E0400	255- - 1
78813-E0450	255- - 1
79100-E0330	226- - 1
79116-E0100	226- - 1
79121-E0130	226- - 1
79400-E0130	226- - 1
79710-E0100	227- - 1
79713-E0100	227- - 1
79713-E0700	227- - 1
79810-E0100	227- - 1
79811-E0100	227- - 1
79812-E0100	227- - 1
79814-E0100	227- - 1
79816-E0100	227- - 1
79817-E0100	227- - 1
79821-E0101	226- - 1
79840-E0100	226- - 1
79841-E0100	226- - 1
79842-E0100	226- - 1
79843-E0100	226- - 1
79844-E0100	226- - 1
79845-E0100	226- - 1
79855-E0101	271- - 2
79855-E0301	271- - 2
79910-E0300	226- - 1
79910-E0301	226- - 1
79910-E0302	226- - 2
79910-E0303	226- - 2
79910-E3100	226- - 2
79910-E3101	226- - 2
79910-E3102	226- - 2
79910-E3103	226- - 2
79920-E0110	226- - 2
79924-E0110	226- - 2
79930-E0100	226- - 2
79935-E0101	226- - 2
79936-E0101	226- - 2

© 1972 NISSAN MOTOR CO., LTD.

REVISED: DECEMBER, 1972

PRINTED IN JAPAN

PART NUMBER INDEX

(CLASSIFIED BY PART NO.)

PART NO.	PAGE
80000	
80010-E0104	272- - 1
80010-E0105	272- - 1
80010-E0107	272- - 1
	272- - 1
80010-E0108	272- - 1
	272- - 2
80010-E0109	272- - 1
80010-E0110	272- - 1
80010-E0304	272- - 1
80010-E0305	272- - 1
80010-E0306	272- - 1
80010-E0307	272- - 1
80010-E0308	272- - 1
80010-E0309	272- - 1
80010-E0310	272- - 1
80010-E0311	272- - 1
80010-E0402	272- - 2
80010-E0403	272- - 2
80010-E0405	272- - 2
80010-E0406	272- - 2
80010-E0502	272- - 2
80010-E0503	272- - 2
80010-E0901	272- - 2
80010-E0902	272- - 2
80010-E3401	272- - 1
80010-E3403	272- - 2
80010-E3501	272- - 2
80010-E3502	272- - 2
80100-E0130	228- - 1
	256- - 1
80101-E0130	228- - 1
	256- - 1
80202-E0300	228- - 1
	256- - 1
80202-E3001	228- - 1
80202-E3200	228- - 1
	256- - 1
80203-E0300	228- - 1
	256- - 1
80203-E3001	228- - 1
80203-E3200	228- - 1
	256- - 1
80210-E0100	228- - 1
	256- - 1
80211-E0100	228- - 1
	256- - 1
80214-E0100	228- - 2
	256- - 2
80215-E0100	228- - 2
	256- - 2
80255-E0100	228- - 1
	256- - 1
80255-E0300	228- - 1
	256- - 1
80255-E3001	228- - 1
80255-E3200	228- - 1
	256- - 1
80256-E0100	228- - 1
	256- - 1
80256-E0300	228- - 1
	256- - 1
80256-E3001	228- - 2
80256-E3200	228- - 1
	256- - 1
80260-E3200	228- - 2
	256- - 1
80261-E3200	228- - 2
	256- - 1
80280-E0100	228- - 4
	256- - 4
80281-E0100	228- - 4
	256- - 4
80292-73000	234- - 4
80294-73000	228- - 2
	231- - 2
	256- - 1
	259- - 2
80298-73000	228- - 2
	231- - 2
	256- - 2
	259- - 2
	262- - 2
80302-E0100	228- - 2
	256- - 2
80303-E0100	228- - 2
	256- - 2
80304-E0100	228- - 3
	256- - 3
80305-E0100	228- - 3
	256- - 3
80306-E0100	228- - 3
	231- - 3
	256- - 3
	259- - 3
80311-E0100	228- - 3
	256- - 2
80311-E0300	228- - 3
	256- - 2
80312-E0100	228- - 3
	256- - 2
80312-E0300	228- - 3
	256- - 2
80317-E0199	228- - 4
	231- - 2
	256- - 4
	259- - 2
80317-00800	228- - 4
	256- - 4
	259- - 2
80335-E0100	228- - 2
	256- - 1
80336-E0100	228- - 3
	256- - 3
80337-E0100	228- - 3
	231- - 2
	256- - 3
	259- - 3
80400-73000	228- - 3
	256- - 3
80420-E0100	228- - 3
	256- - 3
80420-E3200	228- - 3
	231- - 3
	256- - 3
	259- - 3
80421-E0100	228- - 3
	256- - 3
80421-E3200	228- - 3
	231- - 4
	256- - 3
	259- - 4
80422-73001	228- - 3
	231- - 4
	256- - 3
	259- - 3
	259- - 4
80432-28501	228- - 4
	256- - 3
80502-E0101	229- - 1
	257- - 1
80503-E0101	229- - 1
	257- - 1
80504-E0100	229- - 1
	232- - 1
	257- - 1
	260- - 1

© 1972 NISSAN MOTOR CO., LTD.

REVISED: DECEMBER, 1972

PRINTED IN JAPAN

B-C

PART NUMBER INDEX

(CLASSIFIED BY PART NO.)

PART NO.	PAGE
80505-E0100	229- - 1
	232- - 1
	257- - 1
	260- - 1
80512-E0100	229- - 1
	232- - 1
	257- - 1
80512-E0101	229- - 1
	232- - 1
	257- - 1
	260- - 1
	260- - 1
80513-E0100	229- - 1
	232- - 1
	257- - 1
	260- - 1
80513-E0101	229- - 1
	232- - 1
	257- - 1
	260- - 1
80514-E0101	229- - 2
	232- - 2
	257- - 2
	260- - 2
80515-E0101	229- - 1
	232- - 1
	257- - 1
	260- - 1
80517-E0100	229- - 1
	232- - 1
	257- - 1
	260- - 1
80517-E0101	229- - 1
	232- - 1
	257- - 1
	260- - 1
80518-E0100	229- - 1
	232- - 1
	257- - 1
	260- - 1
80518-E0101	229- - 1
	232- - 1
	257- - 1
	260- - 1
80570-E0100	229- - 3
	232- - 3
	257- - 3
	260- - 2
80570-E0101	229- - 3
	232- - 3
80570-E0101	257- - 3
	260- - 3
80571-E0100	229- - 3
	232- - 3
	257- - 3
	260- - 3
80571-E0101	229- - 3
	232- - 3
	257- - 3
	260- - 3
80572-E0100	229- - 3
	232- - 3
	257- - 3
	260- - 3
80572-E0101	229- - 3
	232- - 3
	257- - 3
	260- - 3
80575-E0100	229- - 3
	232- - 3
	257- - 3
	260- - 3
80590-21000	255- - 1
	272- - 3
80595-N1600	229- - 2
	229- - 3
	232- - 2
	257- - 2
	257- - 3
	260- - 2
	260- - 3
	263- - 3
80595-N1601	229- - 2
	232- - 2
	232- - 3
	257- - 2
	260- - 2
	263- - 4
80595-N1602	229- - 2
	257- - 3
	260- - 2
	263- - 4
80595-18400	263- - 3
80595-18402	229- - 2
	232- - 2
	257- - 2
	260- - 2
	263- - 4
80595-18403	263- - 3
80595-21003	229- - 2
80595-21003	229- - 3
	232- - 2
	257- - 2
	257- - 3
	260- - 2
	260- - 3
	263- - 3
80595-21004	229- - 2
	232- - 2
	232- - 3
	257- - 2
	260- - 2
	263- - 4
80595-21005	229- - 2
	257- - 2
	260- - 2
	263- - 4
80595-73001	263- - 3
80595-73002	229- - 2
	232- - 2
	257- - 2
	260- - 2
	263- - 3
80595-73003	263- - 3
80595-78803	229- - 2
	232- - 2
	257- - 2
	260- - 2
	263- - 3
80595-78804	229- - 2
	232- - 2
	257- - 2
	260- - 2
	263- - 3
80595-78805	263- - 3
80599-E0100	229- - 1
	232- - 1
	232- - 1
	257- - 1
	260- - 1
80600-E0100	272- - 2
80600-E0101	272- - 2
80600-E0126	272- - 2
80601-E0100	272- - 2
80601-E0101	272- - 2
80601-E0126	272- - 2
80605-E0101	229- - 3
	257- - 3
	272- - 2
80606-E0101	229- - 3

© 1972 NISSAN MOTOR CO., LTD.

REVISED: DECEMBER, 1972

PRINTED IN JAPAN

PART NUMBER INDEX

PUB. NO. C-0020

(CLASSIFIED BY PART NO.)

PART NO.	PAGE
80606-E0101	257- - 3
	272- - 3
80700-E0100	229- - 4
	257- - 4
80701-E0100	229- - 5
	257- - 4
80710-E0100	229- - 5
	232- - 4
	257- - 5
	260- - 4
80750-E0101	229- - 4
	257- - 4
80751-E0101	229- - 4
	257- - 4
80751-E0102	229- - 4
	257- - 4
80752-E0101	229- - 4
	257- - 3
80756-E0101	229- - 4
	257- - 4
80757-E0100	229- - 4
	257- - 4
80760-E0100	229- - 4
	232- - 4
	257- - 4
	260- - 4
80763-E0101	229- - 4
	232- - 4
	257- - 4
	260- - 4
80764-E0100	229- - 4
	232- - 4
	257- - 4
	260- - 4
80798-E0111	260- - 5
80820-E0100	228- - 4
	256- - 3
80821-E0100	228- - 4
	256- - 3
80825-E0100	228- - 4
	231- - 1
	256- - 4
	259- - 1
80830-E0100	228- - 4
	256- - 4
80831-E0100	228- - 4
	256- - 4
80840-21000	228- - 4
	231- - 1
	256- - 4
80840-21001	231- - 1
	256- - 4
	259- - 1
80842-73000	228- - 4
	256- - 4
80860-E0100	228- - 4
	231- - 2
	256- - 4
	259- - 2
80865-E0100	228- - 4
	256- - 4
80900-E0100	230- - 1
80900-E0101	230- - 1
80900-E0102	230- - 1
80900-E0103	230- - 1
80900-E0200	230- - 1
	258- - 1
80900-E0201	230- - 1
	258- - 1
80900-E0202	230- - 1
	258- - 1
80900-E0203	230- - 1
	258- - 1
80900-E0204	230- - 1
	258- - 1
80900-E0300	230- - 2
	258- - 1
80900-E0301	230- - 2
	258- - 1
80900-E3000	230- - 1
	258- - 1
80900-E3001	230- - 1
	258- - 1
80900-E3002	230- - 1
	258- - 1
80900-E3003	258- - 1
80900-E3004	230- - 2
	258- - 1
80900-E3200	230- - 1
80900-E3201	230- - 1
80900-E3202	230- - 1
80900-E3203	230- - 1
80900-E3400	230- - 2
	258- - 1
80900-E3401	230- - 2
	258- - 1
80901-E0100	230- - 2
80901-E0101	230- - 2
80901-E0102	230- - 2
80901-E0103	230- - 2
80901-E0200	230- - 2
	258- - 1
80901-E0201	230- - 3
	258- - 2
80901-E0202	230- - 3
	258- - 2
80901-E0203	230- - 3
	258- - 2
80901-E0204	230- - 3
	258- - 2
80901-E0300	230- - 3
	258- - 2
80901-E0301	230- - 3
	258- - 2
80901-E3000	230- - 2
	258- - 2
80901-E3001	230- - 3
	258- - 2
80901-E3002	230- - 3
	258- - 2
80901-E3003	230- - 3
	258- - 2
80901-E3004	230- - 3
	258- - 2
80901-E3200	230- - 2
80901-E3201	230- - 2
80901-E3202	230- - 2
80901-E3203	230- - 2
80901-E3400	230- - 3
	258- - 2
80901-E3401	230- - 3
	258- - 2
80919-32200	219- - 2
	230- - 3
	233- - 2
	258- - 2
	261- - 1
	264- - 1
80919-89902	226- - 2
80919-89903	226- - 2
80919-89904	253- - 3
80929-32200	230- - 3
	233- - 2
	258- - 2
	261- - 1
80940-E0100	230- - 4
	258- - 3
80940-E0110	230- - 4
	233- - 2
	258- - 3

© 1972 NISSAN MOTOR CO., LTD.

REVISED: DECEMBER, 1972

PRINTED IN JAPAN

B-C

PART NUMBER INDEX

(CLASSIFIED BY PART NO.)

PART NO.	PAGE
80941-E0100	230- - 4
	258- - 3
80941-E0110	230- - 4
	233- - 2
	258- - 3
80945-E0100	230- - 4
	233- - 2
	258- - 3
	261- - 2
80945-E0110	230- - 4
	233- - 2
	258- - 3
80960-E0102	230- - 3
	258- - 2
80961-E0102	230- - 3
	258- - 3
80970-E0102	230- - 4
	233- - 2
	258- - 3
	261- - 1
80970-E0400	264- - 2
80970-69000	233- - 2
	261- - 1
80999-89900	224- - 2
	253- - 2
	253- - 3
	253- - 4
	253- - 5
	264- - 1
	264- - 2
	264- - 2
80999-89901	253- - 3
82100-E0130	231- - 1
82100-E0430	259- - 1
82101-E0130	231- - 1
82101-E0430	259- - 1
82152-E0130	231- - 1
82153-E0130	231- - 1
82202-E0100	231- - 1
82202-E0300	231- - 1
82202-E0400	259- - 1
82202-E0500	259- - 1
82203-E0100	231- - 1
82203-E0300	231- - 1
82203-E0400	259- - 1
82203-E0500	259- - 1
82210-E0100	231- - 1
82210-E0400	259- - 1
82211-E0100	231- - 1
82211-E0400	259- - 1
82214-E0100	231- - 2
	259- - 2
82215-E0100	231- - 2
	259- - 2
82255-E0100	231- - 1
82255-E0300	231- - 1
82255-E0400	259- - 1
82255-E0500	259- - 1
82256-E0100	231- - 1
82256-E0300	231- - 1
82256-E0400	259- - 1
82256-E0500	259- - 1
82280-E0100	231- - 2
82280-E0400	259- - 1
82281-E0100	231- - 2
82281-E0400	259- - 2
82302-E0100	181-A- 4
	231- - 3
	259- - 2
82303-E0100	231- - 3
	259- - 2
82304-E0100	231- - 3
	259- - 3
82305-E0100	231- - 3
	259- - 3
82311-E0100	231- - 3
82311-E0300	231- - 3
82311-E0400	259- - 3
82311-E0500	259- - 3
82312-E0100	231- - 3
82312-E0300	231- - 3
82312-E0400	259- - 3
82312-E0500	259- - 3
82335-E0100	231- - 3
82335-E0400	259- - 3
82338-E0100	231- - 1
82338-E0400	259- - 1
82400-73000	231- - 3
	259- - 3
82420-E0100	231- - 3
	259- - 3
82420-E3200	231- - 3
	259- - 3
82421-E0100	231- - 3
	259- - 3
82421-E3200	231- - 4
	259- - 3
82502-E0101	232- - 1
	260- - 1
82503-E0101	232- - 1
82503-E0101	260- - 1
82576-E0100	232- - 3
	260- - 3
82576-E0101	232- - 3
	260- - 3
82576-F0800	232- - 3
	260- - 3
82577-E0100	232- - 3
	260- - 3
82577-E0101	232- - 3
	260- - 3
82577-F0800	232- - 3
	260- - 3
82605-E0100	232- - 4
	260- - 3
82606-E0100	232- - 4
	260- - 3
82700-E0100	232- - 4
82700-E0110	260- - 4
82701-E0100	232- - 4
82701-E0110	260- - 4
82727-E0100	229- - 5
	232- - 5
	257- - 5
	260- - 4
82728-65000	229- - 5
	232- - 5
	257- - 5
	260- - 5
82750-E0400	262- - 3
82755-E0400	262- - 3
82760-E0400	262- - 3
82820-E0100	231- - 1
	259- - 1
82821-E0100	231- - 1
	259- - 1
82830-E0100	231- - 2
82830-E0400	259- - 1
82831-E0100	231- - 2
82831-E0400	259- - 1
82865-E0100	231- - 2
	259- - 2
82900-E0100	233- - 1
82900-F0101	233- - 1
82900-E0102	233- - 1
82900-E0103	233- - 1
82900-E0200	233- - 1
	261- - 1
82900-E0201	233- - 1

© 1972 NISSAN MOTOR CO., LTD.

REVISED: DECEMBER, 1972

PRINTED IN JAPAN

PART NUMBER INDEX

PUB. NO. C-0020

(CLASSIFIED BY PART NO.)

PART NO.	PAGE
82900-E0201	261- - 1
82900-E0202	233- - 1
	261- - 1
82900-E0203	233- - 1
	261- - 1
82900-E0204	233- - 1
	261- - 1
82900-E0300	233- - 1
	261- - 1
82900-E0301	233- - 1
	261- - 1
82901-E0100	233- - 1
82901-E0101	233- - 1
82901-E0102	233- - 1
82901-E0103	233- - 1
82901-E0200	233- - 1
	261- - 1
82901-E0201	233- - 1
	261- - 1
82901-E0202	233- - 1
	261- - 1
82901-E0203	233- - 2
	261- - 1
82901-E0204	233- - 2
	261- - 1
82901-E0300	233- - 2
	261- - 1
82901-E0301	233- - 2
	261- - 1
82940-E0100	233- - 2
	261- - 1
82941-E0100	233- - 2
	261- - 1
82960-E0102	233- - 2
	261- - 1
82961-E0102	233- - 2
	261- - 1
84300-E0730	234- - 1
84360-73200	255- - 1
	272- - 3
84420-73000	234- - 1
84430-E0100	234- - 1
84460-E0100	234- - 1
	272- - 3
84465-78000	234- - 1
84510-P0100	234- - 1
84510-69001	234- - 1
84518-69000	234- - 1
84518-73000	234- - 1
84521-69001	234- - 1
84532-69050	234- - 1
84533-69000	234- - 1
84535-73000	234- - 1
84541-P0100	234- - 1
84541-69000	234- - 1
84806-69000	234- - 2
84807-E0100	234- - 2
84810-E3001	271- - 2
84810-69001	271- - 2
84810-69002	271- - 2
84810-69100	271- - 2
	271- - 2
84810-69101	271- - 2
84810-69201	271- - 2
84820-E0100	271- - 3
84820-E3100	271- - 3
84820-E3101	271- - 3
84820-69300	271- - 2
	271- - 2
84820-69301	271- - 2
84820-69800	271- - 2
84820-69801	271- - 3
84831-E0100	234- - 2
84832-E0100	234- - 2
84902-E0200	234- - 2
	234- - 2
84902-E0601	234- - 2
84902-E0900	234- - 2
84902-E3000	234- - 2
84911-E0100	234- - 3
84912-E0100	234- - 3
84913-E0100	234- - 3
84921-E0100	234- - 3
84921-E0300	234- - 3
84941-E0101	234- - 2
84941-E3200	234- - 2
84942-E0101	234- - 2
84942-E3200	234- - 2
84946-E0101	234- - 2
84947-E0101	234- - 2
84950-E3200	234- - 2
84950-69000	234- - 2
84952-E3200	234- - 2
	234- - 2
84952-69000	234- - 2
84953-69000	234- - 2
85001-E0400	255- - 1
85011-E0101	234- - 3
85210-E0101	234- - 3
85211-E0101	234- - 3
85211-E0400	255- - 1
85212-E0400	255- - 1
85214-E0400	255- - 1
86000-E0200	235- - 1
86000-E0201	235- - 1
86000-E0203	235- - 1
86000-E0300	235-A- 1
86000-E0301	235-A- 1
86000-E0302	235-A- 1
86000-E0303	235-A- 1
86000-E0400	265- - 1
86000-E0401	265- - 1
86000-E0500	265- - 1
86000-E0900	235-B- 1
86000-E0901	235-B- 1
86000-E1200	235- - 1
86000-E1201	235- - 1
86000-E1203	235- - 1
86000-E1300	235-A- 1
86000-E1301	235-A- 1
86000-E1302	235-A- 1
86000-E1303	235-A- 1
86000-E1400	265- - 1
86000-E1401	265- - 1
86000-E1500	265- - 1
86000-E1900	235-B- 1
86000-E1901	235-B- 1
86000-E3100	235- - 1
86000-E3101	235- - 1
86000-E3102	235- - 1
86000-E3103	235- - 1
86000-E3300	235- - 1
86000-E3301	235- - 1
86000-E3302	235- - 1
86000-E3303	235- - 1
86300-E3100	235- - 1
86300-E3101	235- - 2
86300-E3102	235- - 2
86300-E3103	235- - 2
86320-E0200	235- - 2
86320-E0201	235- - 2
86320-E0203	235- - 2
86320-E0300	235-A- 1
86320-E0301	235-A- 1
86320-E0302	235-A- 1
86320-E0303	235-A- 1
86320-E0400	265- - 1
86320-E0401	265- - 1
86320-E0500	265- - 1
86320-E0900	235-B- 1

B-C

PRINTED IN JAPAN

© 1972 NISSAN MOTOR CO., LTD.

REVISED: DECEMBER, 1972

PART NUMBER INDEX

PUB. NO. C-0020

(CLASSIFIED BY PART NO.)

PART NO.	PAGE
86320-E0901	235-B- 1
86320-E3100	235- - 2
86320-E3101	235- - 2
86320-E3102	235- - 3
86320-E3103	235- - 3
86370-E3100	235- - 3
86370-E3101	235- - 3
86370-E3102	235- - 3
86370-E3103	235- - 3
86400-E0101	239- - 1
	268- - 1
86400-E4900	239- - 1
	268- - 1
86490-E0100	239- - 1
	239- - 1
	239- - 1
86491-E0100	239- - 1
86492-E0100	239- - 1
86493-E0100	239- - 1
86501-E0100	235- - 4
	235-A- 2
	235-B- 1
86501-E0400	265- - 1
86501-E1100	235- - 4
	235-A- 2
	235-B- 1
86501-E1400	265- - 1
86502-E0100	235- - 4
	235-A- 2
	235-B- 1
86502-E0400	265- - 1
86502-E1100	235- - 4
	235-A- 2
	235-B- 1
86502-E1400	265- - 1
86532-69600	265- - 1
86532-73001	235- - 4
	235-A- 2
	235-B- 1
86620-E0200	235- - 3
86620-E0201	235- - 3
86620-E0203	235- - 3
86620-E0300	235-A- 1
86620-E0301	235-A- 1
86620-E0302	235-A- 1
86620-E0303	235-A- 2
86620-E0400	265- - 1
86620-E0401	265- - 1
86620-E0500	265- - 1
86620-E0900	235-B- 1
86620-E0901	235-B- 1
86700-E0201	235- - 5
86700-E0600	235- - 5
86700-E0603	235- - 5
86715-E0600	235- - 6
86715-E0601	235- - 6
86715-E0602	235- - 6
86715-E0603	235- - 6
86720-E0600	235- - 5
86720-E0601	235- - 5
86720-E0602	235- - 5
86720-E0603	235- - 5
86810-A4400	239- - 2
	239- - 2
	268- - 1
	268- - 2
86810-E4900	239- - 2
	239- - 2
	268- - 2
86810-21004	239- - 2
	239- - 2
	268- - 1
	268- - 2
86811-79000	239- - 3
	268- - 2
86812-79000	239- - 3
	268- - 2
86820-E0100	239- - 1
	268- - 1
86820-E0105	239- - 2
	268- - 1
86820-E4900	239- - 2
	268- - 1
86830-E0100	239- - 1
	268- - 1
86830-E0105	239- - 1
	268- - 1
86830-E4900	239- - 2
	268- - 1
86981-A0600	235- - 4
	235-A- 2
	235-B- 2
	236- - 5
	236-A- 2
	265- - 2
86981-A0601	235- - 4
	235-A- 2
	235-B- 2
	236- - 5
	236-A- 2
86981-A0601	265- - 2
86981-A0602	235- - 4
	235-A- 2
	235-B- 2
	236- - 5
	236-A- 2
	265- - 2
86981-A0604	235- - 4
	235-A- 2
	235-B- 2
	236- - 6
	236-A- 2
	265- - 2
86982-A0600	235- - 4
	235-A- 2
	235-B- 1
	236- - 6
	236- - 6
	236-A- 2
	265- - 2
86983-A0600	235- - 5
	235-A- 2
	235-B- 2
	236-A- 2
	265- - 2
87000-E1220	236- - 1
87000-E1221	236- - 1
87000-E1222	236- - 1
87000-E1223	236- - 1
87000-E1325	236-A- 1
87000-E1326	236-A- 1
87000-E3100	236- - 1
87000-E3101	236- - 1
87000-E3102	236- - 1
87000-E3103	236- - 1
87050-E1220	236- - 1
87050-E1221	236- - 1
87050-E1222	236- - 1
87050-E1223	236- - 1
87050-E1325	236-A- 1
87050-E1326	236-A- 1
87050-E3100	236- - 1
87050-E3101	236- - 1
87050-E3102	236- - 1
87050-E3103	236- - 1
87300-E0220	236- - 1
87300-E0221	236- - 2
87300-E0222	236- - 2
87300-E0223	236- - 2
87300-E0720	236-A- 1

© 1972 NISSAN MOTOR CO., LTD.

REVISED: DECEMBER, 1972

PRINTED IN JAPAN

PART NUMBER INDEX

PUB. NO. C-0020

(CLASSIFIED BY PART NO.)

PART NO.	PAGE
87300-E0721	236-A- 1
87300-E3100	236- - 2
87300-E3101	236- - 2
87300-E3102	236- - 2
87300-E3103	236- - 2
87320-E0220	236- - 2
87320-E0221	236- - 2
87320-E0222	236- - 2
87320-E0223	236- - 2
87320-E0720	236-A- 1
87320-E0721	236-A- 1
87320-E3100	236- - 2
87320-E3101	236- - 2
87320-E3102	236- - 2
87320-E3103	236- - 2
87350-E0220	236- - 3
87350-E0221	236- - 3
87350-E0222	236- - 3
87350-E0223	236- - 3
87350-E0720	236-A- 1
87350-E0721	236-A- 1
87350-E3100	236- - 3
87350-E3101	236- - 3
87350-E3102	236- - 3
87350-E3103	236- - 3
87370-E0220	236- - 3
87370-E0221	236- - 3
87370-E0222	236- - 3
87370-E0223	236- - 3
87370-E0720	236-A- 1
87370-E0721	236-A- 1
87370-E3100	236- - 3
87370-E3101	236- - 3
87370-E3102	236- - 3
87370-E3103	236- - 4
87401-E0100	235- - 4
87401-E0120	236- - 5
	236-A- 1
87402-E0100	235- - 4
87402-E0120	236- - 5
	236-A- 2
87406-73400	235- - 4
87451-E0100	235- - 4
87451-E0120	236- - 5
	236-A- 2
87452-E0100	235- - 4
87452-E0120	236- - 5
	236-A- 2
87501-78100	236- - 5
	236-A- 2
87501-78100	236-A- 2
87502-78100	236- - 5
87600-E0220	236- - 4
87600-E0221	236- - 4
87600-E0222	236- - 4
87600-E0223	236- - 4
87600-E0720	236-A- 1
87600-E0721	236-A- 1
87600-E3100	235- - 2
87600-E3101	235- - 2
87600-E3102	235- - 2
87600-E3103	235- - 2
87600-E3120	236- - 4
87600-E3121	236- - 4
87600-E3122	236- - 4
87600-E3123	236- - 4
87620-E0220	236- - 4
87620-E0221	236- - 4
87620-E0222	236- - 4
87620-E0223	236- - 4
87620-E0720	236-A- 1
87620-E0721	236-A- 1
87620-E3100	235- - 3
87620-E3101	235- - 3
87620-E3102	235- - 3
87620-E3103	235- - 3
87620-E3120	236- - 4
87620-E3121	236- - 4
87620-E3122	236- - 5
87620-E3123	236- - 5
87650-E3100	235- - 2
87650-E3101	235- - 2
87650-E3102	235- - 2
87650-E3103	235- - 2
87670-E3100	235- - 3
87670-E3101	235- - 3
87670-E3102	235- - 4
87670-E3103	235- - 4
88111-E0440	266- - 1
88111-78020	266- - 1
88112-E0440	266- - 1
88112-78020	266- - 1
88115-73200	266- - 1
88121-73201	266- - 2
88122-E0400	266- - 2
88131-73200	266- - 2
88132-73200	266- - 2
88139-73200	266- - 2
88200-E0400	266- - 1
88200-E0401	266- - 1
88200-E0500	266- - 1
88300-E0200	238- - 1
88300-E0201	238- - 1
88300-E0203	238- - 1
88300-E0300	238-A- 1
88300-F0301	238-A- 1
88300-E0302	238-A- 1
88300-E0303	238-A- 1
88300-E0700	238-B- 1
88300-E0701	238-B- 1
88300-E3100	238- - 1
88300-E3101	238- - 1
88300-E3102	238- - 1
88300-E3103	238- - 1
88320-E0200	238- - 1
88320-E0201	238- - 1
88320-E0203	238- - 1
88320-E0300	238-A- 1
88320-E0301	238-A- 1
88320-E0302	238-A- 1
88320-E0303	238-A- 1
88320-E0400	266- - 1
88320-E0401	266- - 1
88320-E0500	266- - 1
88320-E0700	238-B- 1
88320-E0701	238-B- 1
88320-E3100	238- - 1
88320-E3101	238- - 1
88320-E3102	238- - 1
88320-E3103	238- - 2
88400-E0101	239- - 1
88400-E0601	239- - 1
88500-E0400	266- - 1
88500-E0401	266- - 1
88500-E0500	266- - 1
88600-E0200	238- - 1
88600-E0201	238- - 1
88600-E0203	238- - 1
88600-E0300	238-A- 1
88600-E0301	238-A- 1
88600-E0302	238-A- 1
88600-E0303	238-A- 1
88600-E0700	238-B- 1
88600-E0701	238-B- 1
88600-E3100	238- - 1
88600-E3101	238- - 1
88600-E3102	238- - 1
88600-E3103	238- - 1
88620-E0200	238- - 2
88620-E0201	238- - 2

© 1972 NISSAN MOTOR CO., LTD.

REVISED: DECEMBER, 1972

PRINTED IN JAPAN

PART NUMBER INDEX

(CLASSIFIED BY PART NO.)

PUB. NO. C-0020

PART NO.	PAGE
88620-E0203	238- - 2
88620-E0300	238-A- 1
88620-E0301	238-A- 1
88620-E0302	238-A- 1
88620-E0303	238-A- 2
88620-E0400	266- - 1
88620-E0401	266- - 1
88620-E0500	266- - 1
88620-E0700	238-B- 1
88620-E0701	238-B- 1
88620-E3100	238- - 2
88620-E3101	238- - 2
88620-E3102	238- - 2
88620-E3103	238- - 2
88700-E0600	238- - 2
88700-E0601	238- - 2
88700-E0603	238- - 2
88716-E0600	235- - 6
88716-E0601	235- - 6
88716-E0602	235- - 6
88716-E0603	235- - 6
88720-E0600	238- - 2
88720-E0601	238- - 2
88720-E0603	238- - 2
88820-E0100	239- - 2
88820-E0105	239- - 2
88820-E0110	239- - 3
88820-E0115	239- - 3
88820-E0400	268- - 2
88820-E0405	268- - 2
88820-E4900	239- - 2
88820-E4904	268- - 2
88820-E4910	239- - 3
	268- - 2
88830-E0100	239- - 2
88830-E0105	239- - 2
88830-E0400	268- - 1
88830-E0405	268- - 1
88830-E4900	239- - 2
88830-E4904	268- - 1
88841-09100	266- - 1
88841-09101	267- - 1
89122-73300	267- - 1
89125-73300	267- - 1
89126-73300	267- - 1
89131-73300	267- - 1
89132-73300	267- - 1
89200-E0500	267- - 1
89320-E0500	267- - 1
89500-E0500	267- - 1
89620-E0500	267- - 1
89820-E0500	268- - 2
	268- - 2
89820-E0505	268- - 2
	268- - 2
89820-E4905	268- - 2

90000

PART NO.	PAGE
90100-E0431	263- - 1
90210-E0400	263- - 1
90313-E0500	263- - 1
90313-E1400	263- - 1
90320-E0400	263- - 1
90330-E0400	263- - 1
90333-E0400	263- - 1
90410-E0400	263- - 1
90411-E0400	263- - 1
90420-E0401	263- - 1
90421-E0401	263- - 1
90502-E0401	263- - 2
90502-E0402	263- - 2
90504-E0500	263- - 2
90505-E0400	263- - 2
90512-E0400	263- - 2
90515-E0400	263- - 2
90526-22900	263- - 1
90570-E0400	263- - 2
	263- - 2
90573-E0400	263- - 2
90575-E0400	263- - 2
90580-68400	263- - 1
90590-68400	264- - 1
90600-E0400	263- - 2
	272- - 3
90601-E0400	263- - 2
90602-E0400	263- - 2
90603-E0400	263- - 2
90604-E0400	263- - 2
90610-E0401	263- - 3
90802-E0500	271- - 3
90810-E1400	264- - 1
90810-E1500	264- - 1
90815-E0402	264- - 1
90816-E0400	264- - 1
90816-E0402	263- - 1
	264- - 1
90900-E0400	264- - 1
90900-E0401	264- - 1
90900-E0500	264- - 1
90900-E0501	264- - 1
90921-E0500	264- - 3
90922-E0500	264- - 3
90940-E0401	264- - 1
90948-E0400	264- - 2

© 1972 NISSAN MOTOR CO., LTD.

REVISED: DECEMBER, 1972

PRINTED IN JAPAN

B-C

PART NUMBER INDEX

PUB. NO. C-0020

(CLASSIFIED BY PART NO.)

PART NO.	PAGE
90950-E0501	264- - 2
90980-E0500	264- - 2
90981-E0500	264- - 2
90982-E0500	264- - 2
90983-E0500	264- - 2
90984-E0500	264- - 2
90985-E0500	264- - 2
90985-E0501	264- - 2
90986-E0501	264- - 2
91009-90000	103- - 3
96200-E0150	234- - 3
96211-73001	264- - 1
96215-73000	234- - 3
96301-E0100	213- - 4
	243- - 4
96301-10800	213- - 4
	219- - 2
	243- - 4
	249- - 2
96302-E0100	213- - 4
	243- - 4
96321-E0200	219- - 2
	249- - 3
96321-E0300	219- - 2
	249- - 3
	249- - 3
96321-E3000	219- - 2
	249- - 3
96322-E0101	219- - 2
	249- - 3
96322-E0300	219- - 3
	249- - 3
96322-E3200	219- - 2
	249- - 3
96322-E3202	219- - 3
	249- - 3
96325-E0200	219- - 3
	249- - 3
	249- - 3
96400-E0101	249- - 2
96400-E0102	219- - 2
	249- - 2
96401-E0101	249- - 2
96401-E0102	219- - 2
	249- - 2
96409-E0100	219- - 2
	249- - 2
96501-21001	235-A- 2
	235-B- 1
96502-18001	253- - 5
96506-E0200	235- - 5
96506-E0210	235- - 5
96506-E0600	235- - 5
96506-E3100	235- - 5
96507-E3100	235- - 5
96508-E0200	235- - 5
96706-B0700	234- - 3
	264- - 2
96706-89900	224- - 2
	253- - 2
96800-E0100	216- - 2
	246- - 2
96800-E1200	216-A- 2
	246-A- 2
96815-B0700	212- - 2
	213- - 2
	242- - 2
	243- - 2
96901-69800	277- - 1
96901-69801	277- - 1
96901-69802	277- - 1
96901-69803	277- - 1
96910-E0110	237- - 1
96910-E0111	237- - 1
96910-E0112	237- - 1
96910-E0113	237- - 1
96910-E0300	237- - 1
96910-E0301	237- - 1
96910-E0302	237- - 1
96910-E0303	237- - 1
96915-E0110	237- - 1
96915-E0111	237- - 1
96915-E0112	237- - 1
96915-E0113	237- - 1
96918-E0100	237- - 1
96930-E0100	237- - 1
96940-E0250	237- - 2
96940-E0300	237- - 2
99500-E0101	274- - 1
99500-E0201	274- - 1
99500-E0901	274- - 1
99500-69600	274- - 1
99505-E0100	274- - 1
99512-78100	274- - 1
99520-73000	274- - 1
99525-73000	274- - 1
99530-73000	274- - 1
99535-73000	274- - 1
99540-73400	274- - 1
99545-73000	274- - 1
99550-E0100	274- - 1
99550-69600	274- - 1
99551-73200	274- - 1
99553-73200	274- - 1
99554-69600	274- - 1
99558-73000	274- - 1
99595-73000	274- - 1
99608-78000	274- - 1

© 1972 NISSAN MOTOR CO., LTD.

REVISED: DECEMBER, 1972

PRINTED IN JAPAN

B-C

ALPHABETICAL INDEX

ALPHABETICAL INDEX

PART NAME	GROUP NO.
A	
ACCELERATOR	134
Air CLEANER–H20–	90
Air CLEANER–J20–	71
Air CLEANER–L20(A)–	50
Air CLEANER–L23–	31
Air CLEANER–L24–	10
Air CLEANER–SD22–	110
Air VENTILATOR–SEDAN–	215
Air VENTILATOR–W & V–	248
ALTENATOR–12V/300W–	123A
ALTERNATOR–SD22 12V/500W–	123C
ALTERNATOR–12V/500W–	123B
AMMETER	143,143A
ANTENNA	147
ARMREST front door–SEDAN–	230
ARMREST front door–W & V–	258
ARMREST rear door–SEDAN–	233
ARMREST rear door–W & V–	261
ARM steering gear	203
ASH TRAY instrument–SEDAN–	216
ASH TRAY instrument–W & V–	246
ASH TRAY rear seat–SEDAN–	235B
ASH TRAY rear seat–W & V–	265
Assist STRAP–SEDAN–	219
Assist STRAP–W & V–	249
AUTOMATIC TIMER–SD22–	118
AXLE front–Dis brake type–	181
AXLE front–Drum brake type–	181A
AXLE rear	183
B	
Back MIRROR inside	213
BAR torsion tail gate hinge	263
BAR torsion trunk lid hinge	234
BATTERY	148
Battery TRAY–SEDAN–	213
Battery TRAY–W & V–	243
BELT safty–SEDAN–	239
BELT safty–W & V–	268
BLADE fan front–H20–	93
BLADE fan rear–H20–	93
Blank KEY	273
BLOCK cylinder–H20–	83
BLOCK cylinder–J20–	64
BLOCK cylinder–L20(A)–	43
BLOCK cylinder–L23–	23
BLOCK cylinder–L24–	3
BLOCK cylinder–SD22–	103
BLOCK fuse	142
BOARD splash	254
BOARD splash shield	254
BODY assembly–SEDAN–	211
BODY assembly–W & V–	241
Body HARNESS	141
Body side FITTING–SEDAN–	225
Body side FITTIN–W & V–	254
Body side PANEL–SEDAN–	223
Body side PANEL–W & V–	252
Body side TRIMMING–SEDAN–	224
Body side TRIMMING–W & V–	253
Body side WELT–SEDAN–	224
Body side WELT–W & V–	253
BOX console	237
BOX glove	247
BRACKET splash board	254
BRAKE front–Disc type–	192
BRAKE front–Drum type–	192B
Brake master CYLINDER–single–	196
Brake master CYLINDER–tandem–	196B
Brake master CYLINDER–tandem option–	196C
Brake PEDAL	195
Brake PIPING	194
BRAKE rear	193,193A,193B,193C,193D
BUMPER front–SEDAN–	212
BUMPER front–W & V–	242
BUMPER rear–SEDAN	234
BUMPER rear–W & V–	255
C	
CABLE engine room harness	141
CABLE high tension–H20–	122C
CABLE high tension–J20–	121B
CABLE high tension–L23–	121A
CABLE high tension–L24 & L20(A)–	121
CABLE room lamp	141
CABLE second ventilator–SEDAN–	215
CABLE second ventilator–W & V–	245
CABLE stop lamp	141
CAMSHAFT–H20–	86
CAMSHAFT–J20–	67
CAMSHAFT–L20(A)–	46
CAMSHAFT–L23–	27
CAMSHAFT–L24–	6
CAMSHAFT–SD22–	107
CARBURETOR–H20–	89
CARBURETOR–J20–	70
CARBURETOR–L20(A)–	49
CARBURETOR–L23–	30
CARBURETOR–L24–	9

B–C

REVISED: DECEMBER, 1972

© 1972 NISSAN MOTOR CO., LTD.

Printed in Japan.

PART NAME	GROUP NO.
Car COOLER dash type–L24,L20A DIESEL KIKI–	145C
Car COOLER front –H20–	145B
Car COOLER front–J20–	145A
Car COOLER front–L23–	145
Car COOLER rear–H20–	146B
Car COOLER rear–J20–	146A
Car COOLER rear–L23–	146
CARPET	222
CARRIER gear	180
CASE transmission–AUTOMATIC–	172
CASE transmission–R3W71A–	165
CASE transmission–R4W71A–	168
Center PILLAR–SEDAN–	223
Center PILLAR–W & V–	252
Center pillar GARNISH–SEDAN–	223
Center pillar GARNISH–W & V–	252
Cigarette LIGHTER	142
CLEANER air–H20–	90
CLEANER air–J20–	71
CLEANER air–L20(A)–	50
CLEANER air–L23–	31
CLEANER air–L24–	10
CLEANER air–SD22–	110
CLOCK	143
CLOTH head lining	219
CLUTCH	161
Clutch master CYLINDER–NABCO–	163
Clutch master CYLINDER–NABCO–	163B
Clutch master CYLINDER–TOKICO–	163A
Clutch master CYLINDER–TOKICO–	163C
Clutch master CYLINDER–TOKICO–	163D
Clutch operatingCYLINDER	162
Clutch PEDAL	195
COIL ignition–H20–	121C
COIL ignition–J20–	121B
COIL ignition–L23–	121A
COIL ignition–L24&L20(A)–	121

PART NAME	GROUP NO.
Combined INSTRUMENT	143, 143A
Connecting ROD–H20–	85
Connecting ROD–J20–	66
Connecting ROD–L20(A)–	45
Connecting ROD–L23–	26
Connecting ROD–L24–	5
Connecting ROD–SD22–	106
Console BOX	237
CONTROL hood lock–SEDAN–	214
CONTROL hood lock–W & V–	244
CONTROL transmission–AUTOMATIC LD–	178A
CONTROL transmission–AUTOMATIC RD–	178
CONTROL transmission–R3W71A LD–	176A
CONTROL transmission–R3W71A RD–	176
CONTROL transmission–R4W71A LD–	177A
CONTROL transmission–R4W71A RD–	177
COOLANT nissan long life	275
COOLER car–H20–	145B
COOLER car–J20–	145A
COOLER car–L23,L24 & L20(A)–	145
Corner GARNISH rear	219
COVER glove box–SEDAN–	217
COVER glove box–W & V–	247
COVER rear wheel house	253
COVER rocker–H20–	84
COVER rocker–J20–	65
COVER rocker–L20(A)–	44
COVER rocker–L23–	25
COVER rocker–L24–	4
COVER rocker–SD22–	105
Cowl PANEL–SEDAN–	215
Cowl PANEL–W & V–	245
Cowl top GRILLE–SEDAN–	215
Cowl top GRILLE–W & V–	245
Cowl TOP–SEDAN–	215
Cowl TOP –W & V–	245
Cowl top RUBBER–SEDAN–	215
Cowl top RUBBER–W & V–	245

PART NAME	GROUP NO.
Cross MEMBER–SEDAN–	220
Cross MEMBER–W & V–	250
Cylinder BLOCK–H20–	83
Cylinder BLOCK–J20–	83
Cylinder BLOCK–L20(A)–	43
Cylinder BLOCK–L23–	64
Cylinder BLOCK–L24–	3
Cylinder BLOCK–SD22–	103
CYLINDER brake master–single–	196, 196A
CYLINDER brake master–tandem–	196B, 196C
CYLINDER brake master –tendem option–	196D,196E
CYLINDER clutch master–NABCO–	163
CYLINDER clutch master–NABCO–	163B
CYLINDER clutch master–TOKICO–	163A
CYLINDER clutch master–TOKICO–	163C
CYLINDER clutch master	162
CYLINDER clutch operating	162
Cylinder HEAD–H20–	84
Cylinder HEAD–J20–	65
Cylinder HEAD–L20(A)–	44
Cylinder HEAD–L23–	25
Cylinder HEAD–L24–	4
Cylinder HEAD–SD22–	105
Cylinder LOCK	272
Cylinder LOCK & KEY	272

D

DASH insulator–SEDAN–	217
DASH insulator–W & V–	247
Dash PANEL–SEDAN–	216
Dash PANEL–W & V–	246
Dash side FINISH–SEDAN–	215

B–C

© 1972 NISSAN MOTOR CO., LTD.

Printed in Japan.

REVISED: DECEMBER, 1972

PART NAME	GROUP NO.
Dash side FINISH–W & V–	245
DISTRIBUTOR–H20–	121C
DISTRIBUTOR–J20–	121B
DISTRIBUTOR–L23–	121A
DISTRIBUTOR–L24&L20(A)–	121
Distributor SUPPORT–H20–	121C
Distributor SUPPORT–J20–	121B
Distributor SUPPORT–L23–	121A
Distributor SUPPORT–L24 & L20(A)–	121
Door GLASS front–SEDAN–	228
Door GLASS front–W & V–	256
Door GLASS rear–SEDAN–	231
Door GLASS rear–W & V–	259
Door HANDLE front–SEDAN–	229
Door HANDLE front–W & V–	257
Door HANDLE rear–SEDAN–	232
Door HANDLE rear–W & V–	260
Door HINGE front–SEDAN–	228
Door HINGE front–W & V–	256
Door LOCK front–SEDAN–	229
Door LOCK front–W & V–	257
Door lock KNOB front–SEDAN–	229
Door lock KNOB front–W & V–	257
Door lock KNOB rear–SEDAN–	232
Door lock KNOB rear–W & V–	260
Door LOCK rear–SEDAN	232
Door LOCK rear–W & V–	260
Door MIRROR–SEDAN–	213
Door MIRROR–W & V–	243
Door PANEL front–SEDAN–	228
Door PANEL front–W & V–	256
Door PANEL rear–SEDAN–	231
Door PANEL–W & V–	259
Door SASH front–SEDAN–	228
Door SASH front–W & V–	256
Door SASH rear–SEDAN–	231
Door SASH rear–W & V–	259
Door SWITCH	142
DRIVER	274
DRUM rear	183
DUCT second ventilator–SEDAN–	215
DUCT second ventilator–W & V–	245
E	
EMBLEM–CEDRIC–	271
EMBLEM–DATSUN–	271
EMBLEM–DATSUN 2000–	271
EMBLEM–DATSUN 2300–	271
EMBLEM–DATSUN 24000–	271
ENGINE assembly–H20–	81
ENGINE assembly–J20–	61
ENGINE assembly–L20(A)–	41
ENGINE assembly–L23–	21
ENGINE assembly–L24–	1
ENGINE assembly–SD22–	101
Engine MOUNTING	136
Exhaust MANIFOLD–H20–	87
Exhaust MANIFOLD–J20–	68
Exhaust MANIFOLD–L20(A)–	47
Exhaust MANIFOLD–L23–	28
Exhaust MANIFOLD–L24–	7
Exhaust MANIFOLD–SD22–	108
Exhaust PIPE–SEDAN–	131
Exhaust PIPE–W & V–	131A
F	
FAN–J20–	74
FAN–L20(A)–	53
FAN–SD22–	119
Fan BLADE front–H20–	93
Fan BLADE rear–H20–	93
FAN spider–L23–	34
FAN spider–L24–	13
Feed PUMP–SD22–	116
FELT floor–SEDAN–	222
FELT floor–W & V–	251A
FENDER front–SEDAN–	213
FENDER front–W & V–	243
FENDER rear–SEDAN–	226
FENDER rear–W & V–	255
FILTER fuel–SD22–	113
FILTER oil–H20–	83
FILTER oil–J20–	64
FILTER oil–L20(A)–	43
FILTER oil–L23–	23
FILTER oil–L24–	3
FILTER oil–SD22–	111
FINISH dash side–SEDAN–	215
FINISH dash side–W & V–	245
FINISH front door–SEDAN–	230
FINISH front door–W & V–	258
FINISH rear door–SEDAN–	233
FINISH rear door–W & V–	261
FINISH rear side	253
FINISHER tail gate	264
FITTING body side–SEDAN–	225
FITTING body side–W & V–	254
Flasher UNIT	142
Floor PANEL–SEDAN–	220
Floor PANEL–W & V–	250
FLYWHEEL–H20–	85
FLYWHEEL–J20–	66
FLYWHEEL–L20(A)–	45
FLYWHEEL–L23–	26

B–C

© 1972 NISSAN MOTOR CO., LTD.

Printed in Japan.

PART NAME	GROUP NO.
FLYWHEEL–L24–	5
FLYWHEEL–SD22–	106
Front AXLE–Disc brake type–	181
Front AXLE–Drum brake–	181A
Front BRAKE–Disc type–	192
Front BRAKE–Drum type–	192A
Front BUMPER–SEDAN–	212
Front BUMPER–W & V–	242
Front door ARMREST–SEDAN–	230
Front door ARMREST–W & V–	258
Front door GLASS–SEDAN–	228
Front door GLASS–W & V–	256
Front door HINGE–SEDAN–	228
Front door HINGE–W & V–	256
Front door lock KNOB–SEDAN–	232
Front door lock KNOB–W & V–	260
Front door LOCK–SEDAN–	229
Front door LOCK–W & V–	257
Front door PANEL–SEDAN–	228
Front door PANEL–W & V–	256
Front door SASH–SEDAN–	228
Front door SASH–W & V–	256
Front FENDER–SEDAN–	213
Front FENDER–W & V–	243
Front HUB	181A
Front PILLAR–SEDAN	223
Front PILLAR–W & V–	252
Front SEAT–Bench type for –STD–	235B
Front SEAT–Separate type for DX–	236
Front SEAT–Separate type for STD–	236A
Front SEAT–Semi separate type–	235B
Front side MEMBER–SEDAN–	220
Front side MEMBER–W & V–	251
Front SPRING	182
Front SUSPENSION	182
Front suspension LINK	182
Front suspension MEMBER	182
Fuel FILTER–SD22–	113
Fuel PIPING–DIESEL–	133A
Fuel PIPING–GASOLING–	133
Fuel PUMP–H20–	92A
Fuel PUMP–J20–	73
Fuel PUMP–L20(A)–	52
Fuel PUMP–L23–	33
Fuel PUMP–L24–	12
Fuel PUMP electric–H20–	92A
Fuel PUMP electric–J20–	73A
Fuel PUMP electric –L23–	33A
Fuel STRAINER–H20–	91
Fuel STRAINER–J20–	72
Fuel STRAINER–L20(A)	51
Fuel STRAINER–L23–	32
Fuel STRAINER–L24–	11
Fuel TANK–SEDAN–	132
Fuel TANK–W & V–	132A
FUSE	142
Fuse BLOCK	142
G	
GARNISH center pillar–SEDAN–	224
GARNISH center pillar–W & V–	253
GARNISH instrument	217
GARNISH rear corner	219
GARNISH rear pillar	253
GARNISH rear wheel house –SEDAN–	223
GARNISH rear wheel house –W & V–	253
GARNISH tail gate	253
GASKET KIT regrined–H20–	82
GASKET KIT regrined–J20–	62
GASKET KIT regrined–L20(A)–	42
GASKET KIT regrined–L23–	22
GASKET KIT regrined–L24–	2
GASKET KIT regrined–SD22–	102
GASKET KIT repair–H20–	82
GASKET KIT repair–J20–	62
GASKET KIT repair–L20(A)–	42
GASKET KIT repair –L23–	22
GASKET KIT repair–L24–	2
GASKET KIT repair–SD22–	102
GATE tail	263
GAUGE fuel	143
GAUGE temperature	143
Gear CARRIER	180
GEAR steering	201
GEAR steering–Collapsible type–	202
GEARS transmission–AUTOMATIC–	174
GEARS transmission–R3W71A–	166
GEARS transmission–R4W71A–	169
GLASS front door–SEDAN–	228
GLASS front door–W & V–	257
GLASS rear door–SEDAN–	231
GLASS rear door–W & V–	259
GLASS tail gate window	263
GLASS windshield–SEDAN–	218
GLASS windshield–W & V–	248
Glove box COVER–SEDAN–	217
Glove box COVER–W & V–	247
Glove box LID–SEDAN–	217
Glovebox LID–W & V–	247
Glove box lid LOCK –SEDAN–	217
Glove box lid LOCK –W & V–	247
GOVERNOR pneumatic–SD22–	117
GRILLE cowl top–SEDAN–	215
GRILLE cowl top–W & V–	245
GRILLE RADIATOR–SEDAN–	212
GRILLE radiator–W & V–	242

B–C

© 1972 NISSAN MOTOR CO., LTD.

REVISED: DECEMBER, 1972

PART NAME	GROUP NO.
H	
Hand BRAKE	191
HANDLE front door–SEDAN–	229
HANDLE front door–W & V–	257
HANDLE rear door–SEDAN–	232
HANDLE rear door–W & V–	260
HARNESS tail gate	141
Hazard SWITCH	142
HEAD cylinder–H20–	84
HEAD cylinder–J20–	65
HEAD cylinder–L20(A)–	44
HEAD cylinder–L23–	25
HEAD cylinder–L24–	4
HEAD cylinder–SD22–	105
Head LAMP–ICHIKHO–	151
Head LAMP–KOITO–	151A
Head lining CLOTH–SEDAN–	219
Head lining CLOTH–W & V–	249
HEAD REST–SEDAN–	239
HEAD REST–W & V–	268
HEATER room–H20–	144B
HEATER room–J20–	144A
HEATER room–L23,L24 & L20(A)–	144
HEATER room–SD22–	144C
High tension CABLE–H20–	122C
High tension CABLE–J20–	121B
High tension CABLE–L23–	121A
High tension CABLE–L24 & L20(A)–	121
HINGE front door–SEDAN–	228
HINGE front door–W & V–	256
HINGE hood–SEDAN–	213
HINGE hood–W & V–	243
HINGE tail gate	263
HOOD–SEDAN–	213
HOOD–W & V–	243
Hood HINGE–SEDAN–	213
Hood HINGE–W & V–	243
Hood LEDGE–SEDAN–	213
Hood LEDGE–W & V–	243
Hood lock CONTROL–SEDAN–	214
Hood lock CONTROL–W & V–	244
Hood PANEL–SEDAN–	213
Hood PANEL–W & V–	243
HORN electric high	142
HORN electric low	142
Horn RELAY	142
HOSE master vac	198
HUB front	181A
I	
Ignition COIL–H20–	122C
Ignition COIL–J20–	121B
Ignition COIL–L23–	121A
Ignition COIL–L24 & L20(A)–	121
Ignition SWITCH	142
Illumination SWITCH	142
Injection PUMP–SD22–	115
Inspection LAMP	156
Instrument ASH TRAY–SEDAN–	216
Instrument ASH TRAY–W & V–	246
Instrument GARNISH–SEDAN–	217
Instrument GARNISH–W & V–	247
Instrument PAD–SEDAN–	217
Instrument PAD–W & V–	247
Instrument PANEL–SEDAN–	216
Instrument PANEL–W & V–	246
Instrument TRIMMING–SEDAN–	217
Instrument TRIMMING–W & V–	247
INSULATOR dash–SEDAN–	217
INSULATOR dash–W & V–	247
INSULATOR floor–SEDAN–	221
INSULATOR floor–W & V–	251A
INSULATOR hood–SEDAN–	213
INSULATOR hood–W & V–	243
INSULATOR roof–SEDAN–	219
INSULATOR roof–W & V–	249
Intake MANIFOLD–H20–	87
Intake MANIFOLD–J20–	68
Intake MANIFOLD–L20(A)–	47
Intake MANIFOLD–L23–	28
Intake MANIFOLD–L24–	7
Intake MANIFOLD–SD22–	108
Intake VALVE–H20–	86
Intake VALVE–J20–	67
Intake VALVE–L20(A)–	46
Intake VALVE–L23–	27
Intake VALVE–L24–	6
Intake VALVE–SD22–	107
J	
JACK set	274
JET main–carburetor–H20–	89
JET main–carburetor–J20–	70
JET main–carburetor–L23–	30
JET slow–carburetor–H20–	89
JET slow–carburetor–J20–	70
JET slow–carburetor–L23–	30

B–C

© 1972 NISSAN MOTOR CO., LTD.

Printed in Japan.

PART NAME	GROUP NO.
K	
KEY blank	273
KEY cylinder lock	272
Kicking PLATE front–SEDAN–	224
Kicking PLATE front–W & V–	252
Kicking PLATE rear SEDAN–	224
Kicking PLATE rear –W & V–	252
KIT gasket regrined –H20–	82
KIT gasket regrined –J20–	62
KIT gasket regrined –L20(A)–	42
KIT gasket regrined –L23–	22
KIT gasket regrined –L24–	2
KIT gasket regrined –SD22–	102
KIT gasket repair –H20–	82
KIT gasket repair –J20–	62
KIT gasket repair –L20(A)–	42
KIT gasket repair –L23–	22
KIT gasket repair –L24–	2
KIT gasket repair –SD22–	102
KIT oil cooler –L23–	24
KIT tool	274
KNOB lock front door –SEDAN–	232
KNOB lock front door –W & V–	257
L	
LAMP head –ICHIKHO–	151
LAMP head –KOITO–	151A
LAMP inspection	156
LAMP licence –SEDAN–	155
LAMP licence–W & V–	155A
LAMP parking & turn signal	152
LAMP rear –SEDAN–	154
LAMP rear –W & V–	155A
LAMP room	156
LAMP side marker	153
Leaf SPRING rear	184
LEVER shift transmission–R3W71A–	166
LEVER shift transmission –R4W71A–	169
Licence LAMP –SEDAN–	154
Licence LAMP –W & V–	154A
LID glove box –SEDAN–	217
LID glove box –W & V–	247
LID trunk	234
LIGHTER cigarette	142
LINK front suspension	182
LINKAGE steering	203
LOCK cylinder	272
LOCK glove box lid –SEDAN–	217
LOCK glove box lid –W & V–	247
Lock KNOB front door –SEDAN–	229
Lock KNOB front door –W & V–	257
Lock KNOB rear door –SEDAN–	232
Lock KNOB rear door –W & V–	260
LOCK front door –SEDAN–	229
LOCK front door –W & V–	257
LOCK rear door –SEDAN–	232
LOCK rear door –W & V–	260
M	
MANIFOLD exhaust –H20–	87
MANIFOLD exhaust –J20–	68
MANIFOLD exhaust –L20(A)	47
MANIFOLD exhaust –L23–	28
MANIFOLD exhaust –L24–	7
MANIFOLD exhaust –SD22–	108
MANIFOLD intake –H20–	87
MANIFOLD intake –J20–	68
MANIFOLD intake –L20(A)–	47
MANIFOLD intke –L23–	28
MANIFOLD intake –L24–	7
MANIFOLD intake –SD22–	108
MARK –CEDRIC–	271
MARK –CEDRIC 2000–	271
MARK –CEDRIC 2300–	271
MARK –CEDRIC 2400–	271
MARK –DATSUN–	271
MARK –DATSUN 2000–	271
MARK –DATSUN 2300–	271
MARK –DATSUN 2400–	271
MASK radio aperture –SEDAN–	217
MASK radio aperture –W & V–	247
Master VAC	179,197A
Master VAC HOSE	198
MAT –SECAN–	221
MAT –W & V–	251A
MEMBER cross –SEDAN–	220
MEMBER cross –W & V–	250
MEMBER front suspension	182
MEMBER side front –SEDAN–	220
MEMBER side front –W & V–	250
MEMBER side rear –SEDAN–	220
MEMBER side rear –W & V–	250
MIRROR inside back –SEDAN–	219
MIRROR inside back –W & V–	249
MIRROR door –SEDAN–	213
MIRROR door –W & V–	243
MIRROR side –SEDAN–	213
MIRROR side –W & V–	243
Model number PLATE	277
Monkey WRENCH	274
MOTOR starter –H20–	124B
MOTOR starter –J20–	124C

B–C

© 1972 NISSAN MOTOR CO., LTD.

PART NAME	GROUP NO.
MOTOR starter –L20(A)–	124D
MOTOR starter –L23–	124A
MOTOR starter –L24–	124
MOTOR starter –SD22–	124E
MOULDING rear window	227
MOULDING roof drip –SEDAN–	225
MOULDING roof drip –W & V–	254
MOULDING shill –SEDAN–	225
MOULDING shill –W & V–	254
MOULDING tail gate window	263
MOULDING windshield	218
MOUNTING engine	136
MUFFLER	131,131A

N

NAIL ratchet–Hand brake–	191
NIPPLE grease	181A
NISSAN long life COOLANT	275
NUT wing	148
NOZZLE fuel supply	114
Nylon WASHER	191

O

Oil cooler KIT –L23–	23
Oil COOLER –SD22–	104
Oil FILTER –H20–	83
Oil FILTER –J20–	64
Oil FILTER –L20(A)–	43
Oil FILTER –L23–	23
Oil FILTER –L24–	3
Oil FILTER –SD22–	111
Oil PAN –H20–	83
Oil PAN –J20–	64
Oil PAN –L20(A)–	43
Oil PAN –L23–	23
Oil PAN –L24–	3
Oil PAN –SD22–	103
Oil PUMP –H20–	88
Oil PUMP –J20–	69
Oil PUMP –L20(A)–	48
Oil PUMP –L23–	29
Oil PUMP –L24–	8
Oil PUMP –SD22–	109
ORNAMENT	271
Outlet VALVE –H20–	86
Outlet VALVE –J20–	67
Outlet VALVE –L20(A)–	46
Outlet VALVE –L23–	27
Outlet VALVE –L24–	6
Outlet VALVE –SD22–	107

P

Package TRAY –SEDAN–	216
Package TRAY –W & V–	246
PAD roof –SEDAN–	219
PAD roof –W & V–	249
PAD instrument –SEDAN–	217
PAD instrument –W & V–	247
PAINT	215
PANEL body side –SEDAN–	223
PANEL body side –W & V–	252
PANEL cowl –SEDAN–	215
PANEL cowl –W & V–	245
PANEL dash –SEDAN–	216
PANEL dash –W & V–	246
PANEL floor –SEDAN–	220
PANEL floor –W & V–	250
PANEL hood –SEDAN–	213
PANEL hood –W & V–	243
PANEL instrument –SEDAN–	217
PANEL instrument –W & V–	247
PANEL rear	226
PANEL rear door –SEDAN–	231
PANEL rear door –W & V–	259
PANEL roof –SEDAN–	219
PANEL roof –W & V–	249
PAN oil –H20–	83
PAN oil –J20–	64
PAN oil –L20(A)–	43
PAN oil –L23–	23
PAN oil –L24–	3
PAN oil –SD22–	103
Parking & turn signal LAMP	152
PEDAL brake	255
PEDAL clutch	195
PILLAR center –SEDAN–	223
PILLAR center –W & V–	252
PILLAR front	223,252
PIPE exhaust –SEDAN–	131
PIPE exhaust –W & V–	131A
PIPING brake	194
PIPING fuel–DIESEL–	133A
PIPING fuel–GASOLINE–	133
PISTON –H20–	85
PISTON –J20–	66
PISTON –L20(A)–	45
PISTON –L23–	26
PISTON –L24–	5
PISTON –SD22–	106

© 1972 NISSAN MOTOR CO., LTD.

Printed in Japan.

PART NAME	GROUP NO.
PLATE kicking front –SEDAN–	224
PLATE kicking front –W & V–	253
PLATE kicking rear –SEDAN–	224
PLATE kicking rear –W & V–	253
PLATE model number	277
PLIER	274
PLUG spark –H20–	122C
PLUG spark –J20–	122B
PLUG spark –L23–	122A
PLUG spark–L24 & L20(A)–	122
Pneumatic GOVERNOR –SD22–	117
Propeller SHAFT	179
PUMP fuel –H20–	92
PUMP fuel –J20–	73
PUMP fuel –L20(A)	52
PUMP fuel –L23–	33
PUMP fuel –L24–	12
PUMP fuel electric –H20–	92A
PUMP fuel electric –J20–	73A
PUMP fuel electric –L23–	33A
PUMP (1) injection	115
PUMP (2) injection –Feed pump–	116
PUMP (3) injection –Pneumatic governer–	117
PUMP (4) injection –Automatic timer–	118
PUMP oil –H20–	88
PUMP oil –J20–	69
PUMP oil –L20(A)	48
PUMP oil –L23–	29
PUMP oil –L24–	8
PUMP oil –SD22–	109
PUMP water –H20–	93
PUMP water –J20–	74
PUMP water –L20(A)	53
PUMP water –L23–	34
PUMP water –L24–	13
PUMP water –SD22–	119

PART NAME	GROUP NO.
R	
RADIATOR	135
Radiator GRILLE –SEDAN–	212
Radiator GRILLE –W & V–	242
RADIO	147
Radio aperture MASK –SEDAN–	217
Radio aperture MASK –W & V–	247
Rear AXLE	183
Rear BRAKE	139,139A,193B,193C,193D
Rear BUMPER –SEDAN–	234
Rear BUMPER –W & V–	255
Rear corner GARNISH	219
Rear FINISHER	226
Rear door GLASS –SEDAN–	231
Rear door GLASS –W & V–	259
Rear door HANDLE –SEDAN–	232
Rear door HANDLE –W & V–	260
Rear door lock KNOB –SEDAN–	232
Rear door lock KNOB –W & V–	260
Rear door LOCK –SEDAN–	232
Rear door LOCK –W & V–	260
Rear door PANEL –SEDAN–	231
Rear door PANEL –W & V–	259
Rear door SASH –SEDAN–	231
Rear door SASH –W & V–	259
Rear DRUM	183
Rear FENDER –SEDAN–	226
Rear FENDER –W & V–	255
Rear kicking PLATE –SEDAN–	224
Rear kicking PLATE –W & V–	253
Rear LAMP –SEDAN–	154
Rear LAMP –W & V–	154A
Rear PANEL	226
Rear SEAT–Bench type for PERSONAL–	238A
Rear SEAT –Bench type for STD–	238B
Rear SEAT –Bench type VAN–	266

PART NAME	GROUP NO.
Rear SEAT –Bench type for WAGON–	266
Rear SEAT –Semi separate type for DX–	238
Rear side FINISH	253
Rear side MEMBER –SEDAN–	220
Rear side MEMBER –W & V–	250
Rear SUSPENSION	184
Rear window GLASS	227
Rear window MOULDING	227
Rear window WEATHERSTRIP	227
Reclining DEVICE	236
REGULATOR front door –SEDAN–	229
REGULATOR front door –W & V–	257
REGULATOR rear door –SEDAN–	232
REGULATOR rear door –W & V–	260
REGULATOR voltage –H20–	122C
REGULATOR voltage –J20–	122B
REGULATOR voltage –L23–	122A
REGULATOR voltage –L24 & L20(A)	122
RELAY horn	142
Road WHEEL	183
Rocker COVER –H20–	84
Rocker COVER –J20–	65
Rocker COVER –L20(A)	44
Rocker COVER –L23–	25
Rocker COVER –L24–	4
Rocker COVER –SD22–	105
ROD connecting –H20–	85
ROD connecting –J20–	66
ROD connecting –L20(A)	45
ROD connecting –L23–	26
ROD connecting –L24–	5
ROD connecting –SD22–	106
Roof PAD –SEDAN–	219
Roof PAD –W & V–	249
Roof PANEL –SEDAN–	219
Roof PANEL –W & V–	249
Room HEATER –H20–	144B

© 1972 NISSAN MOTOR CO., LTD.

PART NAME	GROUP NO.
Room HEATER –J20–	144A
Room HEATER –L23, L24 & L20(A)	144
Room HEATER –SD22–	144C
Room LAMP	156
RUBBER cowl top –SEDAN–	215
RUBBER cowl top –W & V–	245

S

PART NAME	GROUP NO.
Safty BELT –SEDAN–	239
Safty BELT –W & V–	268
SASH front door –SEDAN–	231
SASH front door –W & V–	256
SASH rear door –SEDAN–	231
SASH rear door –W & V–	259
SEALER –N.C.S–	275
SEAT front –W & V–	265
SEAT front –Bench type for STD–	235B
SEAT front –Separate type for DX–	236
SEAT front –Separate type for STD–	236A
SEAT front –Semi separate type–	238
SEAT rear –Bench type for PERSONAL–	238A
SEAT rear –Bench type for STD–	238B
SEAT rear –Bench type for VAN–	266
SEAT rear –Bench type for WAGON–	266
SEAT rear –Semi separate type for DX–	238
SEAT third	267
SET cylinder lock & key	272
SHADE tail gate window	264
SHAFT propeller	179
Shift LEVER transmission –R3W71A–	166
Shift LEVER transmission –R4W71A–	169
Shill MOULDING –SEDAN–	225
Shill MOULDING –W & V–	254
Side marker LAMP	153
Side MEMBER front –SEDAN–	220
Side MEMBER front –W & V–	251A
Side MEMBER rear –SEDAN–	220
Side MEMBER rear –W & V–	251
Side MIRROR –SEDAN–	213
Side MIRROR –W & V–	243
Side WINDOW	262
Side window SWITCH	142
SPANNER	274
Spark PLUG –H20–	122C
Spark PLUG –J20	122B
Spark PLUG –L23–	122A
Spark PLUG –L24 & L20(A)	122
Spark plug WRENCH	274
SPEEDOMETER	143
Splash BOARD	254
SPRING front	182
SPRING leaf rear	184
Starter MOTOR –H20–	124B
Starter MOTOR –J20–	124C
Starter MOTOR –L20(A)	124D
Starter MOTOR –L23–	124A
Starter MOTOR –L24–	124
Starter MOTOR –SD22–	124E
Steering GEAR	201
Steering gear ARM	203
Steering GEAR –Collapsible type–	202
Steering WHEEL	204
STOPPER tire	274
Stop lamp SWITCH	142
STRAINER fuel –H20–	91
STRAINER fuel –J20–	72
STRAINER fuel –L20(A)	72
STRAINER fuel –L23–	32
STRAINER fuel –L24–	11
STRAP assist –SEDAN–	219
STRAP assist –W & V–	249
SUNVISOR –SEDAN–	219
SUNVISOR –W & V–	249
SUPPORT distributor –H20–	121C
SUPPORT distributor –J20–	121B
SUPPORT distributor –L23–	121A
SUPPORT distributor –L24 & L20(A)	121
SUSPENSION front	182
Suspension LINK front	182
Suspension MEMBER front	182
SUSPENSION rear	184
SWITCH door	142
SWITCH hazard	142
SWITCH ignition & starter	142
SWITCH illumination	142
SWITCH lighting	142
SWITCH side window	142
SWITCH stop lamp	142
SWITCH turn signal & lighting	142
SWITCH washer	142
SWITCH window regulator	142
SWITCH wiper	142

T

PART NAME	GROUP NO.
Tail GATE	263
Tail gate FINISHER	264
Tail gate GARNISH	264
Tail gate PANEL	263
Tail gate window GLASS	263
Tail gate HARNESS	141
Tail gate HINGE	263
TANK fuel–SEDAN–	132

© 1972 NISSAN MOTOR CO., LTD.

Printed in Japan.

PART NAME	GROUP NO.
TANK fuel–W & V–	132A
Third SEAT	267
TIMMER automatic–SD22–	118
TireSTOPPER	274
TOOL kit	274
TOP cowl–SEDAN–	215
TOP cowl–W & V–	245
Torsion BAR tail gate	263
Torsion BAR trunk lid hinge	234
TRANSMISSION assemblies	164,164A
TRANSMISSION assemblies–AUTOMATIC–	171A
Transmission CASE–AUTOMATIC–	172
Transmission CASE–R3W71A–	165
Transmission CASE–R4W71A	168
Transmission CONTROL–AUTOMATIC LD–	178A
Transmission CONTROL–AUTOMATIC RD–	178
Transmission CONTROL–R3W71A LD–	176A
Transmission CONTROL–R3W71A RD–	176
Transmission CONTROL–R4W71A LD–	177A
Transmission CONTROL–R4W71A RD–	177
Transmission GEARS–AUTOMATIC–	174
Transmission GEARS–R3W71A–	166
Transmission GEARS–R4W71A–	169
Transmission gear SHIFTING–R3W71A–	169
Transmission gear SHIFTING–R4W71A–	170
Transmission VALVE BODIES–AUTOMATIC–	175
TRAY battery–SEDAN–	213
TRAY battery–W & V–	243
TRAY Package–SEDAN–	216
TRAY package–W & V–	246
Trim COVER front seat–W & V–	265
Trim COVER front seat–Bench type for STD–	235B
Trim COVER front seat–Separate type for DX–	236
Trim COVER front seat–Separate type for STD–	236A
Trim COVER front seat–Semi separate type–	235A
Trim COVER rear seat–Bench type for PERSONAL	238A
Trim COVER rear seat–Bench type for STD–	238B
Trim COVER rear seat–Bench type for VAN–	266
Trim COVER rear seat–Bench type for WAGON–	266
Trim COVER rear seat –Semi separete type–	238,238A,238B
Trim COVER third seat–WAGON	267
TRUNK	234
Trunk LID	234
Turn signal & lighting SWITCH	142

U

UNIT flasher	142
UNIT fuel gauge–SEDAN–	132
UNIT fuel gauge–W & V–	132A
UNIT shield beam	142

V

VALVE BODIES transmission–AUTOMATIC–	175
VALVE intake–H20–	86
VALVE intake–J20–	67
VALVE intake–L20(A)–	46
VALVE intake–L23–	27
VALVE intake–L24–	6
VALVE intake–SD22–	107
VALVE outlet–H20–	86
VALVE outlet–J20–	67
VALVE outlet–L20(A)–	46
VALVE outlet–L23–	27
VALVE outlet–L24–	6
VALVE outlet–SD22–	107
VENTILATOR air–SEDAN–	215
VENTILATOR air–W & V–	245
VENTURI–SD22–	108
Voltage REGULATOR–H20–	122C
Voltage REGULATOR–J20–	121B
Voltage REGULATOR–L23–	121A
Voltage REGULATOR–L24 & L20(A)–	122

W

Washer SWITCH	142
WASHER windshield	150
Water PUMP–H20–	93
Water PUMP–J20–	74
Water PUMP–L20(A)–	53
Water PUMP–L23–	34
Water PUMP–L24–	13
Water PUMP–SD22–	119
WEATHERSTRIP front door–SEDAN–	228
WEATHERSTRIP front door–W & V–	256
WEATHERSTRIP rear door–SEDAN–	231
WEATHERSTRIP rear door–W & V–	259
WEATHERSTRIP rear window–SEDAN–	227
WEATHERSTRIP tail gate window–W & V–	263
WELT body side–SEDAN–	224
WELT body side–W & V–	253
Wheel nut WRENCH	274
WHEEL road	183
WHEEL steering	204
Window GLASS rear–SEDAN–	227
Window GLASS side	262
Window regulator SWITCH	142
WINDOW side–W & V–	262
WINDSHIELD GLASS	218
Windshield MOULDING–SEDAN–	218
Windshield MOULDING–W & V–	248

© 1972 NISSAN MOTOR CO., LTD.

REVISED: DECEMBER, 1972

PART NAME	GROUP NO.
Windshield WASHER–SEDAN–	150
Windshield WIPER	149
Wiper SWITCH	142
WIPER windshield	149
WIRE listing head lining–SEDAN–	219
WIRE listing head lining–W & V–	249
WRENCH monkey	274
WRENCH spark plug	274
Y	
YOKE flange	179
YOKE hand brake lever	191
YOKE sleeve	179

B–C

© 1972 NISSAN MOTOR CO., LTD.

Printed in Japan.